City of
SANTA CLARITA

NOTICE INVITING BIDS

Newhall Park Pool Pump Room Replacement REBID2

Bid # CIP-25-26-P2021REBID2

TABLE OF CONTENTS

Bid #CIP-25-26-P2021REBID2
Newhall Park Pool Pump Room Replacement REBID2
City Project No. P2021
City of Santa Clarita, California

SECTION A
CITY OF SANTA CLARITA - APPROVAL TO BID
NOTICE INVITING BIDS
DOCUMENT CHECKLIST

SECTION B
BID INSTRUCTIONS
BID CLAUSES

SECTION C
PROPOSAL FORM
NOTICE TO BIDDERS REGARDING CONTRACTUAL REQUIREMENTS
BID SCHEDULE
ALTERNATE BID SCHEDULE
BIDDER'S INFORMATION AND CERTIFICATION
BIDDER'S QUESTIONNAIRE
BIDDER PRE-QUALIFICATION QUESTIONNAIRE
CERTIFICATION OF NON-SEGREGATED FACILITIES
DESIGNATION OF SUBCONTRACTORS
REFERENCES
IRAN CONTRACTING ACT CERTIFICATION
PROPOSAL GUARANTEE BOND/BIDDER'S BOND
NON-COLLUSION AFFIDAVIT

SECTION D
SUBCONTRACTOR CLAUSES

SECTION E
CAPITAL IMPROVEMENT PROJECT AGREEMENT
LABOR AND MATERIAL BOND
FAITHFUL PERFORMANCE BOND
FRINGE BENEFIT STATEMENT

SECTION F
GENERAL & SPECIAL PROVISIONS

EXHIBIT A
EXHIBIT AI - C258 TEMPORARY RECIRCULATION PLANS
EXHIBIT AII - NEWHALL PARK POOL PUMP ROOM BUILDING RENOVATION PLANS – CONSTRUCTION
EXHIBIT AIII - ENGINEERING CD SPECIFICATIONS

EXHIBIT B
SITE AERIAL
P-LOT SPACES
PLOT PLAN OF POOL DECK
C&DMMP FORM

SECTION A

Solicitation Information

Docusign Envelope ID: E3E31B95-C4F5-4F7D-AB27-4232B63CAEC8

APPROVAL TO BID
FOR

Bid #CIP-25-26-P2021REBID2

Newhall Park Pool Pump Room Replacement REBID2

City Project No. P2021

CITY OF SANTA CLARITA
C.I.P. Division
23920 Valencia Boulevard
Santa Clarita, CA 91355

Bids shall be submitted electronically through BidNet to the City of Santa Clarita (CITY) at:
www.bidnetdirect.com//cityofsantaclarita

All information requested therein must be clearly and legibly set forth in the manner and form indicated. The CITY will not consider any proposal not meeting these requirements.

BID CLOSING DATE: May 19, 2026

Approved to Bid:

Signed by:
12A01C67890D43C...

Date: 04/27/2026

Damon Letz, City Engineer

Initial PBH Initial SP

CITY OF SANTA CLARITA NOTICE INVITING BIDS

Project Name: **Newhall Park Pool Pump Room Replacement REBID2**

BID #: **CIP-25-26-P2021REBID2**

City Project Number: **P2021**

Dates Published: **April 28, 2026 & May 5, 2026**

Pre-Bid Meeting: **May 5, 2026 at 9:00 AM (PT)**

Last Day for Questions: **May 11, 2026 before 11:00 AM (PT)**

Bid Closing: **May 19, 2026 before 11:00 AM (PT)**

Engineer's Estimate: **$2,000,000**

License(s) Required: **Class A, or Class B, or C-53 license required.**

Project Description: **The City is seeking services for the replacement of the existing pool pump room. The project consists of selected concrete flatwork and identified pool equipment. Alternate Bid Schedule items include demolition of existing perimeter fencing, installation of new wrought iron fencing and fencing gates, purchase of a NEW Vertical Turbine Pump, installation of the pump, additional concrete flat work, and an Eye Wash Drench Hose. The construction of the replacement pool pump room shall be substantially complete by February 7, 2027, to allow the pool to resume use in time for the opening of summer pool programming.**

Bond Requirements: **Yes**

Contact Information: **Jaclyn Abston | jabston@santaclarita.gov**

Prevailing Wage Monitoring: This Project is subject to prevailing wage compliance monitoring and enforcement by the Department of Industrial Relations.

Required Contractor & Subcontractor Registration: Only bids submitted by bidders (along with all listed subcontractors) that are currently registered and qualified to perform public work pursuant to Labor Code Section 1725.5 will be accepted.

Specifications for this bid may be downloaded from the City's Purchasing website at: www.bidnetdirect.com//cityofsantaclarita. Please refer to specifications for complete details and bid requirements. The specifications in this notice shall be considered a part of any contract made pursuant thereto. A paper copy of the bid documents is available upon request in the City Clerk's office, suite 120.

Bid Questions should be submitted electronically via BidNet "Question and Answer" tab.

Addenda, if issued by the CITY, will be transmitted on BidNet. Addenda must be digitally acknowledged via BidNet in addition to a printed and signed version submitted with the bid. **If addenda are not signed and submitted with the bid proposal, the bid may be deemed non-responsive and rejected.**

DOCUMENT CHECKLIST

Bid #CIP-25-26-P2021REBID
Newhall Park Pool Pump Room Replacement
REBID2 City Project No. P2021
City of Santa Clarita, California

The following documents must be completed and submitted by the bidder as per the outlined timeframes.

The following documents must be provided by ALL bidders:

Uploaded via BidNet (see Section C)

- ❑ Proposal Form
- ❑ Notice to Bidders Regarding Contractual Requirements
- ❑ Alternate Bid Schedule
- ❑ Bidder's Information and Certification
- ❑ Bidder's Questionnaire
- ❑ Bidder's Pre-Qualification Questionnaire
- ❑ Certification of Non-Segregated Facilities
- ❑ Designation of Subcontractors
- ❑ References
- ❑ Iran Contracting Act Certification
- ❑ Non-Collusion Affidavit
- ❑ All signed addendums (if any)

Delivered to City Hall, Attn: Purchasing, Suite 120 prior to bid closing:

- ❑ Proposal Guarantee Bond/Bidder's Bond (Notarized)

The following documents must be provided by the AWARDEE ONLY (With Agreement)
Delivered to City Hall, Attn: Peter Henne

- ❑ Capital Improvement Project Agreement
- ❑ Faithful Performance Bond (Notarized)
- ❑ Labor & Material Bond (Notarized)
- ❑ Insurance Required by Contract
- ❑ W9
- ❑ Fringe Benefit Statement

SECTION B

Bid Instructions and Bid Clauses

BID INSTRUCTIONS

Bid #CIP-25-26-P2021REBID2
Newhall Park Pool Pump Room Replacement REBID2
City Project No. P2021
City of Santa Clarita, California

1. **SUBMITTING BIDS.** The bid response must be submitted on this form and include all forms provided or information requested or required by the scope of work or specifications, (uploaded via BidNet):

   www.bidnetdirect.com//cityofsantaclarita

1.1. Proposals/corrections received after the bid closing time will not be accepted. The City will not be responsible for bids not properly or timely, uploaded. Upon award, all submissions become a matter of public record.

1.2. Notarized Forms - An original, notarized Proposal Guarantee Bid Bond and Bid Security Form for Check or Bond to Accompany Bid must be submitted as a hard-copy original. This document must be received at the address specified below no later than the bid due date and time for the vendor to be considered responsive. This document is to be received in a separately sealed envelope clearly marked with title of content, vendor's name and address, and bid number.

   City of Santa Clarita
   ATTN: Purchasing
   23920 Valencia Blvd, Suite 120
   Santa Clarita, CA 91355

1.3. Pricing must be entered into line items section of BidNet. All documentation of unit pricing or other cost breakdowns as outlined in this bid shall be submitted to support the total bid price. All bid amounts will be deemed to include any applicable taxes (Sales Tax, Use Tax, or any other tax). In the case of any pricing entered elsewhere that conflicts with what is entered on BidNet, the numbers entered on BidNet shall govern.

2. **BID OPENING**. The City publicly opens bids online via BidNet at the time shown on the "CITY OF SANTA CLARITA NOTICE INVITING BIDS."

3. **PRE-BID MEETING. A non-mandatory, pre-bid meeting to discuss the required scope of work will be held via Zoom at 9:00 AM (PT) on May 5, 2026. Details below:**
   https://santaclarita.zoomgov.com/j/1612167384
   Meeting ID: 161 216 7384
   Passcode: 613345

4. **BID QUESTIONS.** Questions shall be submitted and responses provided electronically through the BidNet platform in accordance with the date and time shown on the "CITY OF SANTA CLARITA NOTICE INVITING BIDS."

5. **BONDS**. Bid bonds shall be furnished by all Bidders in the amount of at least 10% of the total value of the bid to guarantee that Bidders will enter into contract to furnish goods or services at prices stated. The bonding company must be listed on Treasury Circular 570 and licensed to operate in the state of

California. Likewise, a Faithful Performance Bond and a Labor and Material Bond shall be required of the successful Bidder when stated in the specification.

6. **ADDENDA**. The City will not accept responsibility for incomplete packages or missing addenda. All addenda will be issued through the BidNet platform, and it is the Bidder's responsibility to monitor BidNet for release of the addenda prior to submission of the quote to make certain the package is complete and all required addenda are included. All official information and guidance will be provided as part of this solicitation or written addenda and Bidders are cautioned against relying on verbal information in preparation of the bid response. Addenda must be digitally acknowledged through BidNet in addition to a printed and signed version submitted with the bid. If addenda are not signed and submitted with the quote response, the bid may be deemed non-responsive and rejected.

7. **INSPECTION OF WORKSITE**. Bidders are encouraged to inspect the worksite, by personal examination or by such other means, of the location of the proposed work and the actual conditions of the worksite. If, during the course of examination, a Bidder finds facts or conditions which conflict with the bid documents, he/she shall submit questions for clarification via BidNet.

   The submission of any received bid shall constitute an acknowledgement that any necessary site inspection has taken place. No claim for additional compensation will be allowed which is based upon lack of knowledge of the work site.

8. **INTERPRETATION OF CONTRACT DOCUMENTS**. Errors, omissions, or discrepancies found in the plans, specifications, or other contract documents shall be called to the attention of the City and clarified by the last day for questions. No oral interpretation will be made to any Bidder as to the meaning of the Contract Documents. All questions should be submitted via BidNet platform.

9. **BRAND NAMES, ALTERNATIVES, OR EQUIVALENTS**. In the bid documents, the use of a specific manufacturer, brand or make does not restrict Bidders in their proposed solution. When brand names are used, it indicates the quality and utility of the article desired; thus, the bids submittal shall in all cases propose goods equal in quality and utility.

   If Materials differing from stated specifications may be considered, provided such differences are clearly noted and described. The City shall make the final determination of compliance with the specifications. If proposing an alternative or equivalent product, the Bidder shall provide the cut sheet/spec sheet or detailed product description for the proposed product via email to purchasing@santa-clarita.com prior to the last day for questions. For each product proposed documentation provided must include a description reflecting the characteristics and level of quality that will satisfy the salient physical, functional, or performance characteristics of "equal" products specified in the solicitation. The proposal must clearly identify the item by brand name (if any), and make/model number, and may include descriptive literature such as illustrations, drawings, or a clear reference to previously furnished descriptive data or information available to the City. The proposal shall clearly describe any modifications the Bidder plans to make in a product to make it conform to the solicitation requirements.

   The City has the option of accepting or rejecting any alternative or equivalent product. Exception is made on those items wherein identical supply has been determined a necessity and the notation NO SUBSTITUTE has been used in the specification section.

10. **NON-DISCRIMINATION**. In the performance of this Contract, Bidder shall not discriminate in recruiting, hiring, promotion, demotion, or termination practices on the basis of race, religious creed, color, national origin, ancestry, sex, age, or physical handicap and shall comply with the provisions of the California Fair Employment & Housing Act (Government Code Section 12900, *et seq*.), the Federal Civil Rights Act of 1964 (P.L. 88-352) and all amendments thereto, Executive Order No. 11246 (30 Federal Register 12319), and all administrative rules and regulations issued pursuant to said Acts and Order. Bidder shall likewise require each subcontractor to comply with this paragraph and shall include in each such subcontract language similar to this paragraph.

11. **PROTECTION OF RESIDENT WORKERS**. The City actively supports the Immigration and Nationality Act (INA) which includes provisions addressing employment eligibility, employment verification, and nondiscrimination. Under the INA, employers may hire only persons who may legally work in the United States (i.e., citizens and nationals of the U.S.) and aliens authorized to work in the U.S. The employer must verify the identity and I-9 employment eligibility of anyone to be hired, which includes completing the Employment Eligibility Verification Form (I-9). The Bidder shall establish appropriate procedures and controls so no services or products under the Contract Documents will be performed or manufactured by any worker who is not legally eligible to perform such services or employment.

12. **BID VALIDITY.** All bids, including all pricing, shall be effective/valid for a minimum period of 120 calendar days after the date of bid closing. In the event a final contract has not been awarded within this period, the City reserves the right to negotiate extensions to this period.

13. **AWARD OF CONTRACT**. If the City awards the contract, the award is made to the lowest responsible and responsive Bidder. This is determined solely by the City. Additionally, the City reserves the right to reject any or all bids, to waive (or not waive) any irregularity, and to take the bids under advisement for a period of ninety (90) days, all as may be required to provide for the best interests of the City. In no event will an award be made until all necessary investigations are made as to the responsibility and qualifications of the Bidder to whom the award is contemplated. All bids will be compared with the Engineer's Estimate.

    The acceptance of a bid will be evidenced by a Notice of Award of Contract in writing, delivered to the Bidder whose bid is accepted. All other unsuccessful Bidders will also receive notification. This correspondence may be issued via BidNet. No other act of the City shall constitute acceptance of a bid. The award of contract shall obligate the Bidder, whose bid is accepted to furnish all required bonds, as well as evidences of insurance and execute the contract set forth herein.

    The successful Bidder will be required to furnish a Labor and Material Bond in an amount equal to one hundred percent (100%) of the Contract price and a Faithful Performance Bond in an amount equal to one hundred percent (100%) of the Contract price. Also, the successful Bidder will be required to submit worker's compensation insurance, and liability insurance with the contract. Surety bonds shall be signed by a guaranty or surety company listed in the latest issue of the U.S. Treasury Circular 570 and satisfactory to the City.

    The determination of lowest bid shall be based upon Base bid <u>only</u>.

    The City reserves the right to add any applicable additive or deductive alternates via change order at any time during the project up to the last contract working day. The bidder agrees to hold all unit prices bid for alternates constant throughout the project's duration up to the last contract working

day. No additional compensation for alternates added by change order will be allowed beyond the amount shown on the original bid.

Increases or decreases in work quantities within the specified limits shall not invalidate the unit bid or contract prices. The bidder shall not claim any loss of anticipated profits because of any alteration or variation between the approximate quantities and the quantities of work as done. The City reserves the right to increase or decrease the amount of any or all of the approximate quantity shown in the Bid Schedule and to add or delete the type and extent of work identified and summarized.

Bidders are also directed to the provisions in "Award and Execution of Contract" of the Standard Specification of Public Works Construction (SSWPC) latest edition, and in the General Provisions of this document.

Finally, the City reserves the right to reject any and all bids, or delete portions of any and all bids, or waive any irregularity in the bid not affected by law.

14. **WITHDRAWAL OF BIDS PER PUBLIC CONTRACT CODE**. A bid may be withdrawn by a written request signed by the Bidder. Such requests must be delivered by certified mail to the Purchasing Agent to the address below. Failure to comply may result in forfeit of bid bond.

    City of Santa Clarita
    ATTN: Purchasing
    23920 Valencia Blvd, Suite 120
    Santa Clarita, CA 91355

15. **ASSIGNMENT OF CONTRACT**. The Contract may not be assigned without the written consent of the City, provided that this shall not preclude the assignment of the Contract as security or the assignment of the whole or any part of the proceeds of the Contract including monies, assessment, partial assessment, reassessment, or any bonds which may be issued and represent any assessment or reassessment due or to be due under the Contract.

    Before entering into a Contract, the successful Bidder shall furnish a statement of the company's financial condition and previous construction experience or such evidence of his qualifications as may be required by the City.

16. **CONTRACTOR LICENSE.** The successful Bidder shall provide the required license(s) listed on the Notice Inviting Bids, at the time of bid closing. The successful Bidder must be properly licensed as a contractor from contract award through contract completion (Public Contract Code § 10164). Bidders shall be licensed in accordance with the provisions of Chapter 9, Division 3, of the Business and Professions Code.

17. **DEPARTMENT OF INDUSTRIAL RELATIONS REQUIREMENTS**. No Bidder or subcontractor may be listed on a bid proposal for a public works project (submitted on or after March 1, 2015) unless registered with the Department of Industrial Relations pursuant to Labor Code Section 1725.5 [with limited exceptions from this requirement for bid purposes only under Labor Code Section 1771.1(a)]. No BIDDER or subcontractor may be awarded a contract for public work on a public works project (awarded on or after April 1, 2015) unless registered with the Department of Industrial Relations

pursuant to Labor Code Section 1725.5. This project is subject to compliance monitoring and enforcement by the Department of Industrial Relations.

18. **REQUIRED CONTRACTOR AND SUBCONTRACTOR REGISTRATION.**

18.1. Owner shall accept Bids only from Bidders that (along with all Subcontractors listed in Document 00 4330 (Subcontractors List) are currently registered and qualified to perform public work pursuant to Labor Code Section 1725.5.

18.2. Subject to Labor Code Sections 1771.1(c) and (d), any Bid not complying with paragraph A. above shall be returned and not considered; provided that if Bidder is a joint venture (Business & Professions Code Section 7029.1) or if federal funds are involved in the Contract (Labor Code Section 1771.1(a)), Owner may accept a non-complying Bid provided that Bidder and all listed Subcontractors are registered at the time of Contract award.

18.3. Pursuant to Labor Code Section 1771(a), Contractor represents that it and all of its Subcontractors are currently registered and qualified to perform public work pursuant to Labor Code Section 1725.5. Contractor covenants that any additional or substitute Subcontractors will be similarly registered and qualified.

19. **PREVAILING WAGES**. This contract is subject to the State prevailing wage requirements of the California Labor Code including, but not limited to, Sections 1770, 1771.5, 1773, 1776 and 1777.5. Contractor shall comply with California prevailing wage laws including, to the extent applicable, Labor Code Section 1720.9. Pursuant to Section 1773 of the Labor Code, the general prevailing wage rates in the county, or counties, in which the work is to be done have been determined by the Director of the California Department of Industrial Relations. These wages are set forth in the General Prevailing Wage Rates for this project, available from the California Department of Industrial Relations' Internet web site at http://www.dir.ca.gov/OPRL/DPreWageDetermination.htm. Future effective general prevailing wage rates which have been predetermined and are on file with the California Department of Industrial Relations are referenced but not printed in the general prevailing wage rates. A copy of the prevailing rate of per diem wages shall be posted at the job site. The Contractor is responsible for obtaining a current edition of all California statutes and regulations, and adhering to the latest editions of such.

20. **SCOPE OF WORK/SPECIFICATION MODIFICATIONS**. The right is reserved, as the interest of the City may require, to amend the specifications or drawings before the bid closing date. Such revisions and amendments, if any, will be announced by an addendum or addenda. Copies of such addenda as may be issued, will be furnished to all prospective Bidders. If the revisions and amendments require material changes in quantities or price bid, or both, the date set for bid closing may be postponed by such number of days as, in the opinion of the City, will enable Bidders to revise their bids. In such cases, the addendum will include an announcement of the new date for bid closing.

    The Bidder is required to acknowledge all issued addendums at the time of bid closing. Please sign and return all submitted addendums to avoid disqualification of the submitted bid. It is the Bidder's responsibility to ensure all addendums have been received before the bid closing.

21. **SUBCONTRACTORS REQUIREMENTS**. Each Bidder must submit the Designation of Subcontractors form with their bid. No bid shall be considered unless it is included with the bid submission. Please see Section D: Subcontractor Information for more information.

22. **MANDATORY REQUIREMENTS**. All requirements, submittals, or subsequent communications shall be considered mandatory.

23. **EXAMINATION OF CONTRACT DOCUMENTS.**

23.1. Bidder shall scrutinize the entire site of work, including but not restricted to any corresponding or associated conditions and encumbrances related, the plans and specifications, bid documents, and contract forms therefore. The submission of a bid shall be conclusive evidence that Bidder has investigated and is satisfied as to the conditions to be encountered, as to the character, quality, and scope of the work to be performed, the quantities of material to be furnished, and as to the requirements of the proposal, plans, specifications, and other contract documents.

23.2. Bidders must satisfy themselves by examining the work site, plans, specifications, and other contract documents, and by any other means as they may believe necessary, as to the actual physical conditions, requirements, and difficulties under which the work must be performed. No Bidder shall at any time after submission of a proposal make any claim or assertion that there was any misunderstanding or lack of information regarding the nature or amount of work necessary for the satisfactory completion of the job. Errors, omissions, or discrepancies found in the plans, specifications, or other contract documents shall be called to the attention of the City as instructed and with the date and time given for Bidders' questions in the most current CITY OF SANTA NOTICE INVITING BIDS or as updated in any addenda.

24. **PROTEST PROCEDURES.** Any person or entity may present a formal protest to the City concerning solicitations being conducted by staff.

24.1.1. Definitions

"Bidder" means any person or firm providing a timely, written response to the City solicitation.

"Bid Protest" means any protest with regard to the response submitted by another Bidder.

"Response" means the written response to the City solicitation provided by a person or firm.

"Solicitation Protest" means a statement of protest, dispute, challenge, disagreement, disapproval or other objection regarding documents, determinations or actions taken or contemplated by the City with respect to a solicitation.

"Solicitation" means the document by which the City identifies goods, equipment, services or public construction projects for which it seeks a response.

24.1.2. Format- The protest must be in writing and include the following information at a minimum:

24.1.2.1. The name, address and phone number of the protester, or the authorized representative of the protester;

24.1.2.2. The signature of the protester or authorized representative of the protester;

24.1.2.3. The solicitation number and title under which the protest is submitted;

24.1.2.4. A detailed description of the legal or factual grounds for the protest and all supporting documentation. For protests containing elements not based on publicly released information the protest must have documentation clearly showing the date on which the protester received the information; and

24.1.2.5. The form of relief requested.

24.1.3. Solicitation Protests- Protests of any kind regarding the solicitation including, but not limited to, specifications, scope of work or process, must be received by the City's Purchasing Agent not more than five calendar days after the last day for questions or the last addendum is issued, whichever is later. The decision by the Purchasing Agent on any solicitation protest shall be final.

24.1.4. Bid Protest and Review

24.1.4.1. The protest, in the Format specified above, must be submitted to the City Manager by email or by personal delivery or overnight mail (to City Hall, 23920 Valencia Boulevard, Suite 120, Santa Clarita, CA 91355) so that it is received by the City no later than seven calendar days after the bid closing.

24.1.4.2. A copy of the protest must be served upon the Bidder subject to the protest in the same manner by which the protest was submitted to the City Manager. Failure to serve the protest upon the Bidder subject to the protest is grounds upon which the City may deny the protest.

24.1.4.3. A Bidder whose bid has been protested by another bidder may submit to the City Manager a written response to the protest by email or by personal delivery or overnight mail (to City Hall, 23920 Valencia Boulevard, Suite 120, Santa Clarita, CA 91355) so that it is received by the City no later than seven calendar days after the protesting Bidder has served the protest.

24.1.4.4. The City Manager or designee shall have up to ten calendar days to decide whether to approve or reject the protest. The written decision of the City Manager or designee on the protest shall be served upon the protesting Bidder and any Bidder subject to the protest within 14 calendar days of receipt of the bid protest. The City Manager or designee may extend the 10 calendar days if necessary to review additional information requested from any Bidder.

24.1.4.5. The decision of the City Manager or designee on the bid protest shall be final with no further review.

24.1.5. State or Federal Funding

24.1.5.1. If the subject matter of the solicitation or project is receiving any State or Federal funds which requires a protest procedure different than the procedures stated above, then that protest procedure shall control.

24.1.5.2. In the event there is any lawsuit filed against the City relating to any federally funded project, the City will provide prompt notice of that lawsuit to all agencies who participated in the funding of the project.

24.1.6. Mandatory Procedure- This administrative procedure and the time limits set forth herein are mandatory. Failure to comply with these mandatory procedures shall constitute a waiver of any right to pursue the bid protest, including filing a Government Code claim or any legal proceedings or actions.

The City of Santa Clarita's "Terms and Conditions" is found on a separate attachment in BidNet.

BID CLAUSES

Bid #CIP-25-26-P2021REBID2
Newhall Park Pool Pump Room
Replacement REBID2
City Project No. P2021
City of Santa Clarita, California

1. **BID RIGGING.** The U.S. Department of Transportation (DOT) provides a toll-free hotline to report bid rigging activities. Use the hotline to report bid rigging, Bidder collusion, and other fraudulent activities. The hotline number is (800) 424-9071. The service is available 24 hours 7 days a week and is confidential and anonymous. The hotline is part of the DOT's effort to identify and investigate highway construction contract fraud and abuse and is operated under the direction of the DOT Inspector General.

2. **DISQUALIFICATION OF BIDDERS**. In the event that any Bidder acting as a prime contractor has an interest in more than one bid, all such bids will be rejected, and the Bidder will be disqualified. This restriction does not apply to subcontractors or suppliers who may submit quotations to more than one Bidder and, while doing so, may also submit a formal bid as a prime contractor. A contractor or subcontractor shall not be qualified to bid on, be listed in a bid proposal, subject to the requirements of Section 4104 of the Public Contract Code, or engage in the performance of any contract for public work, as defined in this chapter, unless currently registered and qualified to perform public work pursuant to Section 1725.5. It is not a violation of this section for an unregistered contractor to submit a bid that is authorized by Section 7029.1 of the business and Professions Code or by Section 10164 or 20103.5 of the Public Contract Code, provided the contractor is registered to perform public work pursuant to Section 1725.5 at the time the contract is awarded. Labor Code Section 1771.1(a) requires contractors and their subcontractors to possess and maintain such registration with DIR in order to be awarded and to perform on public works projects (regardless of funding source). Any Bidder which has been debarred by any PUBLIC City in the last ten (10) years is deemed not to be a qualified Bidder for the purposes of this project.

   The City may conduct investigations as it deems necessary to assist in the evaluation of any bid and to establish the responsibility, qualifications and financial ability of the Bidder to do the work in accordance with the Contract Documents to the City's satisfaction within the prescribed time. To determine the degree of responsibility to be credited to the Bidder, the City will weigh any evidence including but not limited to evidence of suspension, debarment, exclusion, or determination of ineligibility by any other City. Any Bidder which is currently debarred by any public agency is deemed not to be a qualified Bidder for the purposes of this project.

   If in the opinion of the City, a Bidder is determined to be insufficiently qualified, then that bid will not be considered for award of the contract.

3. **DEBARMENT AND SUSPENSION**. **Certification Regarding Debarment, Suspension, and Other Responsibility Matters- Lower Tier Covered Transactions. Instructions for Certification:**

   3.1.1. By signing and submitting this bid, the prospective lower tier participant is providing the signed certification set out below.

   3.1.2. The certification in this clause is a material representation of fact upon which reliance was placed when this transaction was entered into. If it is later determined that the prospective

lower tier participant knowingly rendered an erroneous certification, in addition to other remedies available to the Federal Government, the City may pursue available remedies, including suspension and/or debarment.

3.1.3. The prospective lower tier participant shall provide immediate written notice to the City if at any time the prospective lower tier participant learns that its certification was erroneous when submitted or has become erroneous by reason of changed circumstances.

3.1.4. The terms "covered transaction," "debarred," "suspended," "ineligible," "lower tier covered transaction," "participant," "persons," "lower tier covered transaction," "principal," "proposal," and "voluntarily excluded," as used in this clause, have the meanings set out in the Definitions and Coverage sections of rules implementing Executive Order 12549 [49 CFR Part 29]. You may contact the City of Santa Clarita for assistance in obtaining a copy of those regulations.

3.1.5. The prospective lower tier participant agrees by submitting this proposal that, should the proposed covered transaction be entered into, it shall not knowingly enter into any lower tier covered transaction with a person who is debarred, suspended, declared ineligible, or voluntarily excluded from participation in this covered transaction, unless authorized in writing by the City.

3.1.6. The prospective lower tier participant further agrees by submitting this bid that it will include the clause titled "Certification Regarding Debarment, Suspension, Ineligibility and Voluntary Exclusion - Lower Tier Covered Transaction", without modification, in all lower tier covered transactions and in all solicitations for lower tier covered transactions.

3.1.7. A participant in a covered transaction may rely upon a certification of a prospective participant in a lower tier covered transaction that it is not debarred, suspended, ineligible, or voluntarily excluded from the covered transaction, unless it knows that the certification is erroneous. A participant may decide the method and frequency by which it determines the eligibility of its principals. Each participant may, but is not required to, check the Non-procurement List issued by U.S. General Service Administration.

3.1.8. Nothing contained in the foregoing shall be construed to require establishment of system of records in order to render in good faith the certification required by this clause. The knowledge and information of a participant is not required to exceed that which is normally possessed by a prudent person in the ordinary course of business dealings.

3.1.9. Except for transactions authorized under Paragraph 5 of these instructions, if a participant in a covered transaction knowingly enters into a lower tier covered transaction with a person who is suspended, debarred, ineligible, or voluntarily excluded from participation in this transaction, in addition to all remedies available to the Federal government, the City may pursue available remedies including suspension and/or debarment.

3.2. **Certification Regarding Debarment, Suspension, Ineligibility and Voluntary Exclusion - Lower Tier Covered Transaction**

3.2.1. The prospective lower tier participant certifies, by submission of this bid, that neither it nor its "principals" as defined at 49 C.F.R suspended, proposed for debarment, declared

ineligible, or voluntarily excluded from participation in this transaction by any Federal department or agency.

3.2.2. When the prospective lower tier participant is unable to certify to the statements in this certification, such prospective participant shall attach an explanation to this bid.

4. **LEGAL RESPONSIBILITIES**. Proposals must be submitted, filed, made, and executed in accordance with State and Federal laws relating to bids for contracts of this nature, whether the same are expressly referred to herein or not. Bidders submitting a proposal shall, by such action thereby, agree to each and all of the terms, conditions, provisions, and requirements set forth, contemplated, and referred to in the plans, specifications, and other contract documents, and to full compliance therewith.

5. **UNFAIR BUSINESS PRACTICES CLAIMS: ASSIGNMENT TO AWARDING BODY**. Pursuant to Section 7103 of the Public Contracts Code, the contract to be awarded will be defined as a "public works contract." In entering into a public works contract or a subcontract to supply goods, services, or materials pursuant to a public works contract, the Bidder or subcontractor offers and agrees to assign to the awarding body all rights, title, and interest in and to all causes of action it may have under Section 4 of the Clayton Act (15 U.S.C. Sec 15) or under the Cartwright Act (Chapter 2 commencing with B-12 Section 16700, of Part 2 of Division 7 of the Business and Professions Code), arising from purchases of goods, services, or materials pursuant to the public works contract or the subcontract. This assignment shall be made and become effective at the time the awarding body tenders final payment to the Bidder, without further acknowledgment by the parties.

6. **CHANGED CONDITIONS**.

6.1. Differing Site Conditions

6.1.1. During the progress of the work, if subsurface or latent physical conditions are encountered at the site differing materially from those indicated in the contract or if unknown physical conditions of an unusual nature, differing materially from those ordinarily encountered and generally recognized as inherent in the work provided for in the contract, are encountered at the site, the party discovering such conditions shall promptly notify the other party in writing of the specific differing conditions before the site is disturbed and before the affected work is performed.

6.1.2. Upon written notification, the engineer will investigate the conditions, and if it is determined that the conditions materially differ and cause an increase or decrease in the cost or time required for the performance of any work under the contract, an adjustment, excluding anticipated profits, will be made and the contract modified in writing accordingly. SSPWC (Standard Specifications for Public Works Construction) of the contract is warranted.

6.1.3. No contract adjustment which results in a benefit to the contractor will be allowed unless the contractor has provided the required written notice.

6.1.4. No contract adjustment will be allowed under this clause for any effects caused on unchanged work. (This provision may be omitted by the Local Agency, at their option.)

6.2. Suspensions of Work Ordered by the Engineer

6.2.1. If the performance of all or any portion of the work is suspended or delayed by the engineer in writing for an unreasonable period of time (not originally anticipated, customary, or inherent to the construction industry) and the contractor believes that additional compensation and/or contract time is due as a result of such suspension or delay, the contractor shall submit to the engineer in writing a request for adjustment within 7 calendar days of receipt of the notice to resume work. The request shall set forth the reasons and support for such adjustment.

6.2.2. Upon receipt, the engineer will evaluate the contractor's request. If the engineer agrees that the cost and/or time required for the performance of the contract has increased as a result of such suspension and the suspension was caused by conditions beyond the control of and not the fault of the contractor, its suppliers, or subcontractors at any approved tier, and not caused by weather, the engineer will make an adjustment (excluding profit) and modify the contract in writing accordingly. The contractor will be notified of the engineer's determination whether or not an adjustment of the contract is warranted.

6.2.3. No contract adjustment will be allowed unless the contractor has submitted the request for adjustment within the time prescribed.

6.2.4. No contract adjustment will be allowed under this clause to the extent that performance would have been suspended or delayed by any other cause, or for which an adjustment is provided or excluded under any other term or condition of this contract.

6.3. Significant Changes in the Character of Work

6.3.1. The engineer reserves the right to make, in writing, at any time during the work, such changes in quantities and such alterations in the work as are necessary to satisfactorily complete the project. Such changes in quantities and alterations shall not invalidate the contract nor release the surety, and the contractor agrees to perform the work as altered.

6.3.2. If the alterations or changes in quantities significantly change the character of the work under the contract, whether such alterations or changes are in themselves significant changes to the character of the work or by affecting other work cause such other work to become significantly different in character, an adjustment, excluding anticipated profit, will be made to the contract. The basis for the adjustment shall be agreed upon prior to the performance of the work. If a basis cannot be agreed upon, then an adjustment will be made either for or against the contractor in such amount as the engineer may determine to be fair and equitable.

6.3.3. If the alterations or changes in quantities do not significantly change the character of the work to be performed under the contract, the altered work will be paid for as provided elsewhere in the contract.

6.3.4. The term “significant change” shall be construed to apply only to the following circumstances:

6.3.4.1. When the character of the work as altered differs materially in kind or nature from that involved or included in the original proposed construction; or

6.3.4.2. When a major item of work, as defined elsewhere in the contract, is increased in excess of 125 percent or decreased below 75 percent of the original contract quantity. Any allowance for an increase in quantity shall apply only to that portion in excess of 125 percent of original contract item quantity, or in case of a decrease below 75 percent, to the actual amount of work performed.

7. **QUALITY ASSURANCE**. The Agency uses a Quality Assurance Program (QAP) to ensure a material is produced to comply with the Contract. You may examine the records and reports of tests the Agency performs if they are available at the job site. Schedule work to allow time for QAP.

8. **TAXES**. No mention shall be made in the proposal of Sales Tax, Use Tax, or any other tax, as all amounts bid will be deemed and held to include any such taxes which may be applicable.

9. **NONDISCRIMINATION**. In the performance of this Contract, Bidder shall not discriminate in recruiting, hiring, promotion, demotion, or termination practices on the basis of race, religious creed, color, national origin, ancestry, sex, age, or physical handicap and shall comply with the provisions of the California Fair Employment & Housing Act (Government Code Section 12900, et seq.), the Federal Civil Rights Act of 1964 (P.L. 88-352) and all amendments thereto, Executive Order No. 11246 (30 Federal Register 12319), and all administrative rules and regulations issued pursuant to said Acts and Order. The contractor shall carry out applicable requirements of Title 49 CFR (Code of Federal Regulations) part 26 in the award and administration of US DOT assisted contracts. Bidder shall likewise require each subcontractor to comply with this paragraph and shall include in each such subcontract language similar to this paragraph. Failure by the contractor to carry out these requirements is a material breach of this contract, which may result in the termination of this contract or such other remedy, as the recipient deems appropriate.

10. **SPECIAL PROVISIONS**. Failure of the Bidder to fulfill the requirements of the Special Provisions for submittals required to be furnished after bid closing, including but not limited to escrowed bid documents, where applicable, may subject the Bidder to a determination of the Bidder's responsibility in the event it is the apparent low Bidder on future public works contracts.

SECTION C

Bid Submittals

PROPOSAL FORM

Bid #CIP-25-26-P2021REBID2
Newhall Park Pool Pump Room Replacement REBID2
City Project No. P2021
City of Santa Clarita, California

TO THE CITY OF SANTA CLARITA, AS CITY:

In accordance with CITY's NOTICE INVITING BIDS, the undersigned BIDDER hereby proposes to furnish all materials, equipment, tools, labor, and incidentals required for the above-stated project as set forth in the plans, specifications, and contract documents therefore, and to perform all work in the manner and time prescribed therein.

BIDDER declares that this proposal is based upon careful examination of the work site, plans, specifications, INSTRUCTIONS TO BIDDERS, and all other contract documents. If this proposal is accepted for award, BIDDER agrees to enter into a contract with CITY at the unit and/or lump sum prices set forth in the following BID SCHEDULE. BIDDER understands that failure to enter into a contract in the manner and time prescribed will result in forfeiture to CITY of the proposal guarantee accompanying this proposal.

BIDDER understands that a bid is required for the entire work that the estimated quantities set forth in BID SCHEDULE are solely for the purpose of comparing bids, and that final compensation under the contract will be based upon the actual quantities of work satisfactorily completed. THE CITY RESERVES THE RIGHT TO INCREASE OR DECREASE THE AMOUNT OF ANY QUANTITY SHOWN AND TO DELETE ANY ITEM FROM THE CONTRACT. It is agreed that the unit and/or lump sum price(s) bid include all appurtenant expenses, taxes, royalties, and fees for the project's duration. In case of discrepancies in the amounts bid, unit prices shall govern over extended amounts, and words shall govern over figures.

If awarded the contract, the undersigned further agrees that in the event of the Bidder's default in executing the required contract and filing the necessary bonds and insurance certificates within ten working days after the date of the CITY's notice of award of contract to the BIDDER, the proceeds of the security accompanying this bid shall become the property of the CITY and this bid and the acceptance hereof may, at the CITY's option, be considered null and void.

Company Name: _____

Company Address: _____

_____

Phone: _____

Email: _____

By: _____
Print Name

Title: _____

Signature: _____

Date: _____

NOTICE TO BIDDERS REGARDING CONTRACTUAL REQUIREMENTS

Bid #CIP-25-26-P2021REBID2
Newhall Park Pool Pump Room Replacement REBID2
City Project No. P2021
City of Santa Clarita, California

SUMMARY OF INDEMNITY AND INSURANCE REQUIREMENTS

1. These are the Indemnity and Insurance Requirements for Contractors providing services or supplies to City of Santa Clarita (City). By agreeing to perform the work or submitting a proposal, you verify that you comply with and agree to be bound by these requirements. If any additional Contract documents are executed, the actual Indemnity language and Insurance Requirements may include additional provisions as deemed appropriate by City's Purchasing Agent.

The City reserves the sole right to accept or reject any requests for modifications to these terms.

2. You should check with your Insurance advisors to verify compliance and determine if additional coverage or limits may be needed to adequately insure your obligations under this agreement. These are the minimum required and do not in any way represent or imply that such coverage is sufficient to adequately cover the Contractor's liability under this agreement. The full coverage and limits afforded under Contractor's policies of Insurance shall be available to Buyer and these Insurance Requirements shall not in any way act to reduce coverage that is broader or includes higher limits than those required. The Insurance obligations under this agreement shall be: 1—all the Insurance coverage and limits carried by or available to the Contractor; or 2—the minimum Insurance requirements shown in this agreement, whichever is greater. Any insurance proceeds in excess of the specified minimum limits and coverage required, which are applicable to a given loss, shall be available to City.

3. Contractor shall furnish the City with original Certificates of Insurance including all required amendatory endorsements and a copy of the Declarations and Endorsement Page of the CGL policy listing all policy endorsements to City before work begins. City reserves the right to require full-certified copies of all Insurance coverage and endorsements.

I. INDEMNIFICATION:

City and its respective elected and appointed boards, officials, officers, agents, employees, and volunteers (individually and collectively, "Indemnitees") shall have no liability to CONTRACTOR or any other person for, and CONTRACTOR shall indemnify, defend, protect, and hold harmless Indemnitees from and against, any and all liabilities, claims, actions, causes of action, proceedings, suits, damages, judgments, liens, levies, costs, and expenses of whatever nature, including reasonable attorney's fees and disbursements (collectively, "Claims"), which Indemnitees may suffer or incur or to which Indemnitees may become subject by reason of or arising out of any injury to or death of any person(s), damage to property, loss of use of property, economic loss, or otherwise occurring as a result of or allegedly caused by the CONTRACTOR'S performance of or failure to perform any services under this Agreement, or by the negligent or willful acts or omissions of CONTRACTOR, its agents, officers, directors, or employees, committed in performing any of the services under this Agreement.

If any action or proceeding is brought against Indemnitees by reason of any of the matters against which CONTRACTOR has agreed to indemnify Indemnitees as provided above, CONTRACTOR, upon notice from City, shall defend Indemnitees at its expense by counsel acceptable to City, such acceptance not to be

unreasonably withheld. Indemnitees need not have first paid for any of the matters to which Indemnitees are entitled to indemnification in order to be so indemnified. The limits of the insurance required to be maintained by CONTRACTOR in this Agreement shall not limit the liability of CONTRACTOR hereunder. The provisions of this section shall survive the expiration or earlier termination of this agreement.

The provisions of this section do not apply to Claims occurring as a result of the City's active negligence or acts of omission.

II. INSURANCE

CONTRACTOR shall maintain and submit certificates of all applicable insurance including, but not limited to, the following and as otherwise required by law. The terms of the insurance policy or policies issued to provide the above insurance coverage shall provide that said insurance may not be amended or canceled by the carrier, for non-payment of premiums or otherwise, without thirty (30) days prior written notice of amendment or cancellation to the CITY. In the event the said insurance is canceled, the CONTRACTOR shall, prior to the cancellation date, submit to the City Clerk new evidence of insurance in the amounts established.

Liability Insurance

During the entire term of this Agreement, the CONTRACTOR agrees to procure and maintain General Liability insurance at its sole expense to protect against loss from liability imposed by law for damages on account of bodily injury, including death therefrom, suffered or alleged to be suffered by any person or persons whomsoever, resulting directly or indirectly from any act or activities, errors or omissions, of the CITY, or CONTRACTOR or any person acting for the CITY, or under its control or direction, and also to protect against loss from liability imposed by law for damages to any property of any person caused directly or indirectly by or from acts or activities of the CITY, or CONTRACTOR or any person acting for the CITY, or under its control or direction. Such public liability and property damage insurance shall also provide for and protect the CITY against incurring any legal cost in defending claims for alleged loss. Such General, Public and Professional liability and property damage insurance shall be maintained in full force and effect throughout the term of the Agreement and any extension thereof in the amount indicated above or the following minimum limits:

Commercial General Liability Insurance, including coverage for Premises and Operations, Contractual Liability, Personal Injury Liability, Products/Completed Operations Liability, and Independent Contractors' Liability (if applicable), in an amount of not less than two million dollars ($2,000,000.00) per occurrence, four million dollars ($4,000,000.00) annual aggregate, written on an occurrence form.

Products/Completed Operations coverage shall extend a minimum of three (3) years after project completion. Coverage shall be included on behalf of the CONTRACTOR for covered claims arising out of the actions of independent contractors. If the CONTRACTOR is using subcontractors, the policy must include work performed "by or on behalf" of the CONTRACTOR. Policy shall contain no language that would invalidate or remove the CONTRACTOR'S duty to defend or indemnify for claims or suits expressly excluded from coverage. Policy shall specifically provide for a duty to defend on the part of the CONTRACTOR.

Worker's Compensation Insurance

The CONTRACTOR shall procure and maintain, at its sole expense, Worker's Compensation Insurance in the amount of $1,000,000 per occurrence or in such amount as will fully comply with the laws of the State of California and which shall indemnify, insure and provide legal defense for both the CONTRACTOR and the CITY against any loss, claim or damage arising from any injuries or occupational diseases happening to any worker employed by the CONTRACTOR in the course of carrying out the work within the Agreement. Such insurance shall also contain a waiver of subrogation naming the City of Santa Clarita.

Automotive Insurance

The CONTRACTOR shall procure and maintain, at its sole expense, throughout the term of this Agreement, and any extension thereof, public liability and property damage insurance coverage for automotive equipment with coverage limits of not less than $1,000,000 combined single limit for each accident. All such insurance shall be primary insurance and shall name the City of Santa Clarita as an additional insured.

Waiver of Subrogation

All insurance coverage maintained or procured pursuant to this Agreement shall be endorsed to waive subrogation against the CITY, its elected or appointed officers, agents, officials, employees and volunteers or shall specifically allow CONTRACTOR or others providing insurance evidence in compliance with these specifications to waive their right of recovery prior to a loss. CONTRACTOR hereby waives its own right of recovery against the CITY, and shall require similar written express waivers and insurance clauses from each of its subconsultants.

Separation of Insureds

A severability of interests provision must apply for all additional insureds ensuring that CONTRACTOR'S insurance shall apply separately to each insured against whom claim is made or suit is brought, except with respect to the insurer's limits of liability. The policy(ies) shall not contain any cross-liability exclusions.

Pass Through Clause

CONTRACTOR agrees to ensure that its subconsultants, subcontractors, and any other party involved with the project who is brought onto or involved in the project by CONTRACTOR, provide the same minimum insurance coverage and endorsements required of CONTRACTOR. CONTRACTOR agrees to monitor and review all such coverage and assumes all responsibility for ensuring that such coverage is provided in conformity with the requirements of this section. CONTRACTOR agrees that upon request, all Agreements with consultants, subcontractors, and others engaged in the project will be submitted to the CITY for review.

Self-Insured Retentions

Any self-insured retentions must be declared to and approved by the CITY. The CITY reserves the right to require that self-insured retentions be eliminated, lowered, or replaced by a deductible. Self-insurance will not be considered to comply with these specifications unless approved by the CITY.

Primary and Additional Insured

All of such insurance shall be primary and shall name the City of Santa Clarita as additional insured. A Certificate of Insurance and an additional insured endorsement (for general and automobile liability), evidencing the above insurance coverage with a company acceptable to the City's Purchasing Agent shall be submitted to the CITY prior to execution of this Agreement on behalf of the CITY.

Requirements

Should CONTRACTOR, for any reason, fail to obtain and maintain the insurance required by this Agreement, CITY may obtain coverage at CONTRACTOR'S expense and deduct the cost of such insurance from payments due to CONTRACTOR under this Agreement or terminate. In the alternative, should CONTRACTOR fail to meet any of the insurance requirements under this Agreement, CITY may cancel the Agreement immediately with no penalty.

Should CONTRACTOR'S insurance required by this Agreement be canceled at any point prior to expiration of the policy, CONTRACTOR must notify CITY within 24 hours of receipt of notice of cancelation. Furthermore, CONTRACTOR must obtain replacement coverage that meets all contractual requirements within 10 days of the prior insurer's issuance of notice of cancelation. CONTRACTOR must ensure that there is no lapse in coverage.

If the operation under this Agreement results in an increased or decreased risk in the opinion of the City's Purchasing Agent, then the CONTRACTOR agrees that the minimum limits herein above designated shall be changed accordingly upon request by the City's Purchasing Agent.

The CONTRACTOR agrees that provisions of this paragraph as to maintenance of insurance shall not be construed as limiting in any way the extent to which the CONTRACTOR may be held responsible for the payment of damages to persons or property resulting from the CONTRACTOR'S activities or the activities of any person or persons for which the CONTRACTOR is otherwise responsible.

I have read and understand the above requirements and agree to be bound by them for any work performed for the City.

Authorized Signature: _____ Date: _____

Printed Name: _____

BID SCHEDULE

Bid #CIP-25-26-P2021REBID2

Newhall Park Pool Pump Room Replacement REBID2

City Project No. P2021

City of Santa Clarita, California

FOR REFERENCE ONLY

MUST ENTER LINE ITEMS AND SUBMIT BID SCHEDULE ELECTRONICALLY ON BIDNET

ITEM NO.	DESCRIPTION	QTY	UNIT	UNIT PRICE	TOTAL
1	Mobilization, Site prep (identify all components for 'selective demolition' – pool equipment, concrete, mechanical, electrical, underground utilities; Pool Deck Protection measures); Required Permit(s); Required insurances	1	LS	$	$
2	Pool Plaster Protection Measures	1	LS	$	$
3	Equipment Relocation Cost (remove, store, re-install saved equipment)	1	LS	$	$
4	Demolition and hauling of existing landscaping	1	LS	$	$
5	Demolition and hauling of vertical structures (including, but not limited to: existing pump station building and footing, chain-link fences, existing canopy above chemical tanks, storage shed, and gates)	1	LS	$	$
6	Demolition and hauling of the concrete slab sections (per callout D1 and D9 on sheet D1.0 of the plan set)	1	LS	$	$
7	Demolition and hauling of electrical materials (including, but not limited to: electrical panels, wires, conduits, lights, receptacles, and junction boxes) (Sheets E1.0D & E2.0D)	1	LS	$	$
8	Demolition and hauling of mechanical materials/systems (including, but not limited to: pipes, valves, fittings, chemical tubing, backwash pit, and pipe supports)	1	LS	$	$
9	Renovate Inside of Existing Wet Well [Interior Roof, Interior Walls, Interior Floor Slab] – includes	875	SF	$	$

	repairing spalled concrete, crack repairs (Detail 12/Sheet S0.3), and the application of a waterproof coating on the interior floor and walls (Xypex or approved equal)				
10	Site grading per plan (Including landscape grading and site preparation for concrete footings and flatwork)	1	LS	$	$
11	Containment Wall (Retaining Wall and curb for grade change)	45	LF	$	$
12	Pump Station Floor Drains (per plans)	5	EA	$	$
13	Concrete Flat Work (including, but not limited to: concrete slab, housekeeping pads, walkway, concrete deck, chemical containment curbs)	1020	SF	$	$
14	Wet well regrading (Sheet C2.0 and per Detail B sheet C3.2)	280	SF	$	$
15	CMU Building (including, but not limited to: Concrete Foundation/Slab, Structural Walls, Fiberglass Doors, Roof, Roof Drains, Footing, Roll-up Door)	1,300	SF	$	$
16	Covered Canopy Structure (including, but not limited to: steel beams, steel columns, fiber-cement siding, shade structure, and cantilevered shade structure at front of pump station)	1	LS	$	$
17	Access Hatch in Roof for Vertical Turbine Pump Removal	1	EA	$	$
18	Wet Well Access Hatch	1	EA	$	$
19	10” Insulated Heater Pipe	45	LF	$	$
20	14” Insulated Heater Pipe	15	LF	$	$
21	8” Pipe	80	LF	$	$

22	6” Pipe	20	LF	$	$
23	4” Pipe	40	LF	$	$
24	3” Sewer Drain Pipe	80	LF	$	$
25	2” Water Line Connection	120	LF	$	$
26	Gas Line Connection	40	LF	$	$
27	Valves and Fittings	1	LS	$	$
28	Backwash Piping and Associated Piping (including, but not limited to: backwash standpipe, 10-inch DWV pipe, and fittings) (Sheets M2.1 and M4.1)	1	LS	$	$
29	Heater Intake and Exhaust Pipe (including, but not limited to: 10” PVC intake pipe, 14” Double-wall Type B Vent, Insulated Wall Fittings, and Vent Cap)	1	LS	$	$
30	Water Level Sensor	1	EA	$	$
31	Flow Meter and Associated Transmitter (Sheet M4.2)	1	EA	$	$
32	Storm Drain System (including, but not limited to: 4” floor drain, 4” DWV pipe and fittings, 12” HDPE storm drain, 12” perforated storm drain, gravel, and nonwoven geofabric)	1	LS	$	$
33	Pressure Gauges and Transducers (Detail F/Sheet M4.4)	1	EA	$	$
34	Air Relief Valve (Detail D/Sheet M4.1)	2	EA	$	$
35	Pipe Pressure Test – all water lines and drain lines	1	LS	$	$
36	Control / Electrical Panels – provide and install (Sheets E1.0, E3.0, E4.0, E4.1, E6.0)	1	LS	$	$

37	Electrical Component Installations (including, but not limited to: Conduits, cables, junction boxes, outlets, switches, linear lights, exit signs, outdoor wall packs, grounding system, and safety devices)	1	LS	$	$
38	550 CFM Exhaust Fan, Ducting, & Vent Piping – provide & install	2	EA	$	$
39	100 CFM Exhaust Fan, Ducting, & Vent Piping – provide & install	5	EA	$	$
40	Chemical Controller – provide and install (Sheets M1.0 and M3.0)	1	EA	$	$
41	Acid Fume Scrubber, including, but not limited to: acid fume scrubber, wall mount kit, tubing, and tank connection)	1	EA	$	$
42	Wrought Iron Fence* (Around Pump Station, including, but not limited to: fence, posts, and post footings) ***[*– does not include Pool Perimeter Fencing]***	176	LF	$	$
43	Wrought Iron Gate - Single (including, but not limited to: gate, posts, and post footings)	2	EA	$	$
44	Wrought Iron Gate - Double (including, but not limited to: gate, posts, and post footings)	2	EA	$	$
45	Pool Equipment Start-up – Testing, Function adjustments, Calibration as needed	1	LS	$	$
46	Operations & Maintenance – Manual, 30-Day Break-in Period	1	LS	$	$
				TOTAL BID:	$

The award of contract, if made, will be to the lowest responsive BIDDER determined solely by the AGENCY.

The AGENCY also reserves the right to add/delete the quantities to the existing bid items, or delete the entire bid item if they are found not required by the Agency during the course of the construction, or add new bid items or scope of work by Contract Change Order at any time during the project up to the last contract working day.

All bids, including all pricing, shall be effective/valid for a minimum period of 120 calendar days after the date of bid closing. In the event a final contract has not been awarded within this period, the City reserves the right to negotiate extensions to this period.

ALTERNATE BID SCHEDULE

Bid #CIP-25-26-P2021REBID2
City Project No. P2021
Newhall Park Pool Pump Room Replacement REBID2
City of Santa Clarita, California

Do **NOT** include this pricing in the total base bid amount. Fill out this form completely and upload it with your bid. In the event any mathematical discrepancies are found in the pricing forms submitted, the unit price shall govern. Do **NOT** enter this pricing on BidNet.

ITEM NO.	DESCRIPTION	QTY.	UNIT	UNIT PRICE	TOTAL
1	Demolition and hauling of existing pool perimeter fence enclosure (including, but not limited to: chain link fence, gates, posts, and associated footings)	1	LS	$	$
2	Wrought Iron Fence – Perimeter of Pool Complex	154	LF	$	$
3	Single Wrought Iron Gate	1	EA	$	$
4	Concrete Flat Work (including the new access road per Construction Note A17/Sheet C1.0 and associated excavation required)	1	LS	$	$
5	Double Door Egress Gate (Detail D Sheet C3.0)	2	EA	$	$
6	Eye Wash Drench Hose (including, but not limited to: eye wash drench hose, wall mount, 20 feet of 2” PVC pipe and associated fittings)	2	EA	$	$
7	Purchase new GOULDS VIT-DITM 11 CLC 15 HP, 600 GPM @ 59’ TDH vertical turbine pump, 208/120V 3-Phase power	1	LS	$	$
8	Install Vertical Turbine Pump	1	LS	$	$
ALTERNATE ITEMS GRAND TOTAL:				$	

TOTAL ALTERNATE ITEMS BID AMOUNT IN WORDS:

_____

_____

The award of contract, if made, will be to the lowest responsive BIDDER determined solely by the AGENCY.

The AGENCY also reserves the right to add/delete the quantities to the existing bid items, or delete the entire bid item if they are found not required by the Agency during the course of the construction, or

add new bid items or scope of work by Contract Change Order at any time during the project up to the last contract working day.

All bids, including all pricing, shall be effective/valid for a minimum period of 120 calendar days after the date of bid closing. In the event a final contract has not been awarded within this period, the City reserves the right to negotiate extensions to this period.

The BIDDER agrees to hold all unit prices in this Alternate Bid Schedule constant throughout the duration of the project up to the last contract working day.

BIDDER'S INFORMATION AND CERTIFICATION

Bid #CIP-25-26-P2021REBID2
Newhall Park Pool Pump Room Replacement REBID2
City Project No. P2021
City of Santa Clarita, CA

Bidder certifies that the representations of the bid are true and correct and made under penalty of perjury.

EQUAL EMPLOYMENT OPPORTUNITY COMPLIANCE

Bidder certifies that in all previous contracts or subcontracts, all reports which may have been due under the requirements of any CITY, State, or Federal equal employment opportunity orders have been satisfactorily filed, and that no such reports are currently outstanding.

AFFIRMATIVE ACTION CERTIFICATION

Bidder certifies that affirmative action has been taken to seek out and consider minority business enterprises for those portions of the work to be subcontracted, and that such affirmative actions have been fully documented, that said documentation is open to inspection, and that said affirmative action will remain in effect for the life of any contract awarded hereunder. Furthermore, Bidder certifies that affirmative action will be taken to meet all equal employment opportunity requirements of the contract documents.

CERTIFICATION REGARDING DIR CONTRACTOR/SUBCONTRACTOR REGISTRATION

By my signature hereunder, as the Contractor, I certify that Contractor, and all Subcontractors listed on the Subcontractor Designations form are the subject of current and active contractor registrations pursuant to Division 2, Part 7, Chapter 1 (commencing with section 1720) of the California Labor Code. Contractor's registration number is indicated below. Subcontractors' registration numbers are indicated on the Subcontractor Designations form.

Bidder's Name: _____

Business Address: _____

Telephone No.: _____

State CONTRACTOR's License No. & Class: _____

DIR No.: _____

Original Date: _____ Expiration Date: _____

The following are the names, titles, addresses, and phone numbers of all individuals, firm members, partners, joint ventures, and/or corporate officers having a principal interest in this proposal:

_____

_____

_____

_____

The dates of any voluntary or involuntary bankruptcy judgments against any principal having an interest in this proposal, or any firm, corporation, partnership or joint venture of which any principal having an interest in this proposal was an owner, corporate officer, partner or joint venture are as follows:

_____

_____

_____

_____

All current and prior DBAs, alias, and/or fictitious business names for any principal having an interest in this proposal are as follows:

_____

_____

_____

IN WITNESS WHEREOF, BIDDER executes and submits this proposal with the names, title, hands, and seals of all aforementioned principals this _____ day of _____ 20___.

BIDDER: _____
Signature

_____
Name and Title of Signatory

_____
Legal Name of Bidder

_____
Address

_____ _____
Telephone Number Federal Tax I.D. No.

BIDDER'S QUESTIONNAIRE

Bid #CIP-25-26-P2021REBID2
Newhall Park Pool Pump Room Replacement REBID2
City Project No. P2021
City of Santa Clarita, California

1. Submitted by: _____ Telephone: _____

Principal Office Address: _____

2. Type of Firm:

- ❑ C Corporation
- ❑ S Corporation
- ❑ Individual/Sole Proprietor or Single –Member LLC
- ❑ Partnership
- ❑ Limited Liability Company "C" C-Corp
- ❑ Limited Liability Company "S" S-Corp
- ❑ Limited Liability Company "P" Partnership
- ❑ Other _____

3a. If a corporation, answer these questions:

Date of Incorporation: _____State of Incorporation:_____

President's Name: _____

Vice-President's Name: _____

Secretary or Clerk's Name: _____

Treasurer's Name: _____

3b. If a partnership, answer these questions:

Date of organization: _____State Organized in: _____

Name of all partners holding more than a 10% interest: _____

_____ _____ _____

_____ _____ _____

_____ _____ _____

Designate which are General or Managing Partners.

BIDDER'S QUESTIONNAIRE (cont'd)

Bid #CIP-25-26-P2021REBID2
Newhall Park Pool Pump Room
Replacement REBID2
City Project No. P2021
City of Santa Clarita, California

4. Name of person holding CONTRACTOR's license: _____

License number: _____ Class: _____Expiration Date: _____

D.I.R. Registration # _____

5. CONTRACTOR's Representative: _____

Title: _____

Alternate: _____

Title: _____

6. List the major construction projects your organization has in progress as of this date:

A.

Owner: _____

Project Location: _____

Type of Project: _____

B.
Owner: _____

Project Location: _____

Type of Project: _____

C.
Owner: _____

Project Location: _____

Type of Project: _____

BIDDER PRE-QUALIFICATION QUESTIONNAIRE

Bid #CIP-25-26-P2021REBID2
Newhall Park Pool Pump Room Replacement REBID2
City Project No. P2021
City of Santa Clarita, California

In accordance with the California Public Contract Code Section 20101, the City of Santa Clarita will review this completed bidder's pre-qualification questionnaire immediately following bid closing, *starting with the apparent low bidder.* If the apparent low bidder answers in the negative OR does not meet the requirements outlined in this questionnaire, the City will find the apparent low bidder unresponsive, and will move on to the next apparent low bidder, and so and so forth.

1. In the past five years has any claim against your firm concerning your firm's work on a construction project been filed in court or arbitration?

   Yes ☐ No ☐

   If "yes," on separate signed sheets of paper identify the claim{s) by providing the project name, date of the claim, name of the claimant, a brief description of the nature of the claim, the court in which the case was filed and a brief description of the status of the claim (pending or, if resolved, a brief description of the resolution).

2. In the past five years has your firm made any claim against a project owner concerning work on a project or payment for a contract and filed that claim in court or arbitration?

   Yes ☐ No ☐

   If "yes," on separate signed sheets of paper identify the claim by providing the project name, date of the claim, name of the entity {or entities) against whom the claim was filed, a brief description of the nature of the claim, the court in which the case was filed and a brief description of the status of the claim (pending, or if resolved, a brief description of the resolution).

3. Has CAL OSHA {or Fed/OSHA) cited and assessed penalties against your firm for any "serious," "willful" or "repeat" violations of its safety or health regulations in the past five years? NOTE: If you have filed an appeal of a citation, and the Occupational Safety and Health Appeals Board has not yet ruled on your appeal, you need not include information about it.

   Yes ☐ No ☐

   If "yes," attached a separate signed page describing the citations, including information about the dates of the citations, the nature of the violation, the project on which the citation{s) was or were issued, and the amount of penalty paid, if any. If the citation was appealed to the Occupational Safety and Health Appeals Board and a decision has been issued, state the case number and the date of the decision.

4. List your firm's Experience Modification Rate {EMR) {California workers' compensation insurance) for each of the past three premium years:

NOTE: An Experience Modification Rate is issued to your firm annually by your workers' compensation insurance carrier.

Current year: _____
Previous year: _____
Year prior to previous year: _____

If your EMR for any of these three years is or was 1.00 or higher you may, if you wish, attach a letter of explanation.

5. Indicate your firm's capacity to complete this project based on any present commitments to other projects, whether that be pre-construction, post-construction, or ongoing construction. In other words, is your firm capable of performing or complying with the required delivery or performance schedules, considering all existing commercial and governmental business commitments? The construction window "constraint" is to have 'substantial completion of the Work' by February 7, 2027. Please elaborate on separate signed sheets of paper.

6. Does your firm have the adequate financial capabilities including bonding capacity (up to $3,000,000) to perform the contract in question, together with all other pending work, or have the ability to obtain adequate financial resources in a timely manner? Please elaborate on separate signed sheets of paper, and provide confirmation letter from Surety.

7. Does your firm have a valid California Class A, Class B, or C-53 Contractors License?

   Yes ☐ No ☐

8. Has your firm completed a minimum of two projects valued between $2M and $3M? Please elaborate on separate signed sheets of paper.

9. Has your firm successfully constructed a Pool Equipment Room? Please elaborate on separate signed sheets of paper.

10. Does your firm have insurance coverage of the following type and limits?
    - **$2MM** per Occurrence (General Liability or Excess)
    - $4MM annual General Aggregate (General Liability or Excess)
    - Workers' Comp (statutory limits)

CERTIFICATION OF NON-SEGREGATED FACILITIES

Bid #CIP-25-26-P2021REBID2
Newhall Park Pool Pump Room Replacement REBID2
City Project No. P2021
City of Santa Clarita, California

The BIDDER certifies that it does not maintain or provide for its employees any segregated facilities at any of its establishments, and that it does not permit its employees to perform their services at any location, under its control, where segregated facilities are maintained. The BIDDER certifies further that it will not maintain or provide for its employees any segregated facilities at any of its establishments, and that it will not permit its employees to perform their services at any location, under its control, where segregated facilities are maintained. The BIDDER agrees that a breach of this certification is a violation of the Equal Opportunity clause in this Contract. As used in this certification, the term "segregated facilities" means any waiting rooms, work areas, rest rooms, and wash rooms, restaurants and other eating areas, time clocks, locker rooms and other storage or dressing areas, parking lots, drinking fountains, recreation or entertainment areas, transportation, and housing facilities provided for employees which are segregated by explicit directive or are in fact segregated on the basis of race, creed, color, or national origin, because of habit, local custom, or otherwise. The BIDDER agrees that (except where it has obtained identical certifications from proposed subcontractors for specific time periods) it will obtain identical certifications from proposed subcontractors prior to the award of subcontracts exceeding $10,000 which are not exempt from the provisions of the Equal Opportunity clause, and that it will retain such certifications in its files.

_____

BIDDER

Required by the May 19, 1967 order on Elimination of Segregated Facilities, by the Secretary of Labor – 32 F.R. 7439, May 19, 1967 (F.R. Vol. 33, No. 33 – Friday, February 16, 1968 – p. 3065).

DESIGNATION OF SUBCONTRACTORS

Bid # CIP-25-26-P2021REBID2
Newhall Park Pool Pump Room Replacement REBID2
City Project No. P2021
City of Santa Clarita, California

Listed below are the names and locations of the places of business of each subcontractor, supplier, and vendor who will perform work or labor or render service in excess of ½ of 1 percent, or $10,000 (whichever is greater) of the prime contractor's total bid. If no Subcontractors will be used fill out the form with NA. **Add addt. sheets if needed.**

Subcontractor	DIR Registration No.*	Dollar Value of Work
Location and Place of Business		
Bid Schedule Item No's:	Description of Work	
License No.	Exp. Date: / /	Phone ( )
Subcontractor	DIR Registration No.*	Dollar Value of Work
Location and Place of Business		
Bid Schedule Item No's:	Description of Work	
License No.	Exp. Date: / /	Phone ( )
Subcontractor	DIR Registration No.*	Dollar Value of Work
Location and Place of Business		
Bid Schedule Item No's:	Description of Work	
License No.	Exp. Date: / /	Phone ( )

NOTE: A BIDDER or subcontractor shall not be qualified to bid on, be listed in a bid proposal, subject to the requirements of Section 4104 of the Public Contract Code, or engage in the performance of any contract for public work, as defined in this chapter, unless currently registered and qualified to perform public work pursuant to Section 1725.5 of the Labor Code. It is not a violation of this section for an unregistered BIDDER to submit a bid that is authorized by Section 7029.1 of the Business and Professions Code or by Section 10164 or 20103.5 of the Public Contract Code, provided the BIDDER is registered to perform public work pursuant to Section 1725.5 of the Labor Code at the time the contract is awarded. *Pursuant to Division 2, Part 7, Chapter 1 (commencing with section 1720) of the California Labor Code.

REFERENCES

Bid #CIP-25-26-P2021REBID2
Newhall Park Pool Pump Room Replacement REBID2
City Project No. P2021
City of Santa Clarita, California

The following are the names, addresses, and telephone numbers of three public agencies for which bidder has performed and completed work of a similar scope and size within the past 3 years. If the scope of work/specifications requests references different than instructions above, the scope of work/specifications shall govern:

1. _____
   Name and Address of Owner / Agency

   _____
   Name and Telephone Number of Person Familiar with Project

   _____
   Contract Amount Type of Work Date Completed

2. _____
   Name and Address of Owner / Agency

   _____
   Name and Telephone Number of Person Familiar with Project

   _____
   Contract Amount Type of Work Date Completed

3. _____
   Name and Address of Owner / Agency

   _____
   Name and Telephone Number of Person Familiar with Project

   _____
   Contract Amount Type of Work Date Completed

The following are the names, addresses, and telephone numbers of all brokers and sureties from whom bidder intends to procure insurance bonds: _____

_____

IRAN CONTRACTING ACT CERTIFICATION

(Public Contract Code Sections 2200 *et seq.*)

Bid #CIP-25-26-P2021REBID2
Newhall Park Pool Pump Room Replacement REBID2
City Project No. P2021
City of Santa Clarita, California

As required by California Public Contract Code section 2204, Proposer certifies that the option checked below relating to Proposer's status in regard to the Iran Contracting Act of 2010 (Public Contract Code sections 2200 *et seq.*) is true and correct:

☐ Proposer is not:

(i) identified on the current list of persons and entities engaging in investment activities in Iran prepared by the California Department of General Services in accordance with subdivision (b) of Public Contract Code section 2203; or

(ii) a financial institution that extends, for 45 days or more, credit in the amount of $20,000,000 or more to any other person or entity identified on the current list of persons and entities engaging in investment activities in Iran prepared by the California Department of General Services in accordance with subdivision (b) of Public Contract Code section 2203, if that person or entity uses or will use the credit to provide goods or services in the energy sector in Iran.

☐ Los Angeles County has exempted Proposer from the requirements of the Iran Contracting Act of 2010 after making a public finding that, absent the exemption, Los Angeles County will be unable to obtain the goods and/or services to be provided pursuant to the Contract.

☐ The amount of the Contract payable to Proposer for the Project is less than $1,000,000.

CERTIFICATION

I, the official named below, CERTIFY UNDER PENALTY OF PERJURY, that I am duly authorized to legally bind the Proposer to the above selected option. This certification is made under the laws of the State of California.

Contractor

Firm	Signed
Date	Name/Title

Note: In accordance with Public Contract Code section 2205, false certification of this form shall be reported to the California Attorney General and may result in civil penalties equal to the greater of $250,000 or twice the Contract amount, termination of the Contract and/or ineligibility to bid on contracts for three years.

END OF DOCUMENT

BIDDER'S BOND

Bid #CIP-25-26-P2021REBID2
Newhall Park Pool Pump Room Replacement REBID2
City Project No. P2021
City of Santa Clarita, California

Proposals must be accompanied by a proposal guarantee consisting of a certified check, cashier's check or BIDDER's bid bond payable to the CITY or cash deposit in the amount not less than ten (10) percent of the total amount bid. Certified check, cashier's check or Bidder's bid bond must be received at City Hall, 23920 Valencia Blvd., Santa Clarita, CA 91355, Attn: Purchasing, Suite 120, and marked with the words "BID BOND FOR" and the bid #, no later than the bid closing date and time, for the BIDDER to be considered responsive.

NOTE: The following form shall be used in case check accompanies bid.

Accompanying this Proposal is a *certified/cashier's check payable to the order of the City of Santa Clarita for: _____ dollars ($_____), this amount being not less than ten percent (10%) of the total amount of the bid. The proceeds of this check shall become the property of said CITY provided this Proposal shall be accepted by said CITY through action of its legally constituted contracting authorities, and the undersigned shall fail to execute a contract and furnish the required bonds within the stipulated time; otherwise, the check shall be returned to the undersigned.

Project Name: Newhall Park Pool Pump Room Replacement REBID2

Bid No. CIP-25-26-P2021REBID2

Project No. P2021

_____
Bidder's Signature

_____
CONTRACTOR/BIDDER

_____
Address

_____
City, State, Zip Code

* Delete the inapplicable work.

NOTE: If the bidder desires to use a bond instead of a check, the following form shall be executed. The sum of this bond shall be not less than ten percent (10%) of the total amount of the bid.

PROPOSAL GUARANTEE BID BOND

Bid #CIP-25-26-P2021REBID2
Newhall Park Pool Pump Room Replacement REBID2
City Project No. P2021
City of Santa Clarita, California

KNOW ALL PERSONS BY THESE PRESENTS that _____, as BIDDER, and _____as SURETY, are held and firmly bound unto the

City of Santa Clarita, as CITY, in the penal sum of_____ dollars ($_____), which is ten percent (10%) of the total amount bid by BIDDER to CITY for the above-stated project, for the payment of which sum, BIDDER and SURETY agree to be bound, jointly and severally, firmly by these presents.

THE CONDITIONS OF THIS OBLIGATION ARE SUCH that, whereas BIDDER is about to submit a bid to CITY for the above-stated project, if said bid is rejected, or if said bid is accepted and the contract is awarded and entered into by BIDDER in the manner and time specified, then this obligation shall be null and void, otherwise it shall remain in full force and effect in favor of CITY.

IN WITNESS WHEREAS, the parties hereto have set their names, titles, hands, and seals, this

_____ Day of _____, 20___.

CONTRACTOR: _____
Name and Title of Signatory Signature

_____
Legal Name of Bidder

_____
Bidder Address

_____ _____
Telephone Number Federal Tax I.D. No.

SURETY*: _____
Name

_____
Phone Number and Email

_____
Address

*Provide BIDDER and SURETY name, phone number, email, and the name, title, address, and phone number for authorized representative. **IMPORTANT** - Surety Companies executing Bonds must appear on the Treasury Department's most current list (Circular 570, as amended) and be authorized to transact business in the State where the project is located.

Surety signatures must be notarized prior to submittal.

<u>NON-COLLUSION AFFIDAVIT</u>

(Title 23 United States Code Section 112 and Public Contract Code Section 7106)

Bid #CIP-25-26-P2021REBID2
Newhall Park Pool Pump Room Replacement REBID2
City Project No. P2021
City of Santa Clarita, California

To the CITY OF SANTA CLARITA:

In conformance with Title 23 United States Code Section 112 and Public Contract Code 7106, the Bidder declares that the bid is not made in the interest of, or on behalf of, any undisclosed person, partnership, company, association, organization, or corporation; that the bid is genuine and not collusive or sham; that the Bidder has not directly or indirectly induced or solicited any other bidder to put in a false or sham bid, and has not directly or indirectly colluded, conspired, connived, or agreed with any bidder or anyone else to put in a sham bid, or that anyone shall refrain from bidding; that the Bidder has not in any manner, directly or indirectly, sought by agreement, communication, or conference with anyone to fix the bid price of the Bidder or any other bidder, or to fix any overhead, profit, or cost element of the bid price, or of that of any other bidder, or to secure any advantage against the public body awarding the contract of anyone interested in the proposed contract; that all statements contained in the bid are true; and, further, that the Bidder has not, directly or indirectly, submitted his or her bid price or any breakdown thereof, or the contents thereof, or divulged information or data relative thereto, or paid, and will not pay, any fee to any corporation, partnership, company association, organization, bid depository, or to any member or agent thereof to effectuate a collusive or sham bid.

THE BIDDER'S EXECUTION ON THE SIGNATURE PORTION OF THE "BIDDER'S CERTIFICATION" SHALL ALSO CONSTITUTE AN ENDORSEMENT AND EXECUTION OF THOSE CERTIFICATIONS WHICH FORM A PART OF THE PROPOSAL. BIDDERS ARE CAUTIONED THAT MAKING A FALSE CERTIFICATION MAY SUBJECT THE CERTIFIER TO CRIMINAL PROSECUTION.

NON-COLLUSION AFFIDAVIT

Bid #CIP-25-26-P2021REBID2
Newhall Park Pool Pump Room Replacement REBID2
City Project No. P2021
City of Santa Clarita, California

TO BE EXECUTED BY EACH BIDDER OF A PRINCIPAL CONTRACT

STATE OF CALIFORNIA)
) §
COUNTY OF LOS ANGELES)

_____ being first duly sworn deposes and says that he/she is the _____ (sole owner, a partner, president, etc.) of _____ the party making the foregoing bid; that such bid is not made in the interest of or behalf of any undisclosed person, partnership, company, association, organization or corporation, that such bid is genuine and not collusive or sham, that said BIDDER has not directly or indirectly induced or solicited any other BIDDER to put in a false or sham bid, or that anyone shall refrain from bidding, that said BIDDER has not in any manner, directly or indirectly sought by agreements, communication or conference with anyone to fix the bid price of said BIDDER or of any other BIDDER, or to fix the overhead, profit, or cost element of such bid price, or of that of any other BIDDER, or to secure any advantage against the public body awarding the Contract or anyone interested in the proposed Contract; that all statements contained in such bid are true, and further, that said BIDDER has not, directly or indirectly, submitted its bid price, or any breakdown thereof, or the contents thereof, or divulged information or date relative thereto, or paid and will not pay any fee in connection, therewith to any corporation, partnership, company, association, organization, bid depository, or to any member or CITY thereof, or to any other individual information or date relative thereto, or paid and will not pay any fee in connection, therewith to any corporation, partnership, company association, organization, bid depository, or to any member or CITY thereof, or to any other individual, except to such person or persons as have a partnership or other financial interest with said BIDDER in his general business.

Bidder: _____
Signature

Title _____

SECTION D

Subcontractor Information

SUBCONTRACTORS

Bid #CIP-25-26-P2021REBID2
Newhall Park Pool Pump Room Replacement REBID2
City Project No. P2021
City of Santa Clarita, California

1. **SUBCONTRACTORS**. The BIDDER performs not less than fifty (50%) percent of the original contract work with the bidder's own organization.

2. **LIST OF SUBCONTRACTORS**. No more than fifty (50%) percent of the work, as defined by the contract price, may be done by subcontractors. Copies of subcontracts will be provided to the City Engineer upon his request.

   2.1. Each BIDDER must submit with his bid the following:
   - 2.1.1. The Full name of each subcontracting firm as required by Government Code, Sec. 4201, typed or legibly printed.
   - 2.1.2. The address of each firm.
   - 2.1.3. The telephone number at the place of business.
   - 2.1.4. Work to be performed by each subcontracting firm.
   - 2.1.5. Total approximate dollar amount of each subcontract.

   2.2. Submit the "Designation of Subcontractors" form enclosed herewith. No Contract shall be considered unless such list is submitted as required.

3. **PROMPT PROGRESS PAYMENT TO SUBCONTRACTORS**. A prime contractor or subcontractor shall pay to any subcontractor, not later than 30 days after receipt of each progress payment, unless otherwise agreed to in writing, the respective amounts allowed the contractor on account of the work performed by the subcontractors, to the extent of each subcontractor's interest therein in accordance with the provision in Section 7108.5 of the California Business and Professions Code concerning prompt payment to subcontractors. In the event that there is a good faith dispute over all or any portion of the amount due on a progress payment from the prime contractor or subcontractor to a subcontractor, the prime contractor or subcontractor may withhold no more than 150 percent of the disputed amount. Any violation of this section shall constitute a cause for disciplinary action and shall subject the licensee to a penalty, payable to the subcontractor, of 2 percent of the amount due per month for every month that payment is not made. In any action for the collection of funds wrongfully withheld, the prevailing party shall be entitled to his or her attorney's fees and costs. The sanctions authorized under this section shall be separate from, and in addition to, all other remedies, either civil, administrative, or criminal.

4. **CALIFORNIA DEBARRED CONTRACTORS AND SUBCONTRACTORS**. Sections 1720 et seq. of the Labor Code and Section 6109 of the Public Contract Code apply to the Contract, and each potential bidder and Subcontractor is responsible to be in full compliance with those laws. lf a potential bidder or subcontractor has been found by the California Labor Commissioner to be in violation of Section 1720 et seq. of the Labor Code, in accordance with Section 1777.1of the Labor Code, the potential bidder shall be ineligible to bid or be awarded a contract or to perform work on any City public works project. ln accordance with Section 6109 of the Public Contract Code any subcontractor who is ineligible to

perform work on a public works project pursuant to Section 1777.1 or 1777.7 of the Labor Code is prohibited from performing work on any City public works project. Pursuant to Section 6109(b) of the Public Contract Code, any contract on a City public works project entered into between a bidder and a debarred subcontractor is void as a matter of law. A debarred subcontractor may not receive any City money for performing work as a subcontractor on a City public works contract, and any City money that may have been paid to a debarred subcontractor by a bidder on the project shall be returned to the City. The bidder shall be responsible for the payment of wages to workers of a debarred subcontractor who has been allowed to work on the City project.

5. PERFORMANCE OF SUBCONTRACTORS.

5.1. The subcontractors listed by the Contractor in conformance with Section 3-3, "Subcontracts" of the (SSPWC), shall perform the work and supply the materials for which they are listed, unless the Contractor has received prior written authorization to perform the work with other forces or to obtain the materials from other sources.

5.2. The subcontractors listed by you in the Contract Documents shall list therein the name and address of each subcontractor to whom the bidder proposes to subcontract portions of the work in an amount in excess of one-half of one percent of the total bid or $10,000, whichever is greater, in accordance with the Subletting and Subcontracting Fair Practices Act, commencing with Section 4100 of the Public Contract Code. The bidder's attention is invited to other provisions of the Act related to the imposition of penalties for a failure to observe its provisions by using unauthorized subcontractors or by making unauthorized substitutions.

SECTION E

Awardee Sample Forms

SAMPLE AGREEMENT

CON-9
Council Approval Date: _____
Agenda Item: _____
Contract Amount: _____

CAPITAL IMPROVEMENT PROJECT AGREEMENT (STATE)
BETWEEN
THE CITY OF SANTA CLARITA
AND
<CONTRACTOR NAME>
FOR
<FULL PROJECT NAME>
<PHASE NUMBER AND PHASE DESCRIPTION (AS APPLICABLE)>
<CITY BID NO. (AS APPLICABLE) OR CITY PROJECT NO. (ONLY IF BID No. is N/A)>
<FEDERAL PROJECT/ID NUMBER (AS APPLICABLE)>
<BRIEF DESCRIPTION OF SERVICES>

This AGREEMENT is made and entered into for the above-stated project BY AND BETWEEN the CITY OF SANTA CLARITA, as CITY, and
as CONTRACTOR.

CITY and CONTRACTOR have mutually agreed as follows:

ARTICLE I

That contract documents for the aforesaid project shall consist of the Notice Inviting Bids, Instructions to Bidders, Proposal, General Specifications, Standard Specifications, Special Provisions, Plans, and all referenced specifications, details, standard drawings, special drawings, and appendices; together with this AGREEMENT and all required bonds, insurance certificates, permits, notices, and affidavits; and also including any and all addenda or supplemental agreements clarifying or extending the work contemplated as may be required to insure its completion in an acceptable manner. All of the provisions of said AGREEMENT documents are made a part hereof as though fully set forth herein.

ARTICLE II

For and in consideration of the payments and agreements to be made and performed by CITY, CONTRACTOR agrees to furnish all materials and perform all work required for the above-stated project, and to fulfill all other obligations as set forth in the aforesaid contract documents.

ARTICLE III

CONTRACTOR agrees to receive and accept the prices set forth in the Proposal as full compensation for furnishing all materials, performing all work, and fulfilling all obligations

hereunder. Said compensation shall cover all expenses, losses, damages, and consequences arising out of the nature of the work during its progress or prior to its acceptance including those for well and faithfully completing the work and the whole thereof in the manner and time specified in the aforesaid contract documents; and also including those arising from actions of the elements, unforeseen difficulties or obstructions encountered in the prosecution of the work, suspension or discontinuance of the work, and all other unknowns or risks of any description connected with the work.

Except for defaults of subcontractors at any tier, CONTRACTOR shall not be liable for any excess costs if the failure to perform the Agreement arises from causes beyond the control and without the fault or negligence of CONTRACTOR, including without limitation failure to reasonably mitigate any adverse impacts (Force Majeure). Force Majeure events include the following: Acts of God, fires, floods, earthquake, other natural disasters, epidemics and pandemics (other than COVID-19 or variants), abnormal weather conditions beyond the parameters otherwise set forth in this Article, nuclear accidents, strikes, lockouts, freight embargos, interruptions in service by a regulated utility, or governmental statutes or regulations enacted or imposed after the fact (together, "force majeure events").

ARTICLE IV

CITY hereby promises and agrees to employ, and does hereby employ, CONTRACTOR to provide the materials, do the work, and fulfill the obligations according to the terms and conditions herein contained and referred to, for the prices aforesaid, and hereby contracts to pay the same at the time, in the manner, and upon the conditions set forth in the contract documents.

ARTICLE V

City and its respective elected and appointed boards, officials, officers, agents, employees, and volunteers (individually and collectively, "Indemnitees") shall have no liability to CONTRACTOR or any other person for, and CONTRACTOR shall indemnify, defend, protect, and hold harmless Indemnitees from and against, any and all liabilities, claims, actions, causes of action, proceedings, suits, damages, judgments, liens, levies, costs, and expenses of whatever nature, including reasonable attorney's fees and disbursements (collectively, "Claims"), which Indemnitees may suffer or incur or to which Indemnitees may become subject by reason of or arising out of any injury to or death of any person(s), damage to property, loss of use of property, economic loss, or otherwise occurring as a result of or allegedly caused by the CONTRACTOR'S performance of or failure to perform any services under this Agreement, or by the negligent or willful acts or omissions of CONTRACTOR, its agents, officers, directors, or employees, committed in performing any of the services under this Agreement.

If any action or proceeding is brought against Indemnitees by reason of any of the matters against which CONTRACTOR has agreed to indemnify Indemnitees as provided above, CONTRACTOR, upon notice from City, shall defend Indemnitees at its expense by counsel acceptable to City, such acceptance not to be unreasonably withheld. Indemnitees need not have first paid for any of the matters to which Indemnitees are entitled to indemnification in order to be so indemnified. The limits of the insurance required to be maintained by CONTRACTOR in this Agreement shall not limit the liability of CONTRACTOR hereunder. The provisions of this section shall survive the

expiration or earlier termination of this agreement.

The provisions of this section do not apply to Claims occurring as a result of the City's active negligence or acts of omission.

ARTICLE VI

The provisions of this section are provided in compliance with Public Contract Code Section 9204; they provide the procedures for any claims related to the Work performed under this Agreement.

1. Claim Definition. “Claim" means a separate demand by CONTRACTOR sent by registered mail or certified mail with return receipt requested, for one or more of the following:

    a. A time extension, including, without limitation, for relief from damages or penalties for delay assessed by CITY.

    b. Payment by CITY of money or damages arising from the Services performed by, or on behalf of, CONTRACTOR pursuant to the Agreement and payment for which is not otherwise expressly provided or to which CONTRACTOR is not otherwise entitled.

    c. Payment of an amount that is disputed by CITY.

2. Claim Process.

    a. Timing. Any Claim must be submitted to CITY in compliance with the requirements of this section no later than fourteen (14) days following the event or occurrence giving rise to the Claim. This time requirement is mandatory; failure to submit a Claim within fourteen (14) days will result in its being deemed waived.

    b. Submission. The Claim must be submitted to CITY in writing, clearly identified as a “Claim” submitted pursuant to this Article VI and must include reasonable documentation substantiating the Claim. The Claim must clearly identify and describe the dispute, including relevant references to applicable portions of the Agreement, and a chronology of relevant events. Any Claim for additional payment must include a complete, itemized breakdown of all labor, materials, taxes, insurance, and subcontract, or other costs. Substantiating documentation such as payroll records, receipts, invoices, or the like, must be submitted in support of each claimed cost. Any Claim for an extension of time or delay costs must be substantiated with schedule analysis and narrative depicting and explaining claimed time impacts.

    c. Review. Upon receipt of a Claim in compliance with this Article VI, CITY shall conduct a reasonable review of the Claim and, within a period not to exceed 45 days from receipt, shall provide CONTRACTOR a written statement identifying what portion of the Claim is disputed and what portion is undisputed. Upon receipt of a Claim, CITY and CONTRACTOR may, by mutual agreement, extend the time

period provided in this paragraph 2.

d. If CITY Approval Required. If CITY needs approval from its governing body to provide CONTRACTOR a written statement identifying the disputed portion and the undisputed portion of the Claim, and CITY'S governing body does not meet within the 45 days or within the mutually agreed to extension of time following receipt of a Claim sent by registered mail or certified mail, return receipt requested, CITY shall have up to three days following the next duly publicly noticed meeting of CITY after the 45-day period, or extension, expires to provide CONTRACTOR a written statement identifying the disputed portion and the undisputed portion.

e. Payment. Any payment due on an undisputed portion of the Claim shall be processed and made within 60 days after CITY issues its written statement. If CITY fails to issue a written statement, paragraph 3, below, shall apply.

3. Disputed Claims

a. Meet and Confer. If CONTRACTOR disputes CITY'S written response, or if CITY fails to respond to a Claim submitted pursuant to this Article within the time prescribed, CONTRACTOR may demand in writing an informal conference to meet and confer for settlement of the issues in dispute. Upon receipt of a demand in writing sent by registered mail or certified mail, return receipt requested, CITY shall schedule a meet and confer conference within 30 days for settlement of the dispute. Within 10 business days following the conclusion of the meet and confer conference, if the Claim or any portion of the Claim remains in dispute, CITY shall provide CONTRACTOR a written statement identifying the portion of the Claim that remains in dispute and the portion that is undisputed. Any payment due on an undisputed portion of the Claim shall be processed and made within 60 days after CITY issues its written statement.

b. Mediation. Any remaining disputed portion of the Claim, as identified by CONTRACTOR in writing, shall be submitted to nonbinding mediation, with CITY and CONTRACTOR sharing the associated costs equally. CITY and CONTRACTOR shall mutually agree to a mediator within 10 business days after the disputed portion of the Claim has been identified in writing by CONTRACTOR. If the parties cannot agree upon a mediator, each party shall select a mediator and those mediators shall select a qualified neutral third party to mediate the disputed portion of the Claim. Each party shall bear the fees and costs charged by its respective mediator in connection with the selection of the neutral mediator. If mediation is unsuccessful, the parts of the Claim remaining in dispute shall be subject to any other remedies authorized by the Agreement and laws.

i. For purposes of this paragraph 3.B, mediation includes any nonbinding process, including, but not limited to, neutral evaluation or a dispute review board, in which an independent third party or board assists the parties in dispute resolution through negotiation or by issuance of an evaluation. Any

mediation utilized shall conform to the timeframes in this section.

ii. Unless otherwise agreed to by CITY and CONTRACTOR in writing, the mediation conducted pursuant to this section shall excuse any further obligation, if any, under Public Contract Code Section 20104.4 to mediate after litigation has been commenced.

4. CITY'S Failure to Respond. Failure by CITY to respond to a Claim from CONTRACTOR within the time periods described in this Article or to otherwise meet the time requirements of this Article shall result in the Claim being deemed rejected in its entirety. A Claim that is denied by reason of CITY'S failure to have responded to a Claim, or its failure to otherwise meet the time requirements of this Article, shall not constitute an adverse finding with regard to the merits of the Claim or the responsibility or qualifications of CONTRACTOR.

5. Interest. Amounts not paid in a timely manner as required by this section shall bear interest at seven (7) percent per annum.

6. Approved Subcontractor Claims. If an approved subcontractor or a lower tier subcontractor lacks legal standing to assert a Claim against CITY because privity of contract does not exist, CONTRACTOR may present to CITY a Claim on behalf of a subcontractor or lower tier subcontractor. A subcontractor may request in writing, either on his or her own behalf or on behalf of a lower tier subcontractor, that CONTRACTOR present a Claim for work which was performed by the subcontractor or by a lower tier subcontractor on behalf of the subcontractor. The subcontractor requesting that the Claim be presented to CITY shall furnish reasonable documentation to support the Claim. Within 45 days of receipt of this written request, CONTRACTOR shall notify the subcontractor in writing as to whether CONTRACTOR presented the claim to CITY and, if CONTRACTOR did not present the claim, provide the subcontractor with a statement of the reasons for not having done so.

Waiver of Provisions. A waiver of the rights granted by Public Contract Code Section 9204 is void and contrary to public policy, provided, however, that (1) upon receipt of a Claim, the parties may mutually agree to waive, in writing, mediation and proceed directly to the commencement of a civil action or binding arbitration, as applicable; and (2) CITY may prescribe reasonable change order, claim, and dispute resolution procedures and requirements in addition to the provisions of Public Contract Code Section 9204, so long as the contractual provisions do not conflict with or otherwise impair the timeframes and procedures set forth in this Article.

ARTICLE VII

CONTRACTOR affirms that the signatures set forth hereinafter in execution of this AGREEMENT represent all individuals, firm members, partners, joint venturers, or corporate officers having principal interest herein.

ARTICLE VIII

Nature of Relationship

CONTRACTOR shall not be subject to day-to-day supervision and control by CITY employees or officials. CONTRACTOR shall perform services in accordance with the rules, regulations and policies of CITY respecting such services, and in accordance with appropriate standards of professional conduct, if any, applicable to the services provided. CITY shall not be responsible for withholding any payroll or other taxes on behalf of CONTRACTOR. It is understood and agreed that the CONTRACTOR is, and at all times shall be, an independent CONTRACTOR and nothing contained herein shall be construed as making the CONTRACTOR, or any individual whose compensation for services is paid by the CONTRACTOR, an agent or employee of the CITY, or authorizing the CONTRACTOR to create or assume any obligation of liability for or on behalf of the CITY.

ARTICLE IX

CONTRACTOR shall maintain and submit certificates of all applicable insurance including, but not limited to, the following and as otherwise required by law. The terms of the insurance policy or policies issued to provide the above insurance coverage shall provide that said insurance may not be amended or canceled by the carrier, for non-payment of premiums or otherwise, without thirty (30) days prior written notice of amendment or cancellation to the CITY. In the event the said insurance is canceled, the CONTRACTOR shall, prior to the cancellation date, submit to the City Clerk new evidence of insurance in the amounts established.

Liability Insurance

During the entire term of this agreement, the CONTRACTOR agrees to procure and maintain General Liability insurance at its sole expense to protect against loss from liability imposed by law for damages on account of bodily injury, including death therefrom, suffered or alleged to be suffered by any person or persons whomsoever, resulting directly or indirectly from any act or activities, errors or omissions, of the CITY, or CONTRACTOR or any person acting for the CITY, or under its control or direction, and also to protect against loss from liability imposed by law for damages to any property of any person caused directly or indirectly by or from acts or activities of the CITY, or CONTRACTOR or any person acting for the CITY, or under its control or direction. Such public liability and property damage insurance shall also provide for and protect the CITY against incurring any legal cost in defending claims for alleged loss.

Such General, Public and Professional liability, and property damage insurance shall be maintained in full force and effect throughout the term of the AGREEMENT and any extension thereof in the amount indicated above or the following minimum limits:

Commercial General Liability Insurance, including coverage for Premises and Operations, Contractual Liability, Personal Injury Liability, Products/Completed Operations Liability, and Independent Contractors' Liability (if applicable), in an amount of not less than $2,000,000.00 per occurrence, $4,000,000.00 annual aggregate, written on an occurrence form.

Products/Completed Operations coverage shall extend a minimum of three (3) years after project completion. Coverage shall be included on behalf of the CONTRACTOR for covered claims arising

out of the actions of independent contractors. If the CONTRACTOR is using subcontractors, the policy must include work performed "by or on behalf" of the CONTRACTOR. Policy shall contain no language that would invalidate or remove the CONTRACTOR'S duty to defend or indemnify for claims or suits expressly excluded from coverage. Policy shall specifically provide for a duty to defend on the part of the CONTRACTOR.

Worker's Compensation Insurance

The CONTRACTOR shall procure and maintain, at its sole expense, Worker's Compensation Insurance in the amount of $1,000,000 per occurrence or in such amount as will fully comply with the laws of the State of California and which shall indemnify, insure and provide legal defense for both the CONTRACTOR and the CITY against any loss, claim or damage arising from any injuries or occupational diseases happening to any worker employed by the CONTRACTOR in the course of carrying out the work within the AGREEMENT. Such insurance shall also contain a waiver of subrogation naming the City of Santa Clarita, its officers, directors, officials, agents, and employees.

Automotive Insurance

The CONTRACTOR shall procure and maintain, at its sole expense, throughout the term of this AGREEMENT, and any extension thereof, public liability and property damage insurance coverage for automotive equipment with coverage limits of not less than $1,000,000 combined single limit. All such insurance shall be primary insurance and shall name the City of Santa Clarita as an additional insured.

Builder's Risk

Upon commencement of construction and with approval of CITY, CONTRACTOR shall obtain and maintain Builder's Risk Insurance for the entire duration of the Project until only the CITY has an insurable interest. The Builder's Risk coverage shall include the coverages as specified below: The named insureds shall be CONTRACTOR and CITY, including its officers, officials, employees, and agents. All subcontractors (excluding those solely responsible for design work) of any tier and suppliers shall be included as additional insureds as their interests may appear. CONTRACTOR shall not be required to maintain property insurance for any portion of the Project following transfer of control thereof to CITY. The policy shall contain a provision that all proceeds from the Builder's Risk Policy shall be made payable to the CITY. The CITY will act as a fiduciary for all other interests in the Project.

Policy shall be provided for replacement value on an "all risk" basis for the completed value of the project. There shall be no coinsurance penalty or provisional limit provision in any such policy. Policy must include: (1) coverage for any ensuing loss from faulty workmanship, nonconforming work, omission or deficiency in design or specifications; (2) coverage against machinery accidents and operational testing; (3) coverage for removal of debris, and insuring the buildings, structures, machinery, equipment, materials, facilities, fixtures and all other properties constituting a part of the Project; (4) Ordinance or law coverage for contingent rebuilding, demolition, and increased costs of construction; (5) transit coverage (unless insured by the supplier or receiving contractor), with sub-limits sufficient to insure the full replacement value of any key equipment item; (6) ocean marine

cargo coverage insuring any Project materials or supplies, if applicable; (7) coverage with sub-limits sufficient to insure the full replacement value of any property or equipment stored either on or off the site or any staging area. Such insurance shall be on a form acceptable to CITY to ensure adequacy of terms and sub-limits and shall be submitted to the CITY prior to commencement of construction.

Fire and Extended Coverage Insurance (Services involving real property only)

CONTRACTOR also agrees to procure and maintain, at its sole expense, during the term of this Agreement, and any extension thereof, a policy of fire, extended coverage and vandalism insurance.

Pollution Liability and/or Asbestos Pollution Liability and/or Errors & Omissions

Contractors Pollution Liability and/or Asbestos Pollution Liability and/or Errors & Omissions with limit no less than $2,000,000 per claim or occurrence and $2,000,000 aggregate per policy period of one year. Coverage must be included for bodily injury and property damage, including coverage for loss of use and/or diminution in property value, and for clean-up costs arising out of, pertaining to, or in any way related to the actual or alleged discharge, dispersal, seepage, migration, release or escape of contaminants or pollutants, arising out of or pertaining to the services provided by CONTRACTOR under this Agreement, including the transportation of hazardous materials or contaminants.

Professional Liability (if Design-Build)

Professional Liability Insurance, insuring against professional errors and omissions arising from CONTRACTOR'S work on the Project, in an amount not less than $2,000,000 combined single limit for each occurrence. If CONTRACTOR cannot provide an occurrence policy, CONTRACTOR shall provide insurance covering claims made as a result of performance of work on this Project and shall maintain such insurance in effect for not less than three years following final completion of the Project.

Waiver of Subrogation

All insurance coverage maintained or procured pursuant to this Agreement shall be endorsed to waive subrogation against the CITY, its elected or appointed officers, agents, officials, employees and volunteers or shall specifically allow CONTRACTOR or others providing insurance evidence in compliance with these specifications to waive their right of recovery prior to a loss. CONTRACTOR hereby waives its own right of recovery against the CITY, and shall require similar written express waivers and insurance clauses from each of its subconsultants.

Separation of Insureds

A severability of interests provision must apply for all additional insureds ensuring that CONTRACTOR'S insurance shall apply separately to each insured against whom claim is made or suit is brought, except with respect to the insurer's limits of liability. The policy(ies) shall not contain any cross-liability exclusions.

Pass Through Clause

CONTRACTOR agrees to ensure that its subconsultants, subcontractors, and any other party involved with the project who is brought onto or involved in the project by CONTRACTOR, provide the same minimum insurance coverage and endorsements required of CONTRACTOR. CONTRACTOR agrees to monitor and review all such coverage and assumes all responsibility for ensuring that such coverage is provided in conformity with the requirements of this section. CONTRACTOR agrees that upon request, all Agreements with consultants, subcontractors, and others engaged in the project will be submitted to the CITY for review.

Self-Insured Retentions

Any self-insured retentions must be declared to and approved by the CITY. The CITY reserves the right to require that self-insured retentions be eliminated, lowered, or replaced by a deductible. Self-insurance will not be considered to comply with these specifications unless approved by the CITY.

Primary and Additional Insured

All of such insurance shall be primary insurance and, shall name the City of Santa Clarita as additional insured. A Certificate of Insurance and an additional insured endorsement (for general and automobile liability), evidencing the above insurance coverage with a company acceptable to the City's Risk Manager shall be submitted to City prior to execution of this Agreement on behalf of the City.

Risk Course of Construction Insurance (Including damage to property owned by CITY, CONTRACTOR or third parties caused by fire)

Insurance shall be in the amount of 100 percent of the completed value of the Work to be performed under this Contract. Deductible shall not exceed $25,000.00. Each loss shall be borne by CONTRACTOR.

Requirements

Should CONTRACTOR, for any reason, fail to obtain and maintain the insurance required by this Agreement, CITY may obtain coverage at CONTRACTOR'S expense and deduct the cost of such insurance from payments due to CONTRACTOR under this Agreement or terminate. In the alternative, should CONTRACTOR fail to meet any of the insurance requirements under this Agreement, CITY may cancel the Agreement immediately with no penalty.

Should CONTRACTOR'S insurance required by this Agreement be canceled at any point prior to expiration of the policy, CONTRACTOR must notify CITY within 24 hours of receipt of notice of cancelation. Furthermore, CONTRACTOR must obtain replacement coverage that meets all contractual requirements within 10 days of the prior insurer's issuance of notice of cancelation. CONTRACTOR must ensure that there is no lapse in coverage.

If the operation under this Agreement results in an increased or decreased risk in the opinion of the City's Risk Manager, then the CONTRACTOR agrees that the minimum limits herein above designated shall be changed accordingly upon request by the City's Risk Manager.

The CONTRACTOR agrees that provisions of this section as to maintenance of insurance shall not be construed as limiting in any way the extent to which the CONTRACTOR may be held responsible for the payment of damages to persons or property resulting from the CONTRACTOR'S activities or the activities of any person or persons for which the CONTRACTOR is otherwise responsible.

All policies of insurance described shall be placed with insurers acceptable to CITY. The insurance underwriter(s) for all insurance policies except Workers' Compensation shall have an A.M. rating of [A-, VIII] or better, unless otherwise specified in Contract Documents.

ARTICLE X

Pursuant to Senate Bill 542, chaptered in 1999, the Employment Development Department (EDD) of the State of California requires that a W-9 Form be filed by all vendors for all AGREEMENTS entered into with the City. CONTRACTOR agrees to complete all required forms necessary to comply with EDD regulations.

ARTICLE XI

Term

This AGREEMENT shall be effective for a period beginning on the date shown in the Notice to Proceed, and ending on 35 days after the date of recordation of the Notice of Completion unless sooner terminated.

Liquidated Damages

1. Time is of the essence. Execution of this CIP Agreement by CONTRACTOR shall constitute acknowledgement by CONTRACTOR that CONTRACTOR understands, has ascertained and agrees that CITY will actually sustain damages in the amount fixed in the Contract Documents for each and every Day during which completion of Work required is delayed beyond expiration of time fixed for completion or extensions of time allowed pursuant to provisions hereof. CONTRACTOR and CITY agree that specified measures of liquidated damages shall be presumed to be the damages actually sustained by CITY as defined below, and that because of the nature of the Project, it would be impracticable or extremely difficult to fix the actual damages.

2. Liquidated damages shall be considered not as a penalty but as agreed monetary damage sustained by CITY for increased Project administration expenses, including extra inspection, construction management and architectural and engineering expenses related to the Project and Contract Documents because CONTRACTOR failed to perform and

complete Work within time fixed for completion or extensions of time allowed pursuant to provisions hereof. Liquidated damages shall not be deemed to include within their scope additional damages or administrative costs arising from Defective Work, lost revenues, interest expenses, cost of completion of the Work, cost of substitute facilities, claims and fines of regulatory agencies, damages suffered by others or other forms of liability claimed against CITY as a result of delay (e.g., delay or delay related claims of other contractors, subcontractors or tenants), and defense costs thereof. CONTRACTOR shall be fully responsible for the actual amount of any such damages it causes, in addition to the liquidated damages otherwise due CITY.

3. CITY in its sole discretion may deduct from any money due or to become due to CONTRACTOR subsequent to time for completion of entire Work and extensions of time allowed pursuant to provisions hereof, a sum representing then-accrued liquidated damages. Should CONTRACTOR fall behind the approved Progress Schedule, CITY may deduct liquidated damages based on its estimated period of late completion. CITY need not wait until Final Completion to withhold liquidated damages from CONTRACTOR's progress payments. Should money due or to become due to CONTRACTOR be insufficient to cover aggregate liquidated damages due, then CONTRACTOR forthwith shall pay the remainder of the assessed liquidated damages to CITY.

4. CONTRACTOR acknowledges that the quality and qualifications of the key personnel are important factors in this Agreement. CONTRACTOR and CITY agree that the services of the key personnel are a material term of this Agreement. CONTRACTOR and CITY agree further that the substitution or removal or change in role or level of effort of such key personnel may result in damages to the CITY, the measure of which would be impractical or extremely difficult to fix. In lieu such damages, CITY and CONTRACTOR have agreed to liquidated damages as described below:

    a. For any substitution of any key personnel individual before the end of the individual's Project commitment period provided in CONTRACTOR'S key personnel staffing schedule, CITY may assess once, and CONTRACTOR shall accept, liquidated damages in the amount of six (6) times the gross monthly salary for each substituted key personnel.

    b. Liquidated damages for substitution of key personnel shall be deducted from the next applicable Application for Payment or, if insufficient, shall be paid by CONTRACTOR upon CITY's written demand

    c. No liquidated damages shall be due under this section for any substitution required due to death, incapacity or employment termination of a key personnel.

<u>COVID-19</u>

Prior to execution of the Agreement, the State of California declared a state of emergency and issued a stay at home order in connection with the COVID-19 pandemic, and the County of Los

Angeles ("County") issued numerous orders relating to COVID-19, including without limitation an Order to Shelter in Place, originally dated March 17, 2020 (as subsequently extended and amended, including after the date of the Agreement, the "County Order"). In no event shall CONTRACTOR be entitled to any additional compensation in connection with any delay or costs associated with the COVID 19 pandemic, the County Order, or any other governmental requirements or regulations in connection therewith, whether currently existing or hereinafter enacted. In the event of any conflict between the terms of this Section and any other provision of the Agreement, in all events, the terms of this Section shall control.

CONTRACTOR's safety and logistics plans prepared in connection with this Contract specifically takes into account the COVID-19 Pandemic, the County Order, and all other governmental requirements or regulations regarding COVID-19 as of the date of the Contract, including without limitation all safety measures required.

Safety of Persons and Property. CONTRACTOR shall comply with, and give notices required by applicable laws, statutes, ordinances, codes, rules and regulations, and lawful orders of public authorities, bearing on safety of persons or property or their protection from damage, injury, or loss, including without limitation the County Order and all other governmental requirements or regulations regarding COVID-19, all as may be amended from time to time.

Modification/Termination

No modification, amendment or other change in this AGREEMENT or any provision hereof shall be effective for any purpose unless specifically set forth in writing and signed by duly authorized representatives of the parties hereto. This AGREEMENT may be terminated with or without cause by CITY giving CONTRACTOR thirty (30) days advance written notice. Any reduction of services shall require thirty (30) days advance written notice unless otherwise agreed in writing between CONTRACTOR and CITY. In the event of termination, CONTRACTOR shall be entitled to compensation for all satisfactory services completed and materials provided to the date of the notice of termination.

Non-Effect Waiver

CONTRACTOR's or CITY's failure to insist upon the performance of any or all of the terms, covenants, or conditions of this Agreement, or failure to exercise any rights or remedies hereunder, shall not be construed as a waiver or relinquishment of the future performance of any such terms, covenants, or conditions, or of future exercise of such rights or remedies, unless otherwise provided for herein.

Severability

In the event that any one or more of the provisions contained in this AGREEMENT shall for any reason be held to be unenforceable in any respect by a court of competent jurisdiction, such holding shall not affect any other provisions of this AGREEMENT, and the AGREEMENT shall then be construed as if such unenforceable provisions are not a part hereof.

Governing Law

This AGREEMENT shall be construed and interpreted and the legal relations created thereby shall be determined in accordance with the laws of the State of California.

Compliance with Law

CONTRACTOR shall comply with all applicable laws, ordinances, codes, and regulations of the federal, state, and local government. CONTRACTOR shall comply with all aspects of the National Pollutant Discharge Elimination System (NPDES) in order to prevent pollution to local waterways. Failure to implement NPDES Requirements shall result in project delays through City issued Stop Work Notices and/or fines levied against the CONTRACTOR. CONTRACTOR represents that the CONTRACTOR agrees to comply with all applicable federal and state workplace and employment laws including those that relate to minimum hours and wages, occupational health and safety, workers compensation insurance and state, county and local orders.

Conflict of Interest

CONTRACTOR will comply with all conflict of interest laws and regulations including, without limitation, CITY's conflict of interest regulations.

Prevailing Wages

CONTRACTOR's work is considered a "Public Works project" subject to the payment of prevailing wages. CONTRACTOR stipulates that it shall comply with all applicable wage and hour laws, including without limitation, California Labor Code §§ 1776 and 1810-1815. Failure to so comply shall constitute a default under this Contract. Further, all public works projects valued at $30,000 or more must include an obligation to hire apprentices, unless the craft or trade does not require the use of apprentices, as indicated in the corresponding prevailing wage determination. This duty applies to all contractors on a public works project, even if their part of the project is less than $30,000.

CONTRACTOR and its Subcontractors shall pay to persons performing labor in and about the project provided for in the Contract Documents an amount equal to or more than the general prevailing rate of per diem wages for (1) work of a similar character in the locality in which the Work is performed and (2) legal holiday and overtime work in said locality. The per diem wages shall be an amount equal to or more than the stipulated rates contained in a schedule that has been ascertained and determined by the Director of the State Department of Industrial Relations and Owner to be the general prevailing rate of per diem wages for each craft or type of workman or mechanic needed to execute this Contract. The prevailing wage rates are available online at http://www.dir.ca.gov/dlsr. CONTRACTOR shall also cause a copy of this determination of the prevailing rate of per diem wages to be posted at each Site.

CONTRACTOR shall insert in every subcontract or other arrangement which CONTRACTOR may make for performance of Work or labor on Work provided for in the Contract, provision that Subcontractor shall pay persons performing labor or rendering service under subcontract or other

arrangement not less than the general prevailing rate of per diem wages for work of a similar character in the locality in which the Work is performed, and not less than the general prevailing rate of per diem wages for holiday and overtime work fixed in the California Labor Code.

CONTRACTOR and its Subcontractors shall keep an accurate record showing the name of and actual hours worked each calendar day and each calendar week by each worker employed by him or her in connection with the Project. The record shall be kept open at all reasonable hours to the inspection Owner and to the Division of Labor Standards Enforcement.

CONTRACTOR and its Subcontractors must keep accurate payroll records, showing the name, address, social security number, work classification, straight time and overtime hours worked each day and week, and the actual per diem wages paid to each journeyman, apprentice, worker, or other employee employed by him or her in connection with the Work of the Contract Documents. Each payroll record shall contain or be verified by a written declaration as required by Labor Code Section 1776.

With each application for payment, CONTRACTOR shall also deliver certified payrolls directly to the Labor Commissioner in the format prescribed by the Labor Commissioner.

CONTRACTOR shall indemnify, hold harmless and defend (with counsel reasonably acceptable to CITY) CITY against any claim for damages, compensation, fines, penalties or other amounts arising out of the failure or alleged failure of any person or entity to pay prevailing wages as required by law or to comply with the other applicable provisions of Labor Code Sections 1720 et seq. and implementing regulations of the Department of Industrial Relations in connection with execution of the improvements or any other work undertaken or in connection with the Public Works project.

PROTECTION OF RESIDENT WORKERS. The City of Santa Clarita actively supports the Immigration and Nationality Act (INA), which includes provisions addressing employment eligibility, employment verification, and nondiscrimination. Under the INA, employers may hire only persons who may legally work in the United States (i.e., citizens and nationals of the U.S.) and aliens authorized to work in the U.S. The employer must verify the identity and employment eligibility of anyone to be hired, which includes completing the Employment Eligibility Verification Form (I-9). The Contractor shall establish appropriate procedures and controls so no services or products under the Contract Documents will be performed or manufactured by any worker who is not legally eligible to perform such services or employment.

ELECTRONIC TRANSMISSION OF CONTRACT AND SIGNATURE.

The Parties agree that this Agreement may be transmitted and signed by electronic mail by either/any or both/all Parties, and that such signatures shall have the same force and effect as original signatures, in accordance with California Government Code section 16.5 and Civil Code section 1633.7.

(SIGNATURES ON NEXT PAGE)

The parties hereto for themselves, their heirs, executors, administrators, successors, and assigns do hereby agree to the full performance of the covenants herein contained and have caused this AGREEMENT to be executed in duplicate by setting hereunto their names and titles on this date of .

CONTRACTOR: CONTRACTOR Name: _____

Address: _____

Phone & Fax No. _____

Signed By: _____

Print Name & Title:_____

CONTRACTOR's License No. _____

Class _____

CITY: _____ Date: _____
City Manager of the City of Santa Clarita

Approved as to Form: _____ Date: _____
City Attorney of the City of Santa Clarita

LABOR AND MATERIALS BOND

Bid #CIP-25-26-P2021REBID
Newhall Park Pool Pump Room
Replacement REBID2 City Project No.
P2021 *City of Santa Clarita, California*

KNOW ALL PERSONS BY THESE PRESENTS that_____.,
as CONTRACTOR AND_____, as SURETY, are

held and firmly bound unto the City of Santa Clarita, as CITY, in the penal sum of

_____ dollars ($_____), which is one-hundred (100%) percent of the total amount for the above stated project, for the payment of which sum, CONTRACTOR and SURETY agree to be bound, jointly and severally, firmly by these presents.

THE CONDITIONS OF THIS OBLIGATION ARE SUCH that, whereas CONTRACTOR has been awarded and is about to enter into the annexed Contract Agreement with CITY for the above-stated project, if CONTRACTOR or any subcontractor fails to pay for any labor or material of any kind used in the performance of the work to be done under said contract, or fails to submit amounts due under the State Unemployment Insurance Act with respect to said labor, SURETY will pay for the same in an amount not exceeding the sum set forth above, which amount shall insure to the benefit of all persons entitled to file claims under the State Code of Civil Procedures; provided that any alterations in the work to be done, materials to be furnished, or time for completion made pursuant to the terms of the contract documents shall not in any way release either CONTRACTOR or SURETY, and notice of said alterations is hereby waived by SURETY.

IN WITNESS WHEREOF, the parties hereto have set their names, titles, hands, and seals, this_____day of _____, 20___.

CONTRACTOR: _____
Name and Title of Signatory Signature

_____
Legal Name of Bidder

_____
Bidder Address

_____ _____
Telephone Number Federal Tax I.D. No.

SURETY*: _____
Name

_____
Phone Number and Email

_____
Address

Surety signatures must be notarized prior to submittal.

FAITHFUL PERFORMANCE BOND

Bid #CIP-25-26-P2021REBID
Newhall Park Pool Pump Room Replacement REBID2
City Project No.P2021
City of Santa Clarita, California

KNOW ALL MEN BY THESE PRESENTS that _____, as CONTRACTOR, AND _____, as SURETY, are held and firmly bound unto the City of Santa Clarita, as AGENCY, in the penal sum of _____ dollars ($_____), which is one-hundred (100%) percent of the total amount for the above-stated project, for the payment of which sum, CONTRACTOR and SURETY agree to be bound, jointly and severally, firmly by these presents. For service contracts of a continuing nature, the bond shall be in the amount equal to the amount of the initial contract term. Thereafter, the bond shall be in an amount equal to the annual value of such contract. The term of the bond shall cover the initial contract term. Thereafter, CONTRACTOR and SURETY must submit a new or renewed bond covering each subsequent annual renewal of the contract.

THE CONDITIONS OF THIS OBLIGATION ARE SUCH that, whereas CONTRACTOR has been awarded and is about to enter into the annexed Contract Agreement with AGENCY for the above-stated project, if CONTRACTOR faithfully performs and fulfills all obligations under the contract documents in the manner and time specified therein, then this obligation shall be null and void, otherwise it shall remain in full force and effect in favor of AGENCY; provided that any alterations in the obligation or time for completion made pursuant to the terms of the contract documents shall not in any way release either CONTRACTOR or SURETY, and notice of such alterations is hereby waived by SURETY.

IN WITNESS WHEREOF, the parties hereto have set their names, titles, hands, and seals, this day_____of _____, 20___.

CONTRACTOR: _____
Name and Title of Signatory Signature

_____
Legal Name of Bidder

_____
Bidder Address

_____ _____
Telephone Number Federal Tax I.D. No.

SURETY*: _____
Name

_____
Phone Number and Email

_____
Address

Surety signatures must be notarized prior to submittal.

Fringe Benefit Statement

Contract/Proposal No:	Project Name:	Date:
	INSTRUCTIONS: Fringe Benefit rates can be used for checking payrolls or applied to Force Account work which may be done on the above contract the hourly rates for fringe benefits, subsistence and/or travel allowance payment (as required by collective bargaining agreements) made for employees on the various classes of work are tabulated below. THIS DOCUMENT CONTAINS PERSONAL INFORMATION AND, PURSUANT TO CIVIL CODE 1796.21, IT SHALL BE KEPT CONFIDENTIAL IN ORDER TO PROTECT AGAINST UNAUTHORIZED DISCLOSURE.	

Classification:	Effective Date:	Subsistence or Travel Pay:

	Health and Welfare	Trust Fund Paid to:(Name)
	$	Address:
	Pension	Trust Fund Paid To:(Name)
	$	Address:
	Vacation/Holiday	Trust Fund Paid to:(Name)
	$	Address:
	Training	Trust Fund Paid To:(Name)
	$	Address:
	Other	Trust Fund Paid To:(Name)
	$	Address:

Classification:	Effective Date:	Subsistence or Travel Pay:

	Health and Welfare	Trust Fund Paid to:(Name)
	$	Address:
	Pension	Trust Fund Paid To:(Name)
	$	Address:
	Vacation/Holiday	Trust Fund Paid to:(Name)
	$	Address:
	Training	Trust Fund Paid To:(Name)
	$	Address:
	Other	Trust Fund Paid To:(Name)
	$	Address:

Classification:	Effective Date:	Subsistence or Travel Pay:

	Health and Welfare	Trust Fund Paid to:(Name)
	$	Address:
	Pension	Trust Fund Paid To:(Name)
	$	Address:
	Vacation/Holiday	Trust Fund Paid to:(Name)
	$	Address:
	Training	Trust Fund Paid To:(Name)
	$	Address:
	Other	Trust Fund Paid To:(Name)
	$	Address:

Supplemental statement must be submitted during the progress of work should a change in rate of any of the classifications be made.

I CERTIFY THAT THE FRINGE BENEFIT PAYMENTS ARE MADE TO THE APPROVED PLANS, FUND OR PROGRAMS LISTED ABOVE

(Contractor/Subcontractor)	By (Name and Title)	Signature

SECTION F

General & Special Provisions

PART 1 - GENERAL PROVISIONS

The following Special Provisions supplement and amend the Standard Specifications for Public Works Construction, 2018 Edition.

TABLE OF CONTENTS

1-2 TERMS AND DEFINITIONS
1-3 ABBREVIATIONS
1-3.2 Common Usage
1-6 BIDDING AND SUBMISSION OF THE BID
1.6-1 General
1-6.2 SUBCONTRACTOR Listing
1-7 AWARD AND EXECUTION OF THE CONTRACT
1-7.1 General
1-7.2 Contract Bonds
2-1 WORK TO BE DONE
2-1.1 Project Constraints
2-2 PERMITS
2-2.1 General
2-2.2 Caltrans Encroachment Permit
2-2.3 Compliance with the Los Angeles County Flood Control District.
2-2.3 Compliance with the Los Angeles County Department of Public Works.
2-2.4 Compliance with the Department of the Army Corps of Engineers.
2-2.5 Compliance with the Department of Fish and Wildlife.
2-3 RIGHT-OF-WAY
2-5 THE CONTRACTOR'S EQUIPMENT AND FACILITIES
2-5.1 General
2-5.2 Temporary Utility Services
2-5.4 Haul Routes.
2-7 CHANGES INITIATED BY THE AGENCY
2-7.1 General
2-7.2 Balancing Change Order.
2-7.3 Surety Notification
3-2 SELF-PERFORMANCE
3-3 SUBCONTRACTORS.
3-5 INSPECTION
3-6 THE CONTRACTOR'S REPRESENTATIVE
3-7 CONTRACT DOCUMENTS
3-7.1 General
3-8 SUBMITTALS
3-8.1 General
3-8.2 Working Drawings
3-8.3 Shop Drawings
3-8.4 Supporting Information

3-8.7 Pre-Construction Submittals
3-8.8 Submittals Schedule
3-10 SURVEYING
3-10.1 General
3-10.3 Payment
3-10.1 General
3-12 WORK SITE MAINTENANCE
3-12.2 Air Pollution Control
3-12.3 Noise Control
3-12.4 Storage of Equipment and Materials
3-12.6 Water Pollution Control
3-14 CONSTRUCTION AND DEMOLITION MATERIALS MANAGEMENT
3-15 NONCOMPLIANCE WITH THE PLANS AND SPECIFICATIONS
3-16 CONTRACT RECORD DOCUMENTS
3-16.1 Close-Out Submittals and Activites
4-1 GENERAL
4-4 TESTING
4-6 TRADE NAMES
5-3 LABOR
5-3.1 General
5-3.2 Prevailing Wages
5-3.6 Work Records
5-4 INSURANCE
5-4.1 General
5-4.2 General Liability Insurance
5-4.3 Workers' Compensation Insurance
5-4.4 Auto Liability Insurance
5-7 SAFETY
5-7.1 Work Site Safety
5-7.9 Temporary Manhole Shaft Covers
5-7.10 Temporary Asphalt Concrete
5-7.11 Protection of the Public.
5-7.12 Notification to the Public
5-7.13 Parking Restrictions and Posting for Tow Away
6-1 CONSTRUCTION SCHEDULE AND COMMENCEMENT OF THE WORK
6-1.1 Construction Schedule
6-1.2 Commencement of the Work
6-2 PROSECUTION OF THE WORK
6-2.1 General
6-2.2 Work by Others Due to Unsatisfactory Work Prosecution
6-2.3 Sequence of Work
6-3 TIME OF COMPLETION
6-3.1 General
6-4 DELAYS AND EXTENSIONS OF TIME

6-4.1 General
6-5 USE OF IMPROVEMENT DURING CONSTRUCTION
6-9 LIQUIDATED DAMAGES
6-10 CONSTRUCTION PROGRESS MEETINGS
7-2 LUMP SUM WORK
7-3 PAYMENT
7-3.1 General
7-3.2 Partial and Final Payment
7-3.3 Delivered Materials
7-3.4 Mobilization/ Demobilization
7-3.5 Contract Unit Prices
7-3.9 Allowance Items
7-4.2 Basis for Establishing Costs
7-4.3 Markup
7-6 FINAL PAY ITEMS
8-1 GENERAL.
9-1 NOTICE OF POTENTIAL CLAIM
9-2 CLAIMS

SECTION 1 – GENERAL

1-2 TERMS AND DEFINITIONS.

Replace the following definitions:

Agency- The Agency is the City of Santa Clarita.

Board – The City Council of the City of Santa Clarita.

Engineer – The Director of Public Works of the City of Santa Clarita or his/her designee.

Add the following definitions:

Allowance – An amount established in the Bid by the Agency for the purpose of reimbursing the Contractor for its actual expenses plus the specified markup for an item of work.

Balancing Change Order – A Change Order limited to the increase or decrease between the Bid quantity and the actual quantity of each Contract Unit Price. Bid item constructed in conformance with the Contract Documents.

Bid Guaranty – The cash, certified check or Bidder's surety bond accompanying the Bid as a guaranty that the Bidder will enter into a Contract with the Board for the performance of the work.

City – The City of Santa Clarita.

Contract Time – The time, in Working Days, specified for completion of the work.

County – The County of Los Angeles.

Field Order – A change order issued by the Engineer which does not increase the Contract Price.

Notice of Completion – A notice filed by the Agency pursuant to Civil Code Section 8180.

Notice of Potential Claim – A written notice addressed to the Agency discussing and describing the contractual basis for its request for additional compensation and/additional Contract Time, and the amount of requested additional compensation and/or Contract Time.

Owner – Same as the definition for City.

Project – See Work.

Quality Assurance – Those standards, systems, processes, procedures, and activities exercised by the Agency and the Engineer to ensure that the work is constructed by the Contractor in accordance with the Contract Documents.

Quality Control – Those standards, systems, processes, procedures, and activities exercised by the Contractor to ensure that the work is constructed in accordance with the Contract Documents.

1-3 ABBREVIATIONS.

1-3.2 Common Usage.

Add the following abbreviations:

Abbreviation	**Word or Words**
BMP	Best Management Practice
CDMMP	Construction and Demolition Materials Management Plan
LACFCD	Los Angeles County Flood Control District
LACDPW	Los Angeles County Department of Public Works
NTP	Notice to Proceed
SCAQMD	South Coast Air Quality Management District
SCE	Southern California Edison
SCG	Southern California Gas
SCVWA	Santa Clarita Valley Water Agency
SSPWC	Standard Specification of Public Works Construction
SWPPP	Storm Water Pollution Prevention Plan
WPCP	Water Pollution Control Program

1-6 BIDDING AND SUBMISSION OF THE BID.

1.6-1 General.

Replace the entire paragraph with the following:

Bidding and submission of the Bid shall conform to the requirements specified in the Instructions to Bidders and the Notice Inviting Bids.

1-6.2 SUBCONTRACTOR Listing.

Replace subheading a) with the following:

a) The name, the location of the place of business, the California contractor license number, and public works contractor registration number issued pursuant to Section 1725.5 of the Labor Code of each SUBCONTRACTOR who will perform work or labor or render service to the prime contractor in or about the construction of the work or improvement, or a SUBCONTRACTOR licensed by the State of California who, under subcontract to the prime contractor, specially fabricates and installs a portion of the work or improvement according to detailed drawings contained in the plans and specifications, in an amount in excess of one-half of 1 percent of the prime contractor's total bid or, in the case of bids or offers for the construction of streets or highways, including bridges, in excess of one-half of 1 percent of the prime contractor's total bid or ten thousand dollars ($10,000), whichever is greater.

1-7 AWARD AND EXECUTION OF THE CONTRACT.

1-7.1 General.

Replace the entire paragraph with the following:

Award and execution of the Contract shall conform to the requirements and procedures specified in the Instructions to Bidders and the following.

Within 10 Days after the date of the AGENCY's Notice of Award, the CONTRACTOR shall execute and return the following to the AGENCY:

a) Capital Improvement Project Agreement

b) Faithful Performance Bond
c) Labor and Material Bond
d) Insurance Required by Contract
e) W-9 Form

Failure to comply with the above will result in annulment of the award and forfeiture of the BID GUARANTY.

A corporation to which an award is made may be required, before the Contract Agreement is executed by the AGENCY, to furnish evidence of its corporate existence, of its right to enter into contracts in the State of California, and that the officers signing the Contract Agreement and bonds for the corporation have the authority to do so.

The Contract Agreement shall not be considered binding upon the AGENCY until executed by the CITY ATTORNEY.

1-7.2 Contract Bonds.

Replace the third paragraph with the following:

The Bidder shall provide two good and sufficient surety bonds. The "Payment Bond" (Labor and Material Bond) shall not be less than 100 percent of the Contract Price, to satisfy claims of material suppliers and mechanics and labors employed by it on the Work. The Payment Bond shall be maintained by the CONTRACTOR in full force and effect until 60 Days after the date of recordation of the Notice of Completion, or until all claims for material and labor are paid, whichever is greater.

SECTION 2 - SCOPE OF THE WORK

2-1 WORK TO BE DONE.

Add the following:

The estimated quantities of work and materials to be performed, constructed or furnished by the Contractor under this Contract are as shown on the Bid Schedule and the Alternate Items Bid Schedule.

Add the following subsection:

2-1.1 Project Constraints.

The project contains a number of conditions/ factors that may constrain the Contractor's work. These conditions include, but are not limited to:

- The existing pool deck, community center, access sidewalk, and school are located in the vicinity of the project. The Contractor and their forces must remain within the limits of the project right-of-way, and any temporary construction easements acquired by the City when performing the Work near these properties. The Contractor shall comply with noise and work hours restrictions unless otherwise allowed by the City. No construction parking is allowed in the adjacent residential, commercial, and retail sites.
- The sidewalk adjacent to the project must remain open and unobstructed at all times
- Access to the adjacent properties/buildings shall remain open at all times
- Existing utilities (storm drain, water lines, SCE, etc.) are within the project area. Some of these utilities are slated for proposed new improvements and/or extension as part of this project, but others must be protected in place during construction

All costs associated with adhering to the "Project Constraints" shall be included in the various items of work, and no additional compensation shall be allowed.

2-2 PERMITS.

Add the following before the first paragraph:

2-2.1 General.

Replace the first sentence with the following:

The CONTRACTOR will obtain all permits necessary to perform the Work in streets, highways, railways or other rights-of way. All Agency permits will be issued at no cost to the CONTRACTOR.

2-3 RIGHT-OF-WAY.

Delete the last sentence and add the following:

The Contractor shall conduct all of its activities and operations within the rights of way provided by the Agency or within the confines of public thoroughfares. The Contractor shall not allow its employees to use private property for any reason or to use water or electricity from such property without written permission from the owner.

If, for any reason, the Contractor elects to encroach upon other lands, it shall first obtain written permission from the owner and provide evidence of such permission in writing to the Engineer prior to entering upon such lands. In performing any work or doing any activity on lands outside of public rights of way, the Contractor shall comply with all applicable Federal, State and local laws, ordinances, and regulations.

The Contractor shall indemnify and hold the Agency harmless from all claims or suits for damages occasioned by such work or activity, whether done in compliance with this subsection and with permission from the owner or in violation of this subsection without permission from the owner.

2-5 THE CONTRACTOR'S EQUIPMENT AND FACILITIES.

2-5.1 General.

Add the following:

The CONTRACTOR and its SUBCONTRACTORS and suppliers shall not start, operate, move, or idle their equipment prior to the time specified for starting work each Working Day unless otherwise approved by the Engineer.

2-5.2 Temporary Utility Services.

Add the following:

The CONTRACTOR shall make arrangements with Santa Clarita Valley Water Agency or the appropriate local water agency to obtain water from designated fire hydrants at or near the project for use in dust control and soil compaction. It shall be the responsibility of the CONTRACTOR to pay for the water and any deposits required.

2-5.4 Haul Routes.

Replace the entire section with the following:

Unless otherwise specified in the Special Provisions, haul routes shall be selected by the Contractor and approved by the Engineer.

2-7 CHANGES INITIATED BY THE AGENCY.

2-7.1 General.

Add the following after the first paragraph:

The Engineer may at any time, as the need arises, order changes within the scope of the Work without invalidating the Agreement. If such changes increase or decrease the Contract Price, or the Contract Time, an equitable adjustment will be authorized by issuance of a Change Order. The CONTRACTOR shall not execute such changes pending the receipt of an executed Change Order or further instructions from the Engineer.

Each Change Order shall not be considered approved until executed by the AGENCY.

The Engineer may, at any time, request changes to the Plans, Specifications, quantities of Contract Unit Price Bid items, and other details of the Work by issuance of a Field Order. The CONTRACTOR shall proceed with the performance of any changes in the Work so ordered by the Engineer unless the CONTRACTOR believes that such Field Order entitles it to a change in the

Contract Time. Thereafter the CONTRACTOR shall submit the basis for a change in the Contract Time within 5 Days.

The Engineer has authority to order changes in the Work, which do not result in a change in the Contract Price or the Contract Time and are not inconsistent with the Contract Documents. The Contractor agrees that such changes are within the scope of the Work and do not constitute the basis for an adjustment of either the Contract Price or the Contract Time.

Add the following subsection(s):

2-7.2 Balancing Change Order.

Throughout the duration of the Contract, the Contractor shall perform field measurements and associated calculations documenting the quantity of each Contract Unit Price Bid item. The Contractor shall submit the documentation to the Engineer each month prior to the date for request of the progress payment. The Engineer will independently measure and calculate the aforementioned quantities. In the case of a difference in the quantities, the quantity calculated by the Engineer shall prevail.

Upon completion of the Work per 3-13.1, the Contractor and the Engineer shall meet to discuss the final quantities of each Contract Unit Price Bid item. If the quantity of each item cannot be agreed upon, the quantity determined by the Engineer shall prevail.

After determination of the final quantities, the Agency will issue a Balancing Change Order for the difference between the Bid quantity and final quantity of each Contract Unit Price Bid item constructed in accordance with the Contract Documents and the associated adjustment in the Contract Price per 7-3.5.

2-7.3 Surety Notification.

The Contractor shall **notify** its sureties of any Change Orders affecting the scope of the Work or change in the Contract Price, or Contract Time, or a combination thereof. The amount of the applicable Bonds and insurance coverage shall be adjusted accordingly. The CONTRACTOR shall furnish proof of such adjustments to the Engineer.

SECTION 3 - CONTROL OF THE WORK

Replace the entire subsection with the following:

The Contractor shall perform, with its own organization, Contract work amounting to at least **fifty percent (50%)** of the Contract Price, except that any designated "Specialty Items" may be performed by subcontract and the amount of any such "Specialty Items" so performed will be deducted from the Contract Price before computing the amount required to be performed by the Contractor with its own organization. Where an entire Bid item is subcontracted, the value of work subcontracted will be based on the Contract Unit Price. When a portion of a Bid item is subcontracted, the value of work subcontracted will be based on the estimated percentage of the Contact Unit Price. This will be determined from information submitted by the Contractor, and subject to approval by the Engineer.

3-3 SUBCONTRACTORS.

Add the following:

Attention is directed to the provisions in Sections 10262 and 10262.5 of the Public Contract Code and Section 7108.5 of the Business and Professions Code concerning prompt payment to SUBCONTRACTORS.

The CONTRACTOR shall return all moneys withheld in retention from the SUBCONTRACTOR within 30 days after receiving payment for work satisfactorily completed, even if the other contract work is not completed and has not been accepted in conformance with Section 3-13 of the SSPWC. This requirement shall not be construed to limit or impair any contractual, administrative, or judicial remedies otherwise available to the CONTRACTOR or SUBCONTRACTOR in the event of a dispute involving late payment or nonpayment by the CONTRACTOR or deficient subcontract performance or noncompliance by a SUBCONTRACTOR.

3-5 INSPECTION.

Replace the second sentence with the following:

The Contractor shall notify the Engineer 48 working hours in advance of the start of the Work and the start of specialized items which require inspection.

The CITY will make, or have made, such inspections and tests, as deemed necessary to see that the Work is in conformance with the Contract Documents. In the event such inspections or tests reveal noncompliance with the Contract Documents, the Contractor shall bear the cost of such corrective measures as deemed necessary by the City, as well as the cost of subsequent re-inspection and re-testing.

Work done in the absence of inspection by the CITY may be required to be removed and replaced under the inspection of the CITY, and the entire cost of removal and replacement, including the cost of all materials which may be furnished by the CITY and used in the work thus removed, shall be borne by the Contractor, regardless of whether the work removed is found to be defective or not. Work covered without the approval of the CITY shall, if so directed, be uncovered to the extent required by the CITY, and the Contractor shall similarly bear the entire cost of performing all the work and furnishing all the materials necessary for the removal of the covering and its subsequent replacement, including all costs for additional inspection.

The CITY and any authorized representatives shall at all times have access to the Work during its construction at shops and yards as well as the Work site. The Contractor shall provide every reasonable

facility for ascertaining that the materials and workmanship are in accordance with the Contract Documents.

Inspection of the Work shall not relieve the Contractor of the obligation to fulfill all conditions of the contract.

3-6 THE CONTRACTOR'S REPRESENTATIVE.

Replace the sixth and seventh sentence with the following:

The Contractor's representative shall be on-site during the duration of construction, and shall be on site, accessible by cellular phone, and in coordination with SUBCONTRACTORS at all times. The Contractor cannot assign field personnel with no experience to be the Contractor's Representative, and the designated representative must be a non-working foreman.

Failure to follow the above requirements will result in, but not limited to, a liquidated damage of $1,000 per day per incident unless otherwise specified.

Failure of the designated representative(s) to faithfully prosecute the Work, including, but not limited to, failure to adhere to the Contractor's construction schedule shall be deemed grounds for removal from the Work per 5-3.1.

The City can at any time request a more experienced or qualified Contractor's Representative.

3-7 CONTRACT DOCUMENTS.

3-7.1 General.

Replace the last paragraph with the following:

Prior to the start of the Work, the Contractor shall identify and maintain for the Engineer a complete set of As-Built Plans and Specifications on the Project site as specified in Section 3-16.1.1.

The Contractor shall examine and compare the Contract Documents with each other and with the other information made available to the CONTRACTOR by the AGENCY and shall immediately notify the ENGINEER of any errors, inconsistencies, or omissions discovered. If the CONTRACTOR performs any construction activity knowing it involves a recognized error, inconsistency, or omission in the Contract Documents without notice to the ENGINEER, the CONTRACTOR shall assume responsibility for such performance and for the full costs for correction.

The CONTRACTOR shall perform field measurements, verify field conditions, and shall carefully compare such field measurements and conditions and other information known to the CONTRACTOR with the Contract Documents before commencing activities. Errors, inconsistencies, or omissions discovered shall be reported to the ENGINEER immediately.

If discrepancies are discovered between the drawings and specifications, and no specific interpretation is issued prior to bidding, the decision regarding this interpretation shall rest with the AGENCY. The Contractor shall be compelled to act on the AGENCY decision as directed. In the event the installation is not in compliance with the direction of the AGENCY, the installation shall be corrected by and at the expense of the Contractor at no additional cost to the City.

Add the following:

The Standard Specifications for Public Works Construction and the Standard Plans for Public Works Construction are both promulgated by Public Works Standards, Inc. These publications are available for purchase from BNi Building News, Inc., 1612 South Clementine Street, Anaheim, California 92802, (800) 873-6397, www.bnibooks.com. ***These publications are copyrighted and the Agency will not provide copies.***

Standard Plans of the Los Angeles County Department of Public Works are available for purchase in the Agency's Cashier's Office located at 900 South Fremont Avenue, Alhambra, California 91803, (626) 458-6959, or for downloading on the internet, www.ladpw.org/des/Design_Manuals/StandardPlan.pdf.

3-8 SUBMITTALS.

3-8.1 General.

Replace the second paragraph with the following:

The Contractor shall allow a minimum of twenty (20) Working Days for each review, unless otherwise approved by the Engineer. Review periods are not cumulative. The aforementioned time frames begin anew upon each submission whether the initial submission or a resubmission after a prior review by the Agency. Each set of submittals shall be accompanied by a letter of transmittal describing exactly what is being transmitted.

Add the following:

Submittals shall be submitted to:

City of Santa Clarita
23920 Valencia Blvd. Suite 300
Santa Clarita, CA 91355
Phone: ***(661) 284-1427***
Attention: ***Peter Henne***
Email: ***phenne@santa-clarita.com***

All submittals shall be submitted and approved prior to issuance of the Part 2 NTP unless otherwise specified herein or approved by the Engineer.

No work shall begin on the respective items of work which require a submittal until the submittals for those items of work have been approved in writing by the Agency. The Agency will receive, forward and coordinate the review of submittals with the appropriate agencies.

3-8.2 Working Drawings.

Add the following to Table 3-8.2:

Sheet Number	Title
G1.0	Title Sheet
G1.1	General Notes
G1.2	Erosion Control and Fencing Plan

D1.0	Site Demolition Plan
D2.0	Utility Demolition Plan
D3.0	Mechanical Demolition Plan
C1.0	Site and Utility Plan
C2.0	Grading and Drainage Plan
C2.1	Northing and Easting Table
C2.2	General Sections
C3.0	General Details
C3.1	General Details
C3.2	General Details
A1.0	Renderings
A1.1	Floor Plan
A1.2	Roof and Reflected Ceiling Plan
A2.1	Exterior Elevations
A2.2	Building Sections
A3.1	Window / Door Details and Schedules
A3.2	Roof Details
S0.1	Details – General Notes
S0.2	Details – General Notes
S0.3	Details - Typical
S0.4	Details - Typical
S0.5	Details - Typical
S1.1	Details – Foundation Plan
S1.2	Details – Roof Framing Plan
S2.1	Details
S2.2	Details
M1.0	Equipment Lists – Existing and New
M2.0	Equipment Layout Plan
M2.1	Piping Plan
M2.2	Building Footprint – Existing and New
M3.0	Pump Room Section
M3.1	Pump Room Section
M4.0	Pump Room Details
M4.1	Pump Room Details
M4.2	Pump Room Details
M4.3	Pump Room Details
M4.4	Pump Room Details
E0.0	General Notes
E0.1	Legend & Abbreviations
E1.0D	Single Line Diagram Demo
E1.0	Single Line Diagram Proposed
E2.0D	Electrical Site Demo Plan
E2.0	Electrical Site Plan

E3.0	Electrical Plan
E4.0	Lighting and Receptacle Plan
E4.1	Grounding Plan
E5.0	Cable & Conduit Schedules I
E5.1	Cable & Conduit Schedules II
E6.0	Elementary Control Diagram I
E6.1	Elementary Control Diagram II
E7.0	Electrical Details I
E7.1	Electrical Details II
E7.2	Electrical Details III
E8.0	Title 24 Indoor Lighting Form I
E8.1	Title 24 Indoor Lighting Form II
E8.2	Title 24 Outdoor Lighting Form I
E8.3	Title 24 Outdoor Lighting Form II
E8.4	Title 24 Power Distribution Form

Replace the fourth paragraph with the following:

Working Drawings shall be prepared, wet stamped, and signed by a licensed Engineer registered by the State of California.

3-8.3 Shop Drawings.

Add the following to Table 3-8.3:

Item	Subsection Number	Title	Subject

Add the following:

Shop Drawings shall be prepared, wet stamped, and signed by a Civil or Structural Engineer registered by the State of California.

Add the following subsection:

3-8.7 Pre-Construction Submittals.

The Contractor shall submit the following within 10 Days of the date of issuance of the Part 1 NTP per 6-1.2:

a) Permits to be obtained by the Contractor per 2-2.
b) List of all SUBCONTRACTORS per 3-3.
c) Submittal Schedule per 3-8.8.
d) Spill Prevention and Emergency Response Plan per 3-12.5.3.
e) BMP Plan per 3-12.6.3.
f) Qualified BMP Manager per 3-12.6.2.

g) Construction, Demolition, and Materials Management Plan [C&DMMP] per 3-14.
h) Notification Handbills per 5-7.12.
i) Baseline Construction Schedule per 6-1.1.
j) Detailed schedule of values for the lump sum Bid Item(s) specified in 7-2.
k) Crushed Aggregate Base Product Specifications, including manufacturer's and supplier's certification and test reports that materials delivered to the site conform to the specifications, per Section 200-2.2.
l) Concrete Mix Designs, including manufacturer's and supplier's certification and test reports that materials delivered to the site conform to the specifications, per 201-1.
m) Chain Link Fence and Gate submittals
n) Landscape and Irrigation submittals
o) Manufacturer's and supplier's certification and test reports that materials delivered to the site conform to the specifications
p) Subsurface installation location data to the Engineer per 402-1.1

Add the following subsection:

3-8.8 Submittals Schedule.

The Contractor shall prepare a schedule listing the submittals it has identified as being required and the date upon which each submittal will be made. Each submittal shall be identified on the baseline construction schedule and each update as an individual activity. ***The following specific submittals have been identified as critical to the project due to their procurement lead times possibly impacting construction timelines*** –

- Fiberglass Doors by Vale Door or approved equal
- Vertical Turbine Pump by Goulds
- Fence and associated gates by Ameristar or approved equal
- Electrical Panels
- Concrete Foundation Mix
- Overhead Roll-up Door
- Steel Reinforcement (including, but not limited to: foundation rebar, CMU block wall rebar, concrete flatwork rebar)
- Pump Station and Canopy Structure Metal Decking
- Any additional canopy structure related items (i.e. canopy steel columns and canopy fiber-cement siding)

The Agency review time frame specified in 3-8.1 shall be reflected on the submittal schedule and shown as an individual activity.

3-10 SURVEYING.

3-10.1 General.

Replace the first and second paragraph with the following:

The CONTRACTOR shall perform and be responsible for the accuracy of surveying adequate for construction. The Contractor shall preserve construction survey stakes and marks for the duration

of their usefulness. If any construction survey stakes are lost or disturbed and need to be replaced, such replacement will be performed by the Contractor at the expense of the Contractor.

The Contractor shall dig all holes necessary for line and grade stakes.

Add the following:

The CONTRACTOR shall perform and be responsible for surveying necessary to adequately construct the Work. This shall include providing digitized information and horizontal control of all hardscape construction items (curbs and gutters, walkways, stamped concrete, signs, adjoining AC pavement, etc.) shown on the Plans.

The CONTRACTOR shall provide the Engineer with the results of the survey and cut sheets before proceeding. Said surveying and staking shall be performed by a land surveyor, licensed to perform said work in the State of California. All survey work shall be performed to the satisfaction of the Engineer.

Refer to Section 400-2 for protection and re-establishment of permanent survey markers.

3-12 WORK SITE MAINTENANCE.

3-12.1 General

Add the following subsection:

3-12.1.1 Clean Up

The CONTRACTOR is responsible to keep streets within and adjacent to the construction area clean at all times. Any sweeping performed by the CITY crews due to the construction work shall be charged to the CONTRACTOR at overtime rates.

The CONTRACTOR shall, as directed by the ENGINEER, remove from all public and private property at its own expense all temporary structures, USA utility markings, rubbish and waste materials resulting from its operations. This includes temporary work area obtained by the CONTRACTOR.

All existing surfaces, whether asphaltic or concrete, portland cement concrete, permanent fencing and barriers, landscape material such as turf, trees, shrubs, gravel, etc., or other, shall, after construction, be restored to a condition at least equal to that which existed prior to construction. All restoration shall be in-kind except in those areas where details indicate to the contrary. The details of those areas will govern.

Restoration shall include, but not be limited to, the replacement of landscape planting and irrigation systems, and pavement striping which are disturbed by the CONTRACTOR's operations in the course of work. Immediately prior to completion of the work, all disturbed-soil areas, including the construction staging area, shall be stabilized with materials approved by the ENGINEER.

It shall be the CONTRACTOR's responsibility to conduct its operations in such a manner so as to prevent damage to existing substructures. In the event of substructure damage, the CONTRACTOR shall bear full responsibility and total expense for repair and/or replacement of said substructure.

Payment for this work shall be included in the lump sum Bid price for "MOBILIZATION/ DEMOBILIZATION". No separate or additional payment shall be made for Clean Up.

3-12.2 Air Pollution Control.

Add the following:

Dust generated from the CONTRACTOR's work area, or wind are all included in the definition of "dust" and shall be controlled. All activities shall be in compliance with the South Coast Air Quality Management District's (SCAQMD) Rule 403 Fugitive Dust requirements:

http://www.aqmd.gov/rules/reg/reg04/r403.pdf

High wind condition is defined as instantaneous wind speeds exceeding 25 miles per hour (SCAQMD Rule 403, (c), (19), High Wind Conditions).

Inactive Disturbed Surface Area means any disturbed surface area upon which active operation have not occurred or are not expected to occur for a period of 20 consecutive days. (SCAQMD Rule 403, (c), (20), Inactive Disturbed Surface Area).

Stabilized Surface means any previously disturbed surface area or open storage pile which, through the application of dust suppressants, shows visual or other evidence of surface crusting and is resistant to wind-driven fugitive dust and is demonstrated to be stabilized. Stabilization can be demonstrated by one or more of the applicable test methods contained in the Rule 403 Implementation Handbook. (SCAQMD Rule 403, (c), (31), Stabilized Surface).

Equipment shall be removed from the Work site as soon as it is no longer necessary. Within 24 hours of a request from the ENGINEER, the CONTRACTOR must remove equipment from the Work site that is no longer needed. Refusal by the CONTRACTOR to remove the equipment may be cause for withholding progress payments.

No separate or additional payment will be made for air pollution control. Payment shall be considered as included in the Contract Unit Prices or lump sum prices for the various Bid items.

3-12.3 Noise Control.

Add the following:

A noise level limit of 86 DBA at a distance of 50 feet shall apply to all construction equipment on or adjacent to the Work site or otherwise related to the Work whether owned by the CONTRACTOR or not.

3-12.4 Storage of Equipment and Materials.

3-12.4.1 General.

Add the following:

The Contractor is responsible for the storage of equipment and materials and to protect them from damage, vandalism, and theft.

If the disturbed project area is one acre or less, and where there is a potential to exceed one acre of disturbed soil due to storage of equipment and/or materials, the CONTRACTOR

shall install temporary fencing to contain ALL activities within an area of one acre or less. Any disturbed soil outside of the one acre or less area, shall be stabilized by the CONTRACTOR immediately using a method approved by the AGENCY. Failure to reduce the disturbed area to one acre or less may cause significant delays to the project schedule, in addition to significant financial penalties.

3-12.6 Water Pollution Control.

3-12.6.2 Best Management Practices (BMPs)

The Contractor shall implement and maintain the BMPs as described on Plan Sheet G1.2 in the Storm Water Pollution Prevention Notes.

3-14 CONSTRUCTION AND DEMOLITION MATERIALS MANAGEMENT.

The CONTRACTOR shall comply with the City's Construction and Demolition Material Management Ordinance, City of Santa Clarita Municipal Code Section 15.46, parts 1-3 and 5. This ordinance requires that at least 65 percent of all construction and demolition materials and inert wastes from construction, demolition, grading projects be diverted from landfills.

The CONTRACTOR shall submit a Construction and Demolition Materials Management Plan form (CDMMP) for approval in accordance with 3-8.8. The Part 2 Notice to Proceed will not be issued until the plan has been approved.

The CDMMP shall provide all of the information set forth in Section 15.46.300 of the City's Municipal Code. The CDMMP must show that the diversion requirement will be met.

The following 3 conditions must be met in order to obtain final payment:

1. Within 10 Days or prior to the Agency filing the Notice of Completion, after the completion of the Work per 3-13.1, the CONTRACTOR shall submit documentation that the diversion requirement for the Project has been met.

    a. Receipts and gate tickets from the vendor or facility which collected or received construction and demolition material showing the actual weight of that material or, in the case of inert waste, removed from the solid waste stream and not disposed of in a solid waste landfill:

    b. A copy of the previously approved CDMMP for the Project adding the actual volume or weight of each type of construction and demolition material diverted and transported for disposal in a landfill or transformation facility, or, in the case of inert waste, removed from the solid waste stream and not disposed of in a solid waste landfill;

    c. Any additional information the CONTRACTOR believes is relevant to determining its efforts to comply in good faith with this requirement.

2. The Agency will review the information submitted and determine whether the CONTRACTOR complied with the approved CDMMP.

3. If the Agency determines that the CONTRACTOR has fully complied with the CDMMP Agency will authorize final payment. If the Agency determines that the CONTRACTOR has not fully complied with the CDMMP within 30 days of completion of the work, the Contractor shall pay to the Agency, or have withheld from monies due it, the sum of two percent (2%) of the total contract amount or $15,000, whichever is less.

3-15 NONCOMPLIANCE WITH THE PLANS AND SPECIFICATIONS.

Failure of the Contractor to comply with any requirement of the Plans and Specifications, and to immediately remedy any such noncompliance upon notice from the Engineer, may result in suspension of Contract progress payments on all items of work. Any progress payments so suspended shall remain in suspension until the Contractor's operations are brought into compliance to the satisfaction of the Engineer. Upon determination by the Engineer that the Contractor is in compliance, progress payments will resume for those items of work which have been constructed in conformance with the Plans and the Specifications. No additional compensation shall be due the Contractor as a result of the suspension of progress payments due to noncompliance with the Plans and Specifications.

3-16 CONTRACT RECORD DOCUMENTS.

3-16.1 Close-Out Submittals and Activites.

Prior to final payment being made, the Contractor shall complete the following list of submittals and activities:

a) Submission of a completed list of deficiencies ("punch list") approved by the Engineer.
b) As-Built Plans/ Record Drawings.
c) All Labor Compliance Forms and approved CPR's.
d) Final CDMMP and weight delivery tickets.
e) Operations and Maintenance Manuals.
f) Warranties.
g) Completion of required training
h) Removal of all construction area signs and USA markings.
i) Final approval and closure of all issued permits.
j) Completion of Planting Establishment Period and Landscape Maintenance District Turn Over Sheet Acceptance

3-16.1.1 As-Built Plans.

Prior to the start of the Work, the CONTRACTOR shall identify and maintain for the ENGINEER a complete set of As-Built Plans and Specifications on the Project site at all times. All final locations determined in the field, and any deviations from the Plans and Specifications, shall be marked in red to show the as-built conditions. The CONTRACTOR shall update this set daily, showing every change from the original~~s~~, including exact as-built locations, sizes and types of underground piping, valves, equipment, and all other work not visible at surface grade.

The As-Built Plans shall graphically show all as-built conditions, locations, configurations, and other details which vary from the details shown on the originals including all revisions made necessary by Addenda, Change Orders, and to meet field conditions.

In the case of details shown on the Plans which are superseded by approved Working Drawings or Shop Drawings, the As-Built Plans shall be updated by noting or graphically showing how those details are superseded.

Prior to submitting each monthly progress payment request, the CONTRACTOR shall request the ENGINEER'S approval of the current As-Built Plans. The ENGINEER'S approval will be a prerequisite to approval of requests for each progress and final payment. The AGENCY will withhold **$1,000** for each month that the As-Built Plans are deemed deficient by the ENGINEER.

The CONTRACTOR shall deliver the As-Built Plans to the ENGINEER within 10 Days of completion of the Work.

No separate or additional payment will be made for the preparation and maintenance of As-Built Plans and Specifications. Payment shall be considered as included in the Contract Unit Price for the various Bid items.

SECTION 4 - CONTROL OF MATERIALS

4-1 GENERAL.

Add the following:

The CONTRACTOR and all SUBCONTRACTORS, suppliers, and vendors, shall guarantee that the entire work will meet all requirements of this contract as to the quality of materials, equipment, and workmanship. The CONTRACTOR, at no cost to the CITY, shall make repairs or replacements made necessary by defects in materials, equipment, or workmanship that become evident within a **one-year period**, after the date of recordation of the Notice of Completion. Within this one-year period, the CONTRACTOR shall also restore to full compliance with requirements of this contract portions of the work that are found to not meet those requirements. The CONTRACTOR shall hold the City harmless from claims of any kind arising from damages due to said defects or noncompliance. Repairs, replacements, and restorations shall be made within 30 days after the date of the ENGINEER's written notice.

4-4 TESTING.

Delete the last two sentences of the first paragraph. Add the following after the first paragraph:

All necessary materials and/or compaction testing will be performed by an AGENCY approved testing laboratory. Except as elsewhere specified, the testing of materials and/or compaction, which meet or exceed the requirements specified in the Contract Documents will be performed at no expense to the Contractor. If the initial testing determines the material and/or compaction does not conform to the requirements of the Contract Documents, subsequent testing will be performed by the AGENCY at the Contractor's expense. Additional testing, if deemed necessary by the ENGINEER, of materials and/or compaction, which previously met or exceeded the requirements specified in the Contract, will be performed by the AGENCY at the Contractor's expense. The cost of testing performed at the Contractor's expense will be deducted from a progress payment or the final payment.

CONTRACTOR shall submit to the City Project Manager, on the CITY's standard form, requests for material testing at least 2 working days before the required material test is needed.

4-6 TRADE NAMES.

Replace the entire subsection with the following:

Pursuant to the Public Contract Code, Section 3400, the Contractor may supply any of the products or materials specified or offer an equivalent, except for ***the Gould's vertical turbine pump and BECs chemical controller.***. Pursuant to Public Contract Code 3400, the Board has made a finding that the ***Gould's VIT-DITM 11CLC vertical turbine pump and BECSYS7 chemical controller*** are designated by brand or trade name ***in order to match other products in use on a particular public improvement either completed or in the course of completion.***

A listing of materials is not intended to be comprehensive, or in order of preference. The Contractor may submit any material or product it considers to be an equivalent to that specified.

Submission of proposed equivalent materials and products shall be made in conformance with the requirements in the Instructions to Bidders.

The Contractor shall have the material tested as required by the Engineer to determine if the quality, strength, physical, chemical, or other characteristics, including durability, finish, efficiency, dimensions, service, and suitability are such that the proposed "equal" will fulfill the intended function. Test methods shall be subject to the approval of the Engineer. Test results shall be reported promptly to the Engineer, who will evaluate the results.

If the proposed equivalent product or material is determined by the Agency to not be equivalent to the specified product or material, the Contractor shall furnish and install the specified product or material.

Agency-approved equivalent products or materials shall not be installed nor put into usage without the prior approval of the Engineer.

The Contract Time of Completion specified in 6-3 shall not be affected by any circumstance arising from the provisions of this subsection.

SECTION 5 - LEGAL RELATIONS AND RESPONSIBILITIES

5-3 LABOR.

5-3.1 General.

Add the following:

This Project is subject to compliance monitoring and enforcement by the State of California Department of Industrial Relations.

5-3.2 Prevailing Wages.

Add the following after the second sentence:

The Agency will furnish copies of said wage rates for the Contractor's use.

Add the following:

The General Prevailing Wage Rate Determinations are available at www.dir.ca.gov/DLSR/PWD/index.htm. Copies of the General Prevailing Wage Determinations are on file at the City of Santa Clarita City Hall, 23920 Valencia Blvd. Suite 300, Santa Clarita, CA 91355. Copies will be made available to any interested party upon request. Future effective wage rates will be on file with the Department of Industrial Relations, and are referenced but not printed in said publication. The new wage rates shall become effective on the day following the expiration date of the current determinations and apply to the Contract in the same manner as if they had been included or referenced in the Contract.

Add the following subsection:

5-3.6 Work Records.

Pursuant to Section 1812 of the California Labor Code, the Contractor shall maintain an accurate written record of all employees working on the Project each calendar day. The record shall include each employee's name, Social Security number, job classification and the actual number of hours worked. The Contractor shall submit a signed copy of this record to the Engineer at the end of each week.

5-4 INSURANCE.

5-4.1 General.

Add the following:

The contractor is directed to and shall comply with all insurance requirements outlined in the Construction Agreement included herein.

5-4.2 General Liability Insurance.

Add the following as the second sentence of the first paragraph:

The policy shall also insure each owner of property upon which the Work is to be performed or which the Contractor acquires for its use.

Add the following after the second paragraph:

A Certificate of Insurance evidencing the required policy shall be submitted to the AGENCY concurrently with the filing of the Faithful Performance Bond and Payment (Labor and Material) Bond and shall be subject to the approval of the CITY ATTORNEY. The Contractor shall furnish to the AGENCY an endorsement showing the required insurance coverages for the Contractor are in place, and further providing that the following are named as an additional insured:

- The Agency, its officers, directors, and employees

5-4.3 Workers' Compensation Insurance.

Add the following:

Should evidence of the renewal or replacement of the policy not be filed with the Agency prior to the expiration or cancellation date, the Agency will stop all work on the Project and no further work shall be performed until new insurance coverage has been obtained by the Contractor. Such stop order shall not be a cause for a time extension to the Contract Time.

Such policy shall be endorsed to waive subrogation against the Agency for injury to the Contractor's employees. If the Contractor's employees will be engaged in maritime employment, the coverage shall provide the benefits required by the U.S. Longshore and Harbor Workers Compensation Act, Jones Act or any other Federal law to which the Contractor is subject. If the Contractor will provide leased employees, coverage shall also include an Alternate Employer Endorsement (providing scope of coverage equivalent to ISO policy form WC 00 03 01 A) naming the Agency as the Alternate Employer and the endorsement form shall be modified to provide that the Agency will receive not less than 30 Days advance written notice of cancellation of this coverage provision.

In all cases, the above insurance shall include employer's liability coverage with limits not less than:

Each Accident:	$1,000,000

5-4.4 Auto Liability Insurance.

Replace the entire paragraph with the following:

The Contractor shall provide evidence of and maintain automobile liability insurance. Such insurance shall be written on ISO policy form CA 00 01 or its equivalent with a limit of liability of not less than $1,000,000 for bodily injury and property damage, in combined or equivalent split limits, for each single accident. Such insurance shall cover liability arising out of the Contractor's use of autos in performing the Work, including owned, leased, hired, and/or non-owned autos, as each may be applicable.

5-7 SAFETY.

5-7.1 Work Site Safety.

5-7.1.1 General.

Add the following:

The Contractor shall be solely responsible for ensuring that all work performed under the Contract is performed in strict compliance with all applicable Federal, State and local occupational safety regulations. The Contractor shall provide at its expense all safeguards, safety devices and protective equipment, and shall take any and all actions appropriate to providing a safe Project site.

5-7.1.2 Work Site Safety Official.

Add the following:

Failure by the Contractor to provide the required Project Safety Official shall be grounds for the Agency to direct the cessation of all work activities and operations at no cost to the Agency until such time as the Contractor is in compliance.

Add the following subsection(s):

5-7.1.3 Safety Indemnification.

To the extent allowed by law, the Contractor agrees to defend, indemnify and hold harmless the Agency and its officers, employees and agents from and against any and all investigations, complaints, citations, liability, expense (including defense costs and legal fees), claims and/or causes of action for damages of any nature whatsoever, including but not limited to injury or death to employees of the Contractor, its SUBCONTRACTORS or Agency, attributable to any alleged act or omission of the Contractor or its SUBCONTRACTORS which is in violation of any Cal/OSHA regulation. The obligation to defend, indemnify and hold harmless includes all investigations and proceedings associated with purported violations of Section 336.10 of Title 8 of the California Code of Regulations pertaining to multi-employer work sites. The Agency may deduct from any payment otherwise due the Contractor any costs incurred or anticipated to be incurred by the Agency, including legal fees and staff costs, associated with any investigation or enforcement proceeding brought by Cal/OSHA arising out of the Project.

Add the following subsections:

5-7.9 Temporary Manhole Shaft Covers.

The Contractor shall protect the public at all times from accidental entry into manhole or manhole shaft openings. Any such opening shall be covered with an entry proof cover approved by the Engineer.

Payment for temporary manhole shaft covers shall be considered as included in the Contract Unit Price for the Bid items for or affecting manholes.

5-7.10 Temporary Asphalt Concrete.

Temporary asphalt concrete shall conform to 306-13.1.

Temporary asphalt concrete pavement shall be placed wherever curb ramps and sidewalk have been removed to provide continuous pedestrian access and at locations directed by the Engineer. Placement shall be such that, after compaction, the surface is flush with the edge of the adjoining existing surface.

Temporary asphalt concrete pavement shall be maintained after placement. Loose or raveled material shall be swept and removed from the Work site. Depressions shall be filled or reconstructed as necessary to restore the surface and provide a flush join to the existing adjacent surface.

The provisions of 306-14.8 and 306-15.9 shall not apply. No separate or additional payment will be made for temporary asphalt concrete. Payment shall be considered as included in the Contract Unit Price for the removal of the existing improvement which requires temporary asphalt concrete.

5-7.11 Protection of the Public.

It is part of the service required of the Contractor to make whatever provisions are necessary to protect the public. The Contractor shall use foresight and shall take such steps and precautions as his operations warrant to protect the public from danger, loss of life, or loss of property which would result from interruption or contamination of public water supply, interruption of other public service, or from the failure of partly completed work or partially removed facilities. Unusual conditions may arise on the work which will require that immediate and unusual provisions be made to protect the public from danger or loss, or damage to life and property, due directly or indirectly to prosecution of work under this contract.

Whenever, in the opinion of the Engineer, an emergency exists against which the Contractor has not taken sufficient precaution for the public safety, protection of utilities and protection of adjacent structures or property, which may be damaged by the Contractor 's operations and when, in the opinion of the Engineer, immediate action shall be considered necessary in order to protect the public or property due to the Contractor 's operations under this contract, the Engineer will order the Contractor to provide a remedy for the unsafe condition. If the Contractor fails to act on the situation within a reasonable time period, the Engineer may provide suitable protection to said interests by causing such work to be done and material to be furnished as, in the opinion of the Engineer, may seem reasonable and necessary.

The cost and expense of said labor and material, together with the cost and expense of such repairs as are deemed necessary shall be borne by the Contractor. All expenses incurred by the Agency for emergency repairs will be deducted from the final payment due to the Contractor. However, if the Agency does not take such remedial measures, the Contractor is not relieved of the full responsibility for public safety.

5-7.12 Notification to the Public.

The Contractor shall notify the occupants of properties affected by the work.
Notification shall be by delivery of handbills furnished by the Contractor and approved by the Agency.
The Contractor is responsible for adding the dates and hours of the work to be performed as well as general information regarding scope of work. Handbills shall be distributed at least 48, but no more than 72 hours in advance. In no event shall handbills be placed in or on any portion of the owner's mailbox.

Affected properties will be determined by the Engineer and are, in general, affected residents and those properties that fall within 500 feet of the limits of the work.

The Contractor shall notify the City by email that the handbills have been distributed. The email shall be addressed to the City representative(s) designated during the pre-construction conference. The email shall be sent to the City no later than 8 AM on the day following distribution of the notices. The email notification to the City shall contain a map showing the limits of distribution and the dates and times distributed. A separate email shall be sent for each distribution. The City will use the information on the emails to verify that the distribution has been performed. If the distribution is not verified by the City, the City will email to the Contractor's representative the locations which must be redistributed with new information. The Contractor shall not perform work in the distribution area without email notification of verification by the City of the distribution.

SECTION 6 - PROSECUTION AND PROGRESS OF THE WORK

6-1 CONSTRUCTION SCHEDULE AND COMMENCEMENT OF THE WORK.

Replace the entire subsection with the following:

6-1.1 Construction Schedule.

6-1.1.1 Terms and Definitions.

The following terms and their respective definitions are in addition to those specified in 1-2:

As-Built Schedule – The final updated Construction Schedule that reflects actual construction progress throughout the entire duration of the Project.

Baseline Schedule – The original Construction Schedule used as the basis for measuring construction progress and Contract performance.

Constraint – A requirement that restricts or dictates the Construction Schedule.

Construction Schedule – The schedule of construction activities that reflects the means and methods, planned sequencing, duration, and Milestone dates for the completion and acceptance of the Work. Types include the Baseline Schedule, Weekly Schedule Update, Monthly Schedule Update, and the As-Built Schedule.

Critical Path – The sequence of activities shown on the Construction Schedule which adds up to the longest overall duration.

Data Date – The latest date through which the activities shown on the Construction Schedule have been updated.

Milestone – A schedule activity that has zero duration and which graphically represents the start or finish of a portion of the Work.

Monthly Schedule Update – An updated Construction Schedule submitted every month that compares actual construction progress versus the progress planned on the Baseline Schedule.

Project Float – The difference between the Scheduled Completion Date and Required Completion Date. Float shall be an expiring resource available to both the Contractor and the Agency. Float shall not be for the exclusive use or benefit of either the Agency or the Contractor.

Required Completion Date – The required date for completion of the Work ~~as~~ based upon the number of Working Days specified in 6-3.1 and as amended by approved Change Orders.

Scheduled Completion Date – The planned date for completion of the Work as shown on the Construction Schedule.

Total Float – The maximum amount of time an activity can be delayed from its early start without delaying the completion of the Work. Float shall be an expiring resource available to

both the Contractor and the Agency. Float shall not be for the exclusive use or benefit of either the Agency or the Contractor.

Weekly Schedule Update – An updated Construction Schedule submitted every week that reflects the status of construction activities from the past week and also includes construction activities scheduled in detail for the following 2 weeks.

6-1.1.2 General.

Construction schedules shall conform to the following requirements:

a) The Construction Schedule shall be prepared using Microsoft Project.

b) The Construction Schedule shall be prepared using the Critical Path Method (CPM) illustrating the chronological relationship and sequence of work activities. Activities on the Critical Path shall be clearly delineated.

c) Work activities shall be based on the Bid items listed in the Bid Schedule and the following:

   1) Bid Items shall be subdivided into those portions to be constructed during each stage or phase of construction, or portions which do not exceed 20 Working Days, whichever is less.

   2) Each submittal, and the corresponding Agency review period, shall be shown as an individual activity.

   3) The procurement of construction materials and equipment shall be identified and shown as individual activities.

   4) Part 1 NTP requirements shall be shown as individual activities.

d) The Construction Schedule shall commence on the Part 1 NTP Issuance Date and end on the Required Completion Date milestone, or Scheduled Completion Date milestone, required date of the first Working Day whichever date is later.

e) Change Orders, including number, description, approval date, and duration shall be shown as individual activities.

f) Each activity must have at least one predecessor and one successor with the exception of the Project start and finish milestones.

g) Schedule options within the program file shall be as follows:

   1) Use retained logic when scheduling progressed activities.

   2) Define critical activities as Longest Path.

   3) Compute Total Float as the difference between late finish and early finish.

   4) Use predecessor activity calendar for scheduling relationship lag.

   5) Use of “Must Finish By” date in the project settings shall not be used.

h) Calendars, codes, and other information shall be on a project-level basis within the schedule software, as opposed to global, so that any changes to subsequent schedules are independent of past schedule submittals.

i) A level-of-effort type activity shall be included named "Project Float", with the Scheduled Completion Date milestone as a predecessor and the Required Completion Date milestone as a successor.

j) Date and time constraints and lags, other than those specified in this subsection, are not allowed unless otherwise accepted by the Engineer. The use of negative lags is not allowed.

k) Notification activities shall be milestones linked as predecessors to the related work. These milestones shall contain "As Late As Possible" constraints with lags equal to the notice duration specified.

l) The schedule shall reflect the following Constraints:

1) Utility relocations per 402-4.

2) Schedule impacts due to the protection, removal, or relocation of utilities per 402-5.

3) The Sequence of Work per 6-2.3.

4) Temporary traffic control requirements per CA MUTCD and the Special Provisions.

5) The Time of Completion per 6-3. A Baseline Schedule submitted showing completion earlier or later than the time of completion specified will not be accepted.

m) The schedule shall include the following Milestones:

Activity ID	Activity Name	Constraint Type
NTP1	Part 1 NTP Issuance Date	Start On
NTP2	Part 2 NTP Issuance Date	Start On
REQS	Required Start Date	Start On
REQC	Required Completion Date	Finish On
COMP	Scheduled Completion Date	Finish On or Before

n) The Controller shall use the project-specific activity codes loaded in the Project Template provided by the Agency including, but not limited to, the following:

1) Work Type (TYPE):

Code Value	Description
ADM	Administrative activities such as contract Milestones, meetings, permits, etc.
SUB	Submittals by the Contractor

REV	Submittal Reviews by the Agency
PRO	Procurement of Materials or Equipment
NOT	Notification Activities
CON	Construction Activities
UFE	Unforeseen Events
OTH	Other Activities

2) Responsibility (RESP):

Code Value	Description
PRI	Prime Contractor Activities
SUB	SUBCONTRACTOR Activities
AGE	Agency Activities
UTI	Utility Company Activities
OTH	Other Entity Activities

3) Item No. (ITEM) - Each activity shall be identified using an activity code with its corresponding Bid item number(s) or Change Order item number(s) listed in the monthly Progress Payment.

6-1.1.3 Submittals.

a) General.

Construction Schedule submittals shall include a portable document file (pdf) accessible using the latest version of Microsoft Project. The submittal shall be emailed to the Engineer.

b) Baseline Schedule.

Within 10 Days of issuance of the Part 1 NTP, The Contractor shall submit a Baseline Schedule for review and acceptance by the Engineer.

c) Weekly Schedule Updates.

The Contractor shall submit Weekly Schedule Updates which will be used to manage, coordinate, and schedule all upcoming Contract activities. These detailed schedules may be submitted in bar chart format and shall reflect the logic and sequence used for the accepted Baseline Schedule. The Weekly Schedule Update shall include the following:

1) Status of the construction activities of the past week, scheduled vs. actual.

2) An explanation for deviations from planned activities, together with actions taken or planned to recover lost time, if applicable.

3) Two-week "look-ahead" Schedule detailing all work activities planned for the next 2 weeks, including all work to be performed by others. Activities included in the Baseline Schedule shall be further broken down into detailed activities, by specific task, by specific area, at the crew level or lower.

d) Monthly Schedule Updates.

On the first Working Day of each month the Contractor shall submit a Monthly Schedule Update using the same software used to prepare the Baseline Schedule. The Engineer will not submit the monthly Progress Payment specified in 7-3.2 for processing until the Monthly Schedule Update has been submitted. The schedule may be emailed to the Engineer with 2 printed color copies on 11-inch x 17-inch sheets. Should the update not reflect the actual progress of the Work, the update will be returned to the Contractor for inclusion of the changes on the next update. Updates shall conform to 6-1.1.2 and the following:

1) Actual start and completion dates versus the original accepted Baseline Schedule shall be illustrated.

2) Deviations in the progress and sequence of the Work shall be identified and supported by a detailed narrative justification. The updates shall include necessary remedies and revisions to recover delays to the schedule to meet the original Contract milestones.

3) The data date shall be the 28th day of the previous month.

4) Change Order work scheduled after the Data Date that includes an approved time extension shall be shown as a Critical Path activity. Change Order work scheduled after the Data Date without an approved time extension shall be shown as a non-Critical Path activity. Change Order work performed prior to the Data Date shall be shown as an as-built activity.

5) The Required Completion Date milestone constraint date shall be adjusted to account for time extensions approved as of the Data Date.

6) The Scheduled Completion Date milestone constraint date shall be adjusted to match the Required Completion Date as of the Data Date.

e) As-Built Schedule.

Within 10 Days after completion of the Work per 3-13.1, the Contractor shall prepare and submit an As-Built Construction Schedule using the same software used to prepare the Baseline Schedule. The Engineer will not submit the final monthly progress payment for processing until the schedule has been submitted. The schedule may be emailed to the Engineer or submitted on a thumb drive with 2 printed color copies on 11-inch x 17-inch sheets.

The As-Built Schedule shall reflect the actual progress of the Work from the date of issuance of the Part 1 NTP through the date of completion. Should the As-Built Schedule not reflect the actual start and finish dates of all work activities, the schedule will be returned to the Contractor for revision and re-submittal.

a) Upon submittal of a TIA by the Contractor, an analysis of the facts will be performed by the Engineer to determine compensability and entitlement to any time extension under the applicable contract clauses.

b) Acceptance of a TIA is at the sole discretion of the Engineer.
c) The Engineer will construct its own TIA or utilize another method to determine adjustments in the Contract time of completion if the Contractor fails to submit a TIA.

6-1.1.5 Payment.

Payment for preparation of the Baseline Schedule, Monthly Schedule Update, and As-built Schedule shall be considered as included in the lump sum Bid price for "MOBILIZATION/ DEMOBILIZATION".

No separate or additional payment will be made for preparation of each Weekly Schedule Update or Time Impact Analysis.

Failure of the CONTRACTOR to adhere to the approved construction schedule will result in damages being sustained by the CITY. For each occurrence of a construction schedule violation as provided herein, the CONTRACTOR shall pay to the CITY, or have withheld from monies due to it, the sum of $ 500 per day that the violation is not corrected to the satisfaction of the City, unless otherwise provided in the specifications.

6-1.2 Commencement of the Work.

6-1.2.1 General. – *Add this subsection:*

The Notice to Proceed (NTP) for this Contract will be issued in 2 separate parts. The Agency will issue the Part 1 NTP after the Contractor satisfactorily submits all of the documentation required in the Instructions to Bidders and the Agency has executed the Contract.

The Part 1 NTP shall be for the Contractor to perform the following:

a) Submit all required preconstruction submittals per 3-8.7 and receive Agency approval for such submittals unless otherwise specified.
b) Ensure that all labor, equipment, and materials required for the Contract will be available when required by the Construction Schedule per 6-1.1.
c) Mobilization.
d) Attend preconstruction meetings with the Agency.
e) Apply for and obtain all permits ***and insurance*** required per 2-2.
f) Submit Baseline Construction Schedule per 6-1.1 and receive Agency approval.

The Contractor shall complete all of the above stated-activities within **135** Working Days of the Part 1 NTP. Each additional Working Day in which the Contractor is not in compliance with this requirement will be subtracted from the number of Working Days allowed for the Time of Completion per 6-3. When the number of Working Days specified in 6-3.1 is exhausted, the Contractor will be subject to liquidated damages. The counting of Working Days for the completion of Part 1 NTP activities will stop upon the receipt of all required Submittals and resume upon the return of any required submittal to the Contractor per 3-8.

The Part 2 NTP shall be for the start of the Work. The Part 2 NTP will not be issued until all Part 1 NTP activities have been completed.

Payment for compliance with Part 1 and Part 2 NTP requirements, including preparation of the Baseline Construction Schedule, shall be considered as included in the lump sum Bid price for "MOBILIZATION/ DEMOBILIZATION".

6-1.2.2 Pre-Construction Meeting- *Add this subsection:*

The Agency will conduct a Pre-Construction Meeting at ***the City Hall, 23920 Valencia Boulevard, Santa Clarita, CA 91355***, prior to the start of the Work. The Engineer will distribute a notice of this meeting, along with an agenda of the subjects to be addressed at least **4 Days** prior to the meeting. The Contractor's Representative shall be present at the meeting.

The following is a typical agenda:

1) The ENGINEER will explain and discuss insurance, laws and codes, maintenance of traffic, permits, quality control, inspection and related items.
2) The ENGINEER will discuss procedures for Submittals, and Change Orders.
3) The ENGINEER will discuss monthly progress payment application and establish the estimate cutoff date and discuss partial and final payments.
4) The ENGINEER will discuss Water Control Compliance requirements (BMPs and/or SWPPP).
5) The ENGINEER will discuss Labor Compliance requirements.
6) The ENGINEER will discuss the City's Construction & Demolition Materials Management Plan.
7) The ENGINEER will discuss the Notice to Proceed and the CONTRACTOR's responsibility to obtain permit(s) from the City and other entities, if required, prior to beginning work.
8) The CONTRACTOR will introduce the CONTRACTOR's representatives, briefly describe each person's responsibilities, and provide emergency contact information.
9) The CONTRACTOR will distribute a list of all SUBCONTRACTORS and suppliers and discuss sequence of and coordination of critical work and long lead procurement items.
10) The CONTRACTOR will define and discuss arrangements for safety, first aid, emergency actions and security.

Those attending the meeting shall include, but not be limited to the following:

a) The Contractor's Representative.

b) A representative of each listed SUBCONTRACTOR.

c) A finance representative or certified payroll designee from the Contractor and each SUBCONTRACTOR for labor compliance requirements.

d) City Staff.

e) Design ENGINEER.

f) Affected utility company representatives.

Any explanations provided by the Engineer at this meeting do not amend, supersede or alter terms or meaning of any Contract Document and the CONTRACTOR shall not claim reliance on such explanations as a defense to any breach or failure by the CONTRACTOR to perform as specified in the Contract.

6-2 PROSECUTION OF THE WORK.

Add the following before the first paragraph:

6-2.1 General.

Add the following after the last paragraph:

The CONTRACTOR's activities shall be confined to the hours between ***7:00 AM and 4:30 PM,*** Monday through Friday. In addition, no work shall be performed on Saturday, Sunday, or on the following AGENCY-designated holidays unless otherwise shown on the approved project plans or approved by the Engineer.

Days designated as holidays by the CITY are listed in Table 1 below.

TABLE 1-CITY-DESIGNATED HOLIDAYS (based on 2026 – 2027 construction)

HOLIDAY	2026	2027
Labor Day	Sept 7	
Columbus Day	Oct 12	
Veteran’s Day	Nov 11	
Thanksgiving Day	Nov 26	
Day after Thanksgiving	Nov 27	
Christmas Eve	Dec 24	
Christmas Day	Dec 25	
New Year’s Eve	Dec 31	
New Year’s Day		Jan 1
Martin Luther King Day		Jan 18
President’s Day		Feb 15

Deviations from these restrictions will not be permitted without the prior consent of the ENGINEER, except in emergencies involving immediate hazard to persons or property. In the event of either a requested or emergency deviation, inspection service fees will be charged against the CONTRACTOR. Service fees will be calculated at overtime rates including benefits, overhead, and travel time; and will be deducted from the amounts due the CONTRACTOR.

Failure of the CONTRACTOR to adhere to these restrictions will result in damages being sustained by the CITY. Such damages are, and will continue to be, impracticable and extremely difficult to determine. For each occurrence of a working day or hours violation, as provided herein, the CONTRACTOR shall pay to the CITY, or have withheld from monies due to it, the sum of **$1,000**, unless otherwise provided in the specifications.

Add the following subsections:

6-2.2 Work by Others Due to Unsatisfactory Work Prosecution.

If, as determined by the Engineer, the Contractor is not prosecuting the Work in a satisfactory manner or is not providing for public safety, traffic and protection of the Work, the Engineer will notify the Contractor of such unsatisfactory conditions and will indicate the date and time when corrective work must be completed. If the Contractor fails to comply, the Agency may elect to do the Work or have the Work performed by others and deduct the cost thereof from any monies due the Contractor. Such action shall not relieve the Contractor from liability.

6-3 TIME OF COMPLETION.

6-3.1 General.

Replace the first sentence with the following:

Time is of the essence in the performance of the Work. The Contractor shall complete the Work for Part 2 Notice to Proceed within **135** Working Days.

6-4 DELAYS AND EXTENSIONS OF TIME.

6-4.1 General.

Replace the second paragraph with the following:

No extension of time will be granted for a delay caused by the inability to obtain materials unless the Contractor obtains from the supplier and furnishes to the Engineer documentary proof that such materials could not be obtained due to war, government regulations, labor disputes, strikes, fires, floods, adverse weather necessitating the cessation of work, or other similar action of the elements.

6-5 USE OF IMPROVEMENT DURING CONSTRUCTION.

Add the following after the first paragraph:

Action by the Agency to take over and utilize any part of the Project shall become effective only upon issuance of a written notice, signed by the Engineer, setting forth a description of the completed improvements to be taken over, the effective date, location and limits thereof.

6-9 LIQUIDATED DAMAGES.

Replace the third sentence of the first paragraph with the following:

For each Day in excess of the time specified for the completion of the Work in 6-3.1, as adjusted in accordance with 6-4, the Contractor shall pay to the Agency, or have withheld from monies due it, the sum of ***$1,000.00***.

Replace the first sentence of the second paragraph with the following:

Execution of the Contract shall constitute agreement by the Agency and the Contractor that ***$1,000.00*** per Day is the minimum value of the costs and actual damage caused by the failure of the Contractor to complete the Work within the allotted time.

Add the following subsection:

6-10 CONSTRUCTION PROGRESS MEETINGS.

Progress meetings will be scheduled between the ENGINEER and the CONTRACTOR.

Meetings will be scheduled weekly and more often as necessary for the competent and timely execution of the Work under the Contract. These meetings will be chaired by the ENGINEER.

The CONTRACTOR shall supply, as requested by the ENGINEER, an updated construction schedule for work to be performed in the next 2 weeks.

SECTION 7 - PAYMENT

7-2 LUMP SUM WORK.

Replace the first sentence of the second paragraph with the following:

The Contractor shall submit, per 3-8 and 6-1.2, a detailed schedule to be used only as a basis for determining progress payments for lump sum Bid Items.

7-3 PAYMENT.

7-3.1 General.

Add the following:

No payment will be made for work which is not in conformance with the requirements of the Contract Documents nor for work performed outside the limits of the Work as shown on the Plans or otherwise approved by the Engineer.

7-3.2 Partial and Final Payment.

Add the following:

The closure date for the purpose of making partial progress payments will be the last day of each month. Prior to the end of each month and preparation of the progress payment estimate, the CONTRACTOR shall meet with the ENGINEER to review and discuss the quantity of each unit price Bid item and percentage of each lump sum Bid item completed to the closure date. The Engineer will furnish the Contractor with a statement of the approximate measurement of the Work performed to the closure date. The Contractor shall submit an invoice identical in itemization, quantity, and cost to that shown on the statement. The monthly progress payment will not be submitted for processing until an invoice has been received.

When the Work is complete in accordance with 3-13.1, the ENGINEER will determine the final quantities of each unit price Bid item and prepare the final progress payment report.

Payments are authorized and made within 45 Days after date of receipt of an invoice However, payments will be withheld pending receipt of any outstanding submittals, reports, or other documentation required by the Contract Documents. In addition, the final progress payment will not be released until the CONTRACTOR conforms to the requirements of 3-16.

Retention amount will be retained from all progress amounts due. The retained amounts will be authorized for final payment 60 Days after the date of recordation of the Notice of Completion.

The CONTRACTOR, however, may receive interest on the retained amount or receive the retained amount itself so long as securities equivalent to the retained amounts are substituted with an escrow holder approved by the AGENCY.

At the request and expense of the CONTRACTOR, retained amounts or securities equivalent to the retained amounts may be deposited with the State Treasurer or a state or federally chartered bank as the escrow agent, who shall return such monies or securities to the CONTRACTOR upon acceptance of the Contract.

Securities eligible for investment shall include those listed in Section 16430 of the State Government Code, bank or savings and loan certificates of deposit, interest bearing demand deposit accounts and stand-by letters of credit.

Any escrow agreement entered into shall contain the following provisions and be substantially similar to the form "Escrow Agreement for Security Deposits in Lieu of Retention as contained in Section 4590 of Chapter 13 of Division 5 of Title 1 of the Government Code."

7-3.3 Delivered Materials.

Subsection 7-3.3 is hereby deleted and replaced with the following:

Materials and equipment delivered, but not incorporated into the work, will not be included in the estimate for progress partial payment unless authorized by the City Engineer. The CITY will not pay for storage costs.

The Contractor shall be solely responsible for theft, vandalism, damage, or any other event or circumstance affecting the quality or suitability of any delivered materials for incorporation into the Work, whether the delivered material has been approved for progress partial payment or not.

7-3.4 Mobilization/ Demobilization.

Replace the entire subsection with the following:

When a Bid item is included in the Bid for "MOBILIZATION/ DEMOBILIZATION", the costs of work in advance of construction operations and not directly attributable to any specific Bid item will be included in the progress estimate.

Mobilization/Demobilization shall be a lump sum price consisting of preparatory work, and operations, including, but not limited to, those necessary for the movement of personnel, equipment, supplies and incidentals to the Project site and for all other work and operations which must be performed or costs incurred prior to beginning work on the various Contract items on the Project site.

The scope shall also include all costs associated with required permit and fees, clean-up, removal of all USA and construction related markings, shop drawings, compliance with Part 1 and 2 NTP, preparation of project schedule, project phasing, supervision, coordination of concurrent work with other CONTRACTORs, meetings, and "as-built" plans required to perform the Work indicated in the plans and specifications**,** establishing construction water facilities as needed to complete the work.

The submission of all mix designs and material submittals for the project, embodying all corrections required by the Engineer, shall be completed under this item.

Payments for mobilization/ demobilization will be made as follows:

A. Fifty percent (50%) of the total amount bid for Mobilization/Demobilization will be paid with the first progress payment after at least five percent (5%) of the original Contract Amount for other items of work has been performed.

B. When at least ten percent (10%) of the original Contract Amount for other items of work has been performed, an amount will be included in the next monthly progress

payment to increase the total amount of Mobilization/ Demobilization will be paid to seventy-five percent (75%) of the total amount bid for Mobilization/ Demobilization.

C. When at least twenty percent (20%) of the original Contract Amount for other items of work has been performed, an amount will be included in the next monthly progress payment to increase the total amount of Mobilization/ Demobilization will be paid to ninety percent (90%) of the total amount bid for Mobilization/ Demobilization.

D. The final 10% payment shall be made when the contractor has demobilized as determined by the City Representative.

Mobilization/demobilization work which extends beyond the first progress payment, excepting the 10% withheld for demobilization, shall be considered a part of other bid items in the construction work. Any other costs of work in advance of construction operations and not directly attributable to any specific bid item shall be included in the bid item for Mobilization/ Demobilization. No additional money shall be paid therefore.

7-3.5 Contract Unit Prices.

7-3.5.1 General.

Add the following:

The AGENCY reserves the right to increase or decrease the amount of any or all of the approximate quantity shown in the Bid Schedule, and to add or delete the locations, type, and extent, of each Bid item. Increases or decreases in the quantities within the limits specified shall in no way invalidate the Contract Unit Price. No claim shall be made by the Contractor for any loss of anticipated profits because of any such alteration or due to any variation between the approximate quantities and the actual quantities of each Bid item.

7-4 PAYMENT FOR EXTRA WORK.

7-4.2 Basis for Establishing Costs.

7-4.2.1 Labor.

Replace the first paragraph with the following:

The cost of labor shall be the cost of wages (basic hourly rate) plus the cost of employer payments (health and welfare, pension, vacation/holiday, training, and other payments for assessments or benefits required by lawful collective bargaining agreements) as listed on the General Prevailing Wage Determination made by the Director of Industrial Relations in effect at the time the Extra Work is performed. ***To the total of these costs, a labor surcharge based on the current Caltrans labor surcharge rates (***www.dot.ca.gov/hq/construc/equipmnt.html) ***at the time the work is performed shall be applied for statutory payroll items stipulated by various governmental agencies***. The items included are worker's compensation insurance, Social Security, Medicare, Federal unemployment insurance, State unemployment insurance, and State training taxes.

7-4.2.3 Tool and Equipment Rental.

Replace the second paragraph with the following:

Regardless of ownership, the rates to be used in determining equipment rental costs shall not exceed those listed in the current edition of the "Labor Surcharge and Equipment Rental Rates" of the State of California Department of Transportation (Caltrans) (www.dot.ca.gov/hq/construc/equipmnt.html) at the time the work is performed. Standby rates shall be 50 percent of the hourly rate. Payment for standby shall not exceed 8 hours per day, 40 hours per week and 176 hours per month. If the equipment is not listed, the rate allowed shall be that calculated for a comparable item.

7-4.3 Markup.

7-4.3.1 Work by the Contractor.

Replace the entire paragraph with the following:

The following percentages shall be added to the Contractor's costs and shall constitute the markup for overhead and profit, and all other costs not specifically provided for on work performed by the Contractor:

Labor (excluding Labor Surcharge)	20%
Materials	15%
Equipment Rental	15%
Other Items and Expenditures	15%

To the sum of the costs and markups provided for in this subsection, 1 percent shall be added as compensation for bonding.

7-4.3.2 Work by SUBCONTRACTOR.

Replace the entire paragraph with the following:

When all or any part of the Extra Work is performed by a SUBCONTRACTOR, the markup established in 7-4.3.1 shall be applied to the SUBCONTRACTOR's actual cost of such work. A markup of 10 percent on the first $2,000 of the subcontracted portion of the Extra Work may be added by the Contractor. A markup of 5 percent may be added to the remaining subcontracted portion. This markup shall constitute the Contractor's markup for overhead and profit on work performed by the SUBCONTRACTOR.

Add the following:

7-4.3.3 General.

The markups specified in 7-4.3.1 and 7-4.3.2 above shall be considered as including, but not be limited to, the Contractor's labor costs for personnel not working directly on the Extra Work, including the cost of any tools and equipment which they may use. Such costs shall not be reported as labor or equipment costs elsewhere except when they are actually used in the performance of the Extra Work. Labor costs shall in that case be reported for the labor classification corresponding to the type and nature of Extra Work performed.

Add the following:

7-4.3.4 Allowance Items.

The following percentage shall be added to the Contractor's actual costs unless otherwise specified; 15 percent.

Add the following subsection:

7-6 FINAL PAY ITEMS.

When an item of work is designated as a Final Pay Item in the Bid Schedule, the estimated quantity for that item of work shall be the final pay quantity, unless the dimensions of any portion of that item are revised by the Engineer, or the item or any portion of the item is eliminated. If the dimensions of any portion of the item are revised, and the revisions result in an increase or decrease in the estimated quantity of that item of work, the final pay quantity for the item will be revised in the amount represented by the changes in the dimensions. If a final pay item is eliminated, the estimated quantity for the item will be eliminated. If a portion of a final pay item is eliminated, the final pay quantity will be revised in the amount represented by the eliminated portion of the item of work.

The estimated quantity for each item of work designated as a Final Pay Item shall be considered as approximate only, and no guarantee is made that the quantity which can be determined by computations, based on the details and dimensions shown on the Plans, will equal the estimated quantity. No allowance will be made in the event that the quantity based on computations does not equal the estimated quantity.

In the case of a discrepancy between the quantity shown in the Bid Schedule for a Final Pay Item and the quantity or summation of quantities for the same item shown on the Plans, payment will be based on the quantity shown in the Bid Schedule.

SECTION 9 – CONSTRUCTION CLAIMS

9-1 NOTICE OF POTENTIAL CLAIM.

The CONTRACTOR shall not be entitled to the payment of any additional compensation for any act, failure to act, by the ENGINEER, including failure or refusal to issue a Change Order, or for the happening of any event, thing, occurrence, or other cause, unless the CONTRACTOR has submitted to the ENGINEER a due written Notice of Potential Claim as hereinafter specified. The written Notice of Potential Claim shall set forth the reasons for which the CONTRACTOR believes additional compensation will or may be due, the nature of the costs involved, and, insofar as possible, the amount of the potential claim. The said notice as above required must have been given to the ENGINEER prior to the time that the CONTRACTOR shall have performed the work giving rise to the potential claim for additional compensation, if based on an act or failure to act by the ENGINEER, or in all other cases within 15 Days after the happening of the event, thing, occurrence, or other cause, giving rise to the potential claim.

It is the intention of this subsection that differences between the parties arising under and by virtue of the Contract be brought to the attention of the ENGINEER at the earliest possible time in order that such matters may be settled, if possible, or other appropriate action promptly taken. The CONTRACTOR hereby agrees that it shall have no right to additional compensation for any claim that may be based on any such act, failure to act, event, thing, or occurrence for which no written notice of potential claim as herein required was filed.

9-2 CLAIMS.

A. Claims.
This Article applies to any Claim arising from or related to the Contract or performance of the Work. "Claim" means a separate demand by the CONTRACTOR sent by registered mail or certified mail with return receipt requested, for one or more of the following:(A) a time extension, including, without limitation, for relief from damages or penalties for delay assessed by the OWNER under the Contract for this Project; (B) payment by the OWNER of money or damages arising from work done by, or on behalf of, the claimant pursuant to the Contract for this Project and payment for which is not otherwise expressly provided or to which the claimant is not otherwise entitled; and (C) payment of an amount that is disputed by the OWNER.

B. Form and Contents of Claim.
1. The CONTRACTOR's written claim must be submitted via registered mail or certified mail with return receipt requested and must identify itself as a "Claim" under this Section and must include the following: (i) a narrative of pertinent events; (ii) citation to contract provisions; (iii) theory of entitlement; (iv) complete pricing of all cost impacts; (v) a time impact analysis of all time delays that shows actual time impact on the critical path; (vi) documentation supporting items (i) through (v); and (vii) a verification under penalty of perjury of the Claim's accuracy. The Claim shall be submitted to the ENGINEER and the OWNER within thirty (30) calendar days of receiving the OWNER's written decision, or the date the CONTRACTOR contends such decision was due, and must be updated monthly as to cost and entitlement if a continuing Claim. Routine contract materials, for example, correspondence, requests for information, change order requests, or payment requests shall not constitute a Claim. The CONTRACTOR shall bear all costs incurred in the preparation and submission of a Claim.

2. Upon receipt of a Claim, the ENGINEER and the OWNER shall conduct a reasonable review of the Claim. Within 45 days, or such extended period as the OWNER and the CONTRACTOR may agree, the ENGINEER or the OWNER shall provide the CONTRACTOR with a written statement identifying what portion of the Claim is disputed and what portion is undisputed.

3. If the OWNER's governing body must approve the OWNER's response to the Claim and the governing body has not met within the 45-day (or extended) period, then the OWNER shall provide its written statement within three (3) days of the governing body's meeting.

4. The OWNER shall pay the undisputed portions of the Claim within 60 days of the issuance of a written statement identifying an undisputed portion.

5. Claims must be submitted on or before the day of final payment. Claims not submitted before final payment are deemed waived.

6. Notwithstanding and pending the resolution of any Claim or dispute, the CONTRACTOR shall diligently prosecute the disputed work to final completion in accordance with the ENGINEER's determination.

C. Informal Conference After Claim Submission.

1. If the CONTRACTOR disputes the OWNER's response to its Claim, including a failure to respond, it may submit via registered mail or certified mail, return receipt requested, a written demand for an informal conference to meet and confer for settlement of the issues in dispute. The OWNER shall schedule such a meet and confer conference within 30 days for settlement of the dispute.

2. Within ten (10) days of the meet and confer conference, the OWNER shall provide the CONTRACTOR with a written statement identifying the portion(s) of the Claim that remain in dispute and the portion(s) that are undisputed.

3. The OWNER shall pay the undisputed portions of the Claim within 60 days of the issuance of any written statement identifying an undisputed portion.

D. Mediation.

1. If the CONTRACTOR disputes the OWNER's statement provided under Paragraph C.2 above, it shall inform the OWNER and the parties shall mutually agree to a mediator within 10 business days of the date of the written statement. If the parties cannot agree upon a mediator, each party shall select a mediator and those mediators shall select a qualified neutral third party to mediate with regard to the disputed portion of the Claim. Each party shall bear the fees and costs charged by its respective mediator in connection with the selection of the neutral mediator.

2. Mediation shall be confidential and non-binding. Unless otherwise agreed by the parties or as provided in this Paragraph D.2, the mediation shall be pursuant to the construction mediation procedures of JAMS (or other mutually agreed upon dispute organization) and held at the JAMS office closest to the Project site.

3. The cost of mediation shall be equally shared by all parties to the mediation. The parties shall, prior to the commencement of mediation and upon notice to the other party, exchange relevant, non-privileged Project documents in compliance with Code of Civil Procedure Sections 2031.010, et seq. The parties may agree mutually to engage in additional discovery prior to mediation. Should the parties proceed with additional discovery, they shall, unless mutually agreed otherwise, comply with Code of Civil Procedure Sections 2019, et seq. The mediator will undertake to resolve any discovery disputes relating to the mediation.

4. For Claims under $375,000, unless the parties agree otherwise in writing, mediation pursuant to this Paragraph 132.4 shall excuse the mediation obligation under Public Contract Code Section 20104.4(a), as provided in Paragraph E.6.a, below.

5. If mediation is unsuccessful, the parts of the Claim remaining in dispute shall be resolved as otherwise provided by the Contract and applicable law.

6. Following receipt of a Claim, the parties may mutually agree, in writing, to waive the mediation requirements of this Paragraph D.6 and proceed to the commencement of a civil action.

7. All statutes of limitation shall be tolled from the date of the demand for mediation until a date two weeks following the mediation's conclusion.

E. Dispute Procedures for Claims Under $375,000 (PCC §§ 20104, et seq.)

1. Public Contract Code Section 20104, et seq., specifies required provisions on resolving contract claims less than $375,000, which are set forth below, and constitute a part of this Contract.

2. For the purposes of this section, "Claim" means a separate demand by the CONTRACTOR of $375,000 or less for (1) a time extension, (2) payment or money or damages arising from Work done by or on behalf of the CONTRACTOR arising under the Contract Documents and payment of which is not otherwise expressly provided for or the Claimant is not otherwise entitled to, or (3) an amount the payment of which is disputed by the OWNER. In order to qualify as a Claim, the written demand must state that it is a Claim submitted under Section 9-2 of these General Provisions and be submitted in compliance with all requirements of Section 9-2 of these General Conditions. Separate CONTRACTOR Claims that together total more than $375,000 do not qualify as a "separate demand of $375,000 or less," as referenced above, and are not subject to this section.

3. A voucher, invoice, payment application, or other routine or authorized form of request for payment is not a Claim for purposes of this section. If such request is disputed as to liability or amount, then the disputed portion of the submission may be converted to a Claim under this section by submitting a separate claim in compliance with Contract Documents claim submission requirements.

4. Caution. This section does not apply to tort claims, and nothing in this section is intended nor shall be construed to change the time periods for filing tort claims or actions specified by Chapter 1 and Chapter 2 of Part 3 of Division 3.6 of Title 1 of the Government Code.

5. Procedure.

a. The Claim must be in writing, submitted in compliance with all requirements of these General Provisions, Section 9-2 including, without limitation, the time prescribed by and including the documents necessary to substantiate the Claim, pursuant to Paragraph B.1 of this Section 9-2. Claims must be filed on or before the day of final payment. Nothing in this section is intended to extend the time limit or supersede notice requirements for the filing of claims as set forth in these General Provisions, Section 9-2 or elsewhere in the Contract Documents.

b. For Claims of fifty thousand dollars ($50,000) or less, OWNER shall respond in writing within forty-five (45) days of receipt of the Claim, or OWNER may request in writing within thirty (30) days of receipt of the Claim, any additional documentation supporting the Claim or relating to any defenses or claims OWNER may have against Claimant. If additional information is thereafter required, it shall be requested and provided in accordance with this section upon mutual agreement of OWNER and Claimant. OWNER's written response to the Claim, as further documented, shall be submitted to Claimant within fifteen (15) days after receipt of further documentation or within a period of time no greater than taken by Claimant in producing the additional information, whichever is greater.

c. For Claims over Fifty Thousand Dollars ($50,000) and less than or equal to $375,000: OWNER shall respond in writing within sixty (60) days of receipt of the Claim, or OWNER may request in writing within thirty (30) days of receipt of the Claim, any additional documentation supporting the Claim or relating to any defenses or claims OWNER may have against Claimant. If additional information is thereafter required, it shall be requested and provided in accordance with this section, upon mutual agreement of OWNER and Claimant; OWNER's written response to the Claim, as further documented, shall be submitted to Claimant within thirty (30) days after receipt of further documentation or within a period of time no greater than taken by Claimant in producing the additional information, whichever is greater.

d. Meet and Confer: If Claimant disputes OWNER's written response, or OWNER fails to respond within the time prescribed above, Claimant shall notify OWNER, in writing, either within fifteen (15) days of receipt of OWNER's response or within fifteen (15) days of OWNER's failure to timely respond, and demand an informal conference to meet and confer for settlement of the issues in dispute. Upon demand OWNER will schedule a meet and confer conference within thirty (30) days for settlement of the dispute.

e. Following the meet and confer conference, if the Claim or any portion remains in dispute, Claimant may file a claim as provided under the Contract Documents and applicable law.

6. The following procedures are established for all civil actions filed to resolve claims subject to Public Contract Code §§ 20104, et seq.:

a. Within 60 Days, but no earlier than 30 Days, following the filing or responsive pleadings, the court will submit the matter to non-binding mediation unless waived by mutual stipulation of both parties. The mediation process shall provide for the selection within 15 Days by both parties of a disinterested third person as mediator, shall be commenced within 30 Days of the submittal, and shall be concluded within 15 Days from the commencement of the mediation unless a time requirement is extended upon a good cause showing to the court or by stipulation of both parties. If the parties fail to select a mediator within the 15-Day period, any party may

petition the court to appoint the mediator.

b. If the matter remains in dispute, the case shall be submitted to judicial arbitration pursuant to Chapter 2.5 (commencing with Section 1141.10) of Title 3 of Part 3 of the Code of Civil Procedure, notwithstanding Section 1141.11 of that code. The Civil Discovery Act of 1986 (Article 3 (commencing with Section 2016) of Chapter 3 of Title 3 of Part 4 of the Code of Civil Procedure) shall apply to any proceeding brought under this Subsection consistent with the rules pertaining to judicial arbitration.

c. Notwithstanding any other provision of law, upon stipulation of the parties, arbitrators appointed for purposes of this Section shall be experienced in construction law, and upon stipulation of the parties, mediators and arbitrators shall be paid necessary and reasonable hourly rates of pay not to exceed their customary rate, and such fees and expenses shall be paid equally by the parties, except in the case of arbitration where the arbitrator, for good cause, determines a different division. In no event shall these fees or expenses be paid by state or county funds.

d. In addition to Chapter 2.5 (commencing with Section 1141.10) of Title 3 of Part 3 of the Code of Civil Procedure, any party who after receiving an arbitration award requests a trial de novo but does not obtain a more favorable judgment shall, in addition to payment of costs and fees under that chapter, pay the attorney's fees of the other party arising out of trial de novo.

e. The court may, upon request by any party, order any witnesses to participate in the mediation or arbitration process.

F. Other Matters

1. The provisions of this Section 9-2 constitute a non-judicial claim settlement procedure that, pursuant to Government Code Section 930.2, shall constitute a condition precedent to submission of a valid Government Code claim. CONTRACTOR shall bear all costs incurred in the preparation, submission, and administration of a claim. Any claims presented in accordance with the Government Code must affirmatively indicate CONTRACTOR's prior compliance with the Claims procedure herein and the previous dispositions under Paragraphs 13.3 and 13.4 above of the claims asserted. No suit may be brought against OWNER arising out of or in connection with the Contract unless and until CONTRACTOR presents to OWNER a statutory Government Code Claim, in accordance with Government Code Sections 910, et seq. Pursuant to Government Code Section 930.2, the one-year period in Government Code Section 911.2 shall be reduced to 150 days from either accrual of the cause of action, substantial completion, or termination of the contract, whichever occurs first. In all other respects, the Government Code shall apply unchanged.

2. Failure to submit and administer Claims as required in Section 9-2 shall waive CONTRACTOR's right to claim on any specific issues not included in a timely submitted Claim. Claim(s) or issue(s) not raised in a timely protest and timely Claim submitted under this Section 9-2 may not be asserted in any subsequent litigation, Government Code Claim, or legal action.

3. The CONTRACTOR shall submit SUBCONTRACTOR claims in the same manner as other Claims. In the event a SUBCONTRACTOR (on behalf of the SUBCONTRACTOR or a lower-tier SUBCONTRACTOR) requests the CONTRACTOR in writing to present a Claim

to the OWNER and furnishes reasonable documentation supporting the Claim, the CONTRACTOR shall, within 45 days of receipt of the written request, notify the SUBCONTRACTOR in writing as to whether the CONTRACTOR presented the claim to the OWNER and, if the CONTRACTOR did not present the Claim, provide the SUBCONTRACTOR with a statement of the reasons for not doing so.

4. All waivers or modifications of this Section 9-2 may only be made a writing signed by the OWNER and the CONTRACTOR, and approved as to form by legal counsel for both. Oral or implied modifications shall be ineffective.

5. Any failure by the OWNER to respond within any time frame contained in Paragraphs B through E and their respective subparagraphs of this Section shall result in the Claim being deemed rejected in its entirety. No failure to meet a time requirement shall constitute an adverse finding with regards to the merits of the Claim or the responsibility or qualifications of the CONTRACTOR.

G. Compliance with Statutory Procedures. The foregoing provisions of Section 9-2 are intended to comply with Public Contract Code Section 9204 and, to the extent applicable, Public Contract Code Section 20104, et seq. In the event of any conflict, the applicable Public Contract Code provision will apply.

EXHIBIT A

Exhibits AI-AIII Plans

Aug. 29, 2025

EXHIBIT AI

NEWHALL PARK POOL

TEMPORARY POOL RECIRCULATION PLAN
100% CONSTRUCTION DOCUMENTS

SITE PLAN
1"=20'

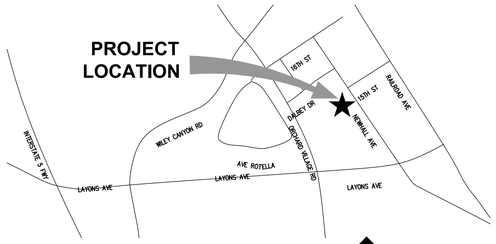

VICINITY MAP
NTS

CONTACTS:

CLIENT

CITY OF SANTA CLARITA
23920 VALENCIA BOULEVARD, SANTA CLARITA, CA 91355
PHONE: (661) 290-2235
CONTACT: KATIE KNYBEL
PROJECT MANAGER
PARKS PLANNING AND OPEN SPACE

DESIGN ENGINEER:

PACIFIC ADVANCED CIVIL ENGINEERING
17520 NEWHOPE STREET, SUITE 200
FOUNTAIN VALLEY, CA 92708
PHONE: (714) 481-7300
CONTACT: ZIRANG SONG, P.E.

SCOPE OF WORK:

TEMPORARY RECIRCULATION PLAN DURING CONSTRUCTION

NO	BY	DATE	REVISIONS	DATE	APP.

REGISTERED PROFESSIONAL ENGINEER
ZIRANG SONG
REG. #69315
Expires 06/30/26
CIVIL
STATE OF CALIFORNIA

PREPARED BY ZIRANG SONG
PROJECT ENGINEER
R.C.E. NO. -- # 69315
EXP. 06/30/2026
DRAWN E.C.
SCALE AS SHOWN
DESIGNED E.C.
CHECKED Z.S.
DATE 08/2025

TITLE
TITLE SHEET

C258
NEWHALL PARK POOL
TEMPORARY RECIRCULATION PLANS
SANTA CLARITA CA

PACE
Advanced Water Engineering
17520 Newhope Street, Suite 200 | Fountain Valley, CA 92708
P: (714) 481-7300 | www.pacewater.com

SHEET
G1.0
01 OF 06 SHEETS
JOB NO. C258

r:\C258\engineering\c258-06 (temp. recirc plans)\sheets\C258-06 G1.0 TITLE SHEET.dwg - Tab: 1 - by echen on 08/29/25 at 3:22:51 PM

Xrefs: C258 Titleblock.dwg; C258 Survey Basefile.dwg; Vicinity Map.dwg
Dimscale = 1; LTscale = 1; PSltscale = 1; ACAD Ver. = 23.0s (LMS Tech); Visretain = 1

Aug. 29, 2025

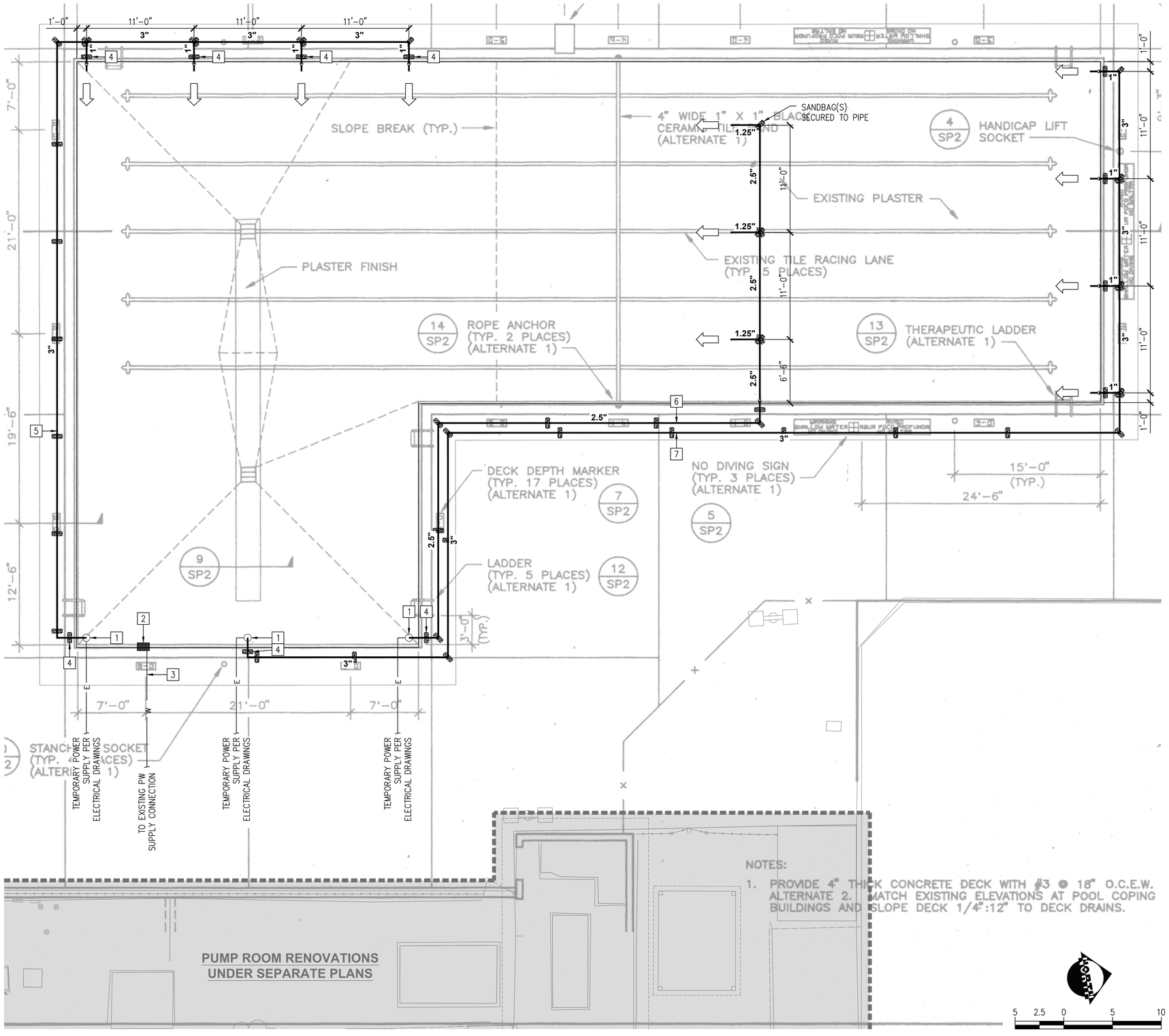

SITE PLAN

SCALE: 1"=5'-0"

LEGEND:

——— W ———	POTABLE WATER
——— E ———	ELECTRICAL SERVICE
▬▬▬▬	TEMPORARY DISCHARGE PIPING
⇨	FLOW ARROW

GENERAL NOTES:

1. THESE DRAWINGS ARE FOR THE TEMPORARY RECIRCULATION OF THE POOL DURING THE PUMP ROOM RENOVATION. FOR INFORMATION FOR THE PUMP ROOM RENOVATION, SEE "NEWHALL PARK POOL PUMP ROOM BUILDING RENOVATION PLANS 100% CONSTRUCTION DOCUMENTS."
2. THE PURPOSE OF THE SYSTEM IS TO RUN 24/7 DURING THE ENTIRE PERIOD OF CONSTRUCTION UNTIL THE PERMANENT RECIRCULATION IS UP AND RUNNING, THIS INCLUDES NIGHTS AND WEEKENDS.
3. CONTRACTOR SHALL INCLUDE PROPER SIGNAGE AND BARRIER AROUND THE POOL TO DETER ANYONE FROM ENTERING THE POOL. IF ENTERING THE POOL IS NECESSARY FOR ANY REASON, CONTRACTOR SHALL DISCONNECT THE SUBMERSIBLE PUMPS AND REMOVE FROM THE POOL.
4. CONTRACTOR TO ENSURE THAT THE TEMPORARY RECIRCULATION IS UP AND RUNNING PRIOR TO THE START OF DEMOLITION AND IS RESPONSIBLE FOR COORDINATING ALL NECESSARY WORK.
5. CONTRACTOR SHALL LOWER THE WATER LEVEL BY 4-INCHES TO KEEP ANY WATER FROM FLOWING INTO THE RIM GUTTER SYSTEM.
6. IT IS THE RESPONSIBILITY OF THE CONTRACTOR TO FURNISH, INSTALL, AND MAINTAIN ALL TEMPORARY RECIRCULATION EQUIPMENT DURING THE CONSTRUCTION DURATION AND ALSO TO DEMOLISH AND DISPOSE OF THE TEMPORARY RECIRCULATION EQUIPMENT ONCE CONSTRUCTION IS DONE. AT THE OPTION OF THE CITY, THE SUBMERSIBLE PUMPS SHALL BE PROVIDED TO THEM FOR THEIR FUTURE USE.
7. CONTRACTOR TO ENSURE THAT TEMPORARY PIPING DOES NOT POSE AS A TRIP HAZARD.

POOL WATER QUALITY:

1. THE CONTRACTOR SHALL BE RESPONSIBLE TO ENSURE THAT THE POOL'S WATER QUALITY IS AT THE CORRECT RANGES. THIS INCLUDES THE SUPPLY OF ALL NECESSARY CHEMICALS, DOSING, AND DAILY TESTING AND DOCUMENTATION. ANY DEVIATIONS FROM THE FOLLOWING PARAMETERS MAY BE DETRIMENTAL TO THE PLASTER QUALITY:
   - CSI: -0.3 TO 0.3
   - pH: 7.2 TO 7.8
   - CALCIUM HARDNESS: 300 TO 600 PPM
   - TOTAL ALKALINITY: 80 TO 120 PPM
   - FREE CHLORINE: 1 TO 3 PPM

PIPING GENERAL NOTES:

1. ALL TEMPORARY PIPING SHALL BE SCH 40 PVC FOR ALL SIZES.
2. ALL VALVES SHALL BE ROTATED/ORIENTED PER MANUFACTURE'S RECOMMENDATIONS.
3. CONTRACTOR TO PROVIDE TEMPORARY PIPE SUPPORTS BY UTILIZING SANDBAGS OR OTHER TEMPORARY WEIGHTS WITHOUT DRILLING INTO THE EXISTING CONCRETE DECK.

CONSTRUCTION NOTES:

1. SUBMERSIBLE PUMP PER "LITTLE GIANT" MODEL 10EC-CIM, 1/2 HP, 120V, 1ø, 65 GPM AT 6 FEET TDH, 20 FT CORD OR APPROVED EQUAL (3 PLCS), PROVIDE WITH CHAIN ACCESSIBLE FROM THE DECK TO LIFT THE SUBMERSIBLE PUMP OUT OF THE WATER
2. TEMPORARY POOL AUTOFILL SYSTEM PER "POOL AUTO FILL" WITH WEIGHTED PILLOW OR APPROVED EQUAL, INSTALLATION LOCATION SHALL BE FIELD DETERMINED
3. 3/4" HOSE CONNECTED TO THE POTABLE WATER SUPPLY
4. SANDBAG TO WEIGH DOWN PIPES AND AS PIPE SUPPORT
5. TEMPORARY PVC SCH 40 RECIRCULATION PIPELINE #1
6. TEMPORARY PVC SCH 40 RECIRCULATION PIPELINE #2
7. TEMPORARY PVC SCH 40 RECIRCULATION PIPELINE #3

NO	BY	DATE	REVISIONS	DATE	APP.

REGISTERED PROFESSIONAL ENGINEER ZIRANG SONG REG. #69315 Expires 06/30/26 CIVIL STATE OF CALIFORNIA

PREPARED BY ZIRANG SONG
PROJECT ENGINEER
R.C.E. NO. — # 69315
EXP. 06/30/2026

DRAWN E.C.
DESIGNED E.C.
CHECKED Z.S.
SCALE AS SHOWN
DATE 08/2025

TITLE
TEMPORARY POOL RECIRCULATION PLAN

C258
NEWHALL PARK POOL
TEMPORARY RECIRCULATION PLANS
SANTA CLARITA CA

PACE
Advanced Water Engineering
17520 Newhope Street, Suite 200 | Fountain Valley, CA 92708
P: (714) 481-7300 | www.pacewater.com

SHEET C1.0
02 OF 06 SHEETS

JOB NO. C258

Aug. 29, 2025
Xrefs: C258 Titleblock.dwg; C258 Survey Basefile.dwg
Dimscale = 1; LTscale = 1; PSltscale = 1; ACAD Ver. = 23.0s (LMS Tech); Viewtem = 1
n:\c258\engineering\c258-06 (temp. recirc pool)\sheets\c258-06 C1.0 TEMPORARY POOL RECIRCULATION PLAN.dwg - Tab: C258-06 C1.0 TEMPORARY POOL RECIRCULATION PLAN - by ezhen on 08/29/25 at 3:12:46 PM

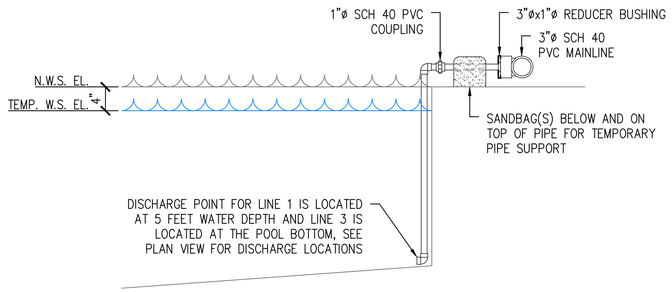

DISCHARGE POINT INSTALLATION

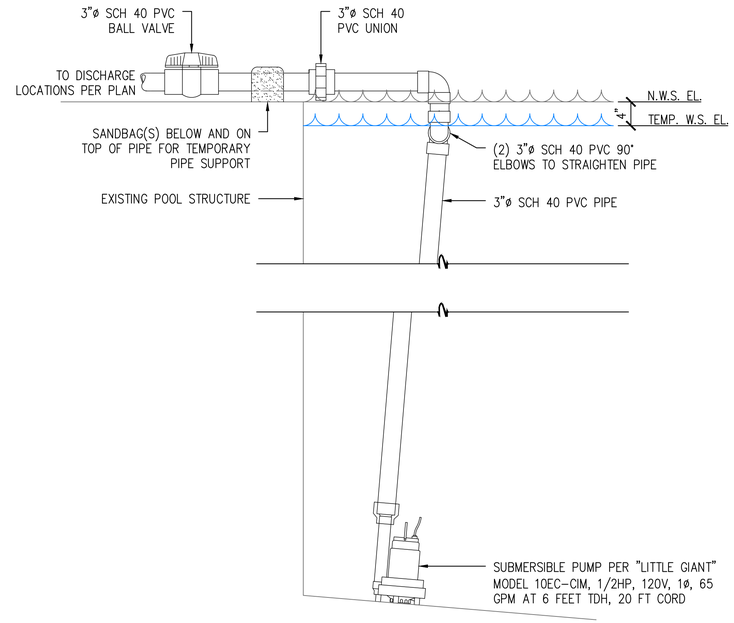

SUBMERSIBLE PUMP INSTALLATION

C TEMPORARY RECIRCULATION LINE #1 AND #3 DISCHARGE

SCALE: 1"=1'-0"

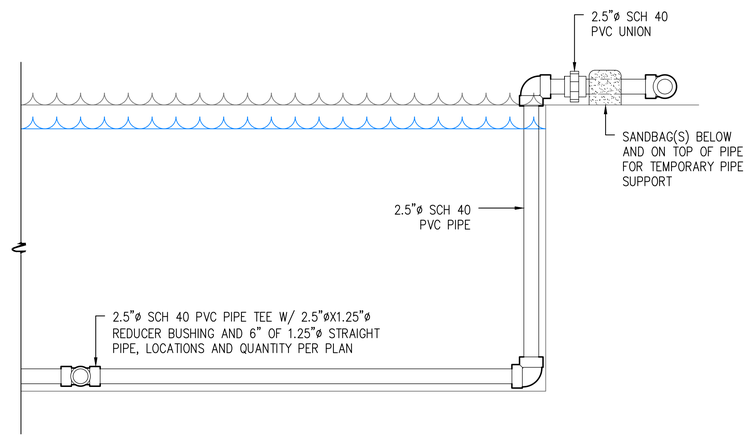

DISCHARGE POINT INSTALLATION

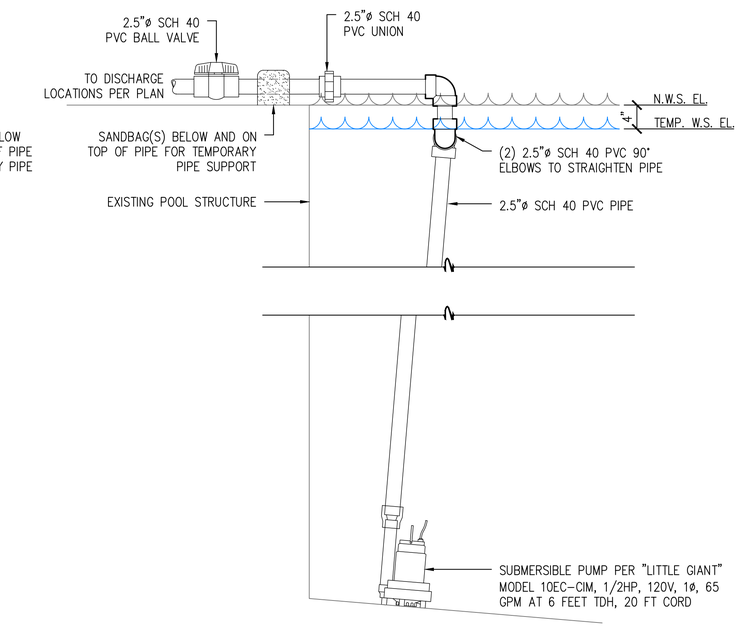

SUBMERSIBLE PUMP INSTALLATION

D TEMPORARY RECIRCULATION LINE #2 DISCHARGE

SCALE: 1/2"=1'-0"

NO	BY	DATE	REVISIONS	DATE	APP.

REGISTERED PROFESSIONAL ENGINEER
ZHANG SONG
REG.#69315
Expires 06/30/26
CIVIL
STATE OF CALIFORNIA

PREPARED BY
ZHANG SONG
PROJECT ENGINEER
R.C.E. NO. — # 69315
EXP. 06/30/2026

DRAWN	SCALE
E.C.	AS SHOWN
DESIGNED	
E.C.	
CHECKED	DATE
Z.S.	08/2025

TITLE
GENERAL DETAILS

C258

NEWHALL PARK POOL
TEMPORARY RECIRCULATION PLANS
SANTA CLARITA CA

PACE
Advanced Water Engineering
17530 Newhope Street, Suite 200 | Fountain Valley, CA 92708
P: (714) 481-7300 | www.pacewater.com

SHEET
C2.0
03 OF 06 SHEETS

JOB NO. C258

Aug. 29, 2025
Xrefs: C258 Titleblock.dwg
Dimscale = 1, LTscale = 1, PSltscale = 1, ACAD Ver. = 23.0s (LMS Tech), Visretain = 1
J:\C258\engineering\c258-06 (temp. recirc plans)\sheets\C258-06 C2.0 GENERAL DETAILS.dwg - Tab: C258-06 C2.0 GENERAL DETAILS - by eshen on 08/07/25 at 10:47:37 AM

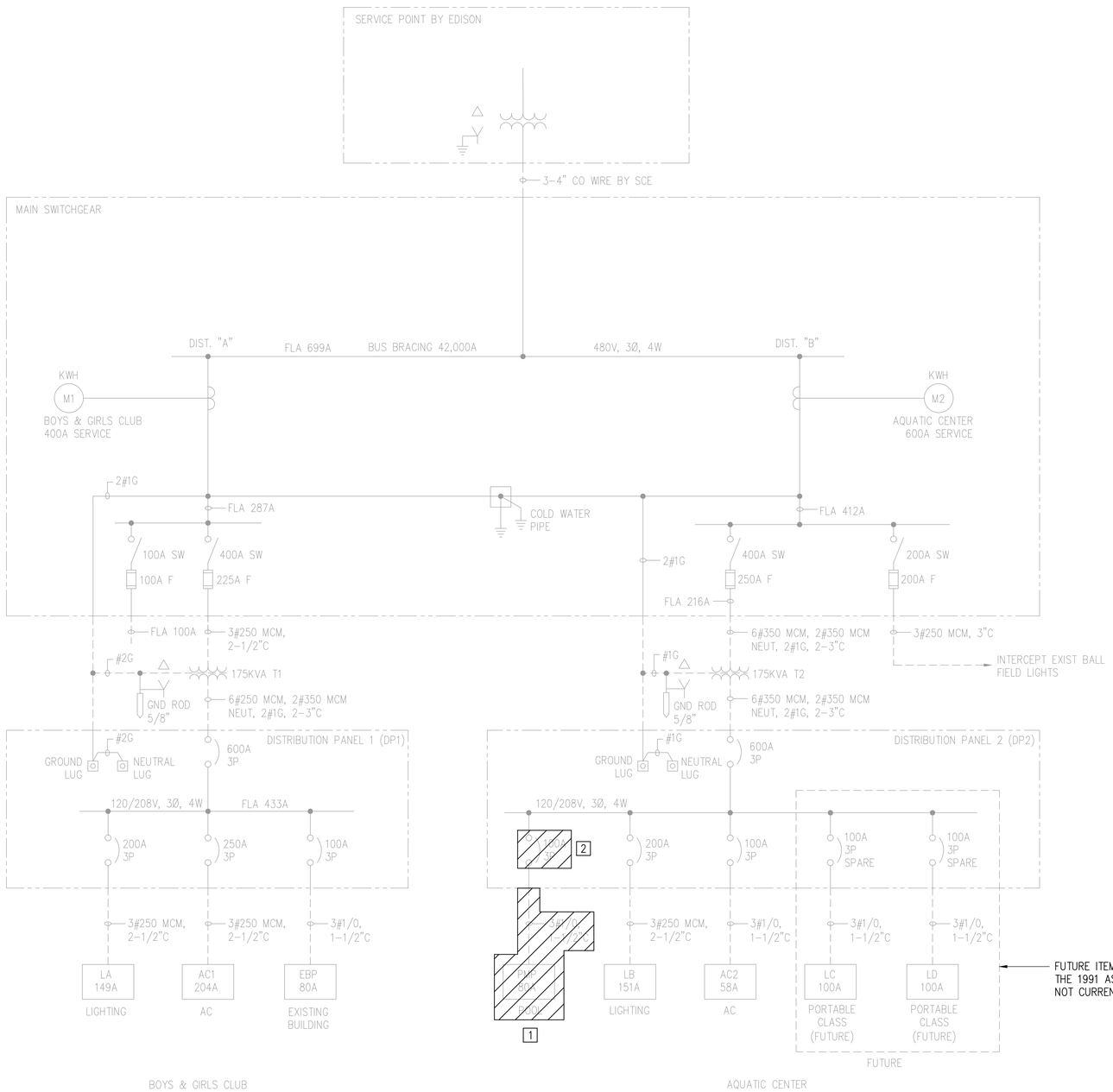

SINGLE LINE DIAGRAM DEMO
NTS

CONSTRUCTION NOTES:

1. REMOVE EXISTING PANEL "PMP" AND ASSOCIATED POWER CONDUIT/FEEDER CABLES AND DISPOSE.
2. USE THE EXISTING CIRCUIT BREAKER TO POWER THE TEMPORARY 100A SPIDER BOX. REMOVE THE CIRCUIT BREAKER AND REPLACE PER SHEET E1.0 WHEN THERE IS NO LONGER NEED FOR TEMPORARY POWER.
3. EXISTING POOL DECK LT POLE RECEPTACLES TO BE REPLACED. SEE SHT E1.0.
4. CONTRACTOR TO CONFIRM THE WET NICHE FORMING SHELL IS NON-METALLIC, OTHERWISE REPLACE ALL POOL NICHE LIGHTS TO METALLIC. EXISTING OR NEW POOL LIGHTS TO BE TRANSFERRED TO PROPOSED LIGHTING CONTROL PANEL (LCP-A).
5. EXISTING POOL DECK POLE-MTD LIGHT FIXTURES TO BE REMOVED AND REPLACED PER SHEET E2.0.
6. EXISTING SUMP PUMP TO REMAIN IN PLACE. TRANSFER TO REPLACEMENT PANEL-PMP, SEE SHT E1.0.
7. EXISTING EQUIPMENT TO BE REMOVED, SEE MECH DEMO PLANS. REMOVE ALL ANCILLARY ELECTRICAL COMPONENTS AND RETURN MAJOR ITEMS SUCH AS PANELS, CONTROLLERS, ETC. TO OWNER. DISPOSE OF MINOR ITEMS SUCH AS CONDUITS, WIRING, ETC.
8. CONTRACTOR TO VERIFY LOADS BEFORE DEMOLISHING AND NOTIFY ENGINEER OF RECORD IF ANY DISCREPENCIES FOUND.

NOTES:

1. FADED BACK ITEMS ARE EXISTING TO BE PROTECTED IN PLACE UNLESS NOTED OTHERWISE.
2. SINGLE LINE DIAGRAM HAS BEEN GENERATED FROM AS-BUILTS DATED SEPTEMBER 1991 BY DESCO ELECTRIC. CONTRACTOR TO CONFIRM AND NOTIFY ENGINEER OF RECORD IF ANY DISCREPENCIES FOUND.
3. NOT ALL ITEMS TO BE DEMO'D ARE SHOWN ON THIS SHEET. SEE REST OF PLAN SET FOR ADDITIONAL DEMO DETAILS.

1 8

EXISTING PANEL-PMP

	VOLTAGE:	120/240 VAC			VOLT AMPS					MAIN BKR:	80	A	
												A	
	LOAD DESCRIPTION	VA	CB	BKR	PHASE A	PHASE B	BKR	CB	VA	LOAD DESCRIPTION			
7	~~POOL HEATER~~		30/1	1	0		2	20/1		~~ATP CHEM MTR~~			7
7	~~HTR CHEM 240V RECEP~~		20/2	3		0	4	20/1		SPARE			
				5	0		6	20/1		~~PRESS PUMP~~			7
7	~~STRAINER~~		20/1	7		0	8	20/1		~~ATP CHEM MTR CONTROL~~			7
3	~~POOL DECK LT POLE RECEP~~			9	0		10	20/1		~~POOL DECK LTS CTRL CKT~~			5
	SPARE		20/1	11		0	12	20/1		~~EXT BLDG LTS (N)~~			7
4	POOL LIGHTS (EAST)		15/1	13	0		14	20/1		~~POOL RECEPT~~			5
7	~~DLT REMV~~		20/1	15		0	16	20/1		~~POOL RECEPT~~			5
	SPARE		20/1	17	0		18	20/1		~~POOL RECEPT~~			5
4	POOL LIGHTS (WEST)		15/1	19		0	20	20/1		~~POOL RECEPT~~			5
	SPARE		20/2	21	0		22	20/1		~~POOL DECK LTS CTRL CKT~~			5
				23		0	24	20/1		SUMP PUMP			6
	"SPACE"			25			26	20/2		~~POOL RECEP 240V RECEP GFCI~~			7
	"SPACE"			27			28						
	"SPACE"			29			30			"SPACE"			
					PHASE A	PHASE B							
	VA/PHASE (SUBTOTAL)						1Φ, 3W						
	AMPS/LEG (SUBTOTAL)												
	VA (SUBTOTAL)												
	25% OF LARGEST INDUCTIVE LOAD												
	GRAND TOTAL (AMPS)						* INDICATES LOAD CALCULATED AT 125%						
	PERCENT CAPACITY												

NO	BY	DATE	REVISIONS	DATE	APP.

LICENSED PROFESSIONAL ENGINEER BASHAR ISHAQ E 24590 EXP. 06/30/27 ELECTRICAL STATE OF CALIFORNIA

PREPARED BY BASHAR ISHAQ
PROJECT ENGINEER
R.C.E. NO. — # E24590
EXP. 06/30/2027
DRAWN JR
SCALE AS SHOWN
DESIGNED BI
CHECKED BI
DATE 08/2025

TITLE
SINGLE LINE DIAGRAM DEMO

C258
NEWHALL PARK POOL
PUMP ROOM RENOVATION
PLANS (100% CD)
SANTA CLARITA CA

PACE
Advanced Water Engineering
17520 Newhope Street, Suite 200 | Fountain Valley, CA 92708
P: (714) 481-7300 | www.pacewater.com

SHEET
E1.0D
04 OF 06 SHEETS

JOB NO. C258

Aug. 29, 2025
Xrefs: C258 Titleblock_ELEC.dwg
Dimscale = 40, Ltscale = 1, PSltscale = 1, ACAD Ver. = 23.0s (LMS Tech), Viewtab = 1
z:\C258\engineering\c258-06 (temp. recirc panel)\sheets\C258-06 E1.0D.dwg - Tab: 04 - by eshen on 08/29/25 at 3:22:44 PM

Aug. 29, 2025

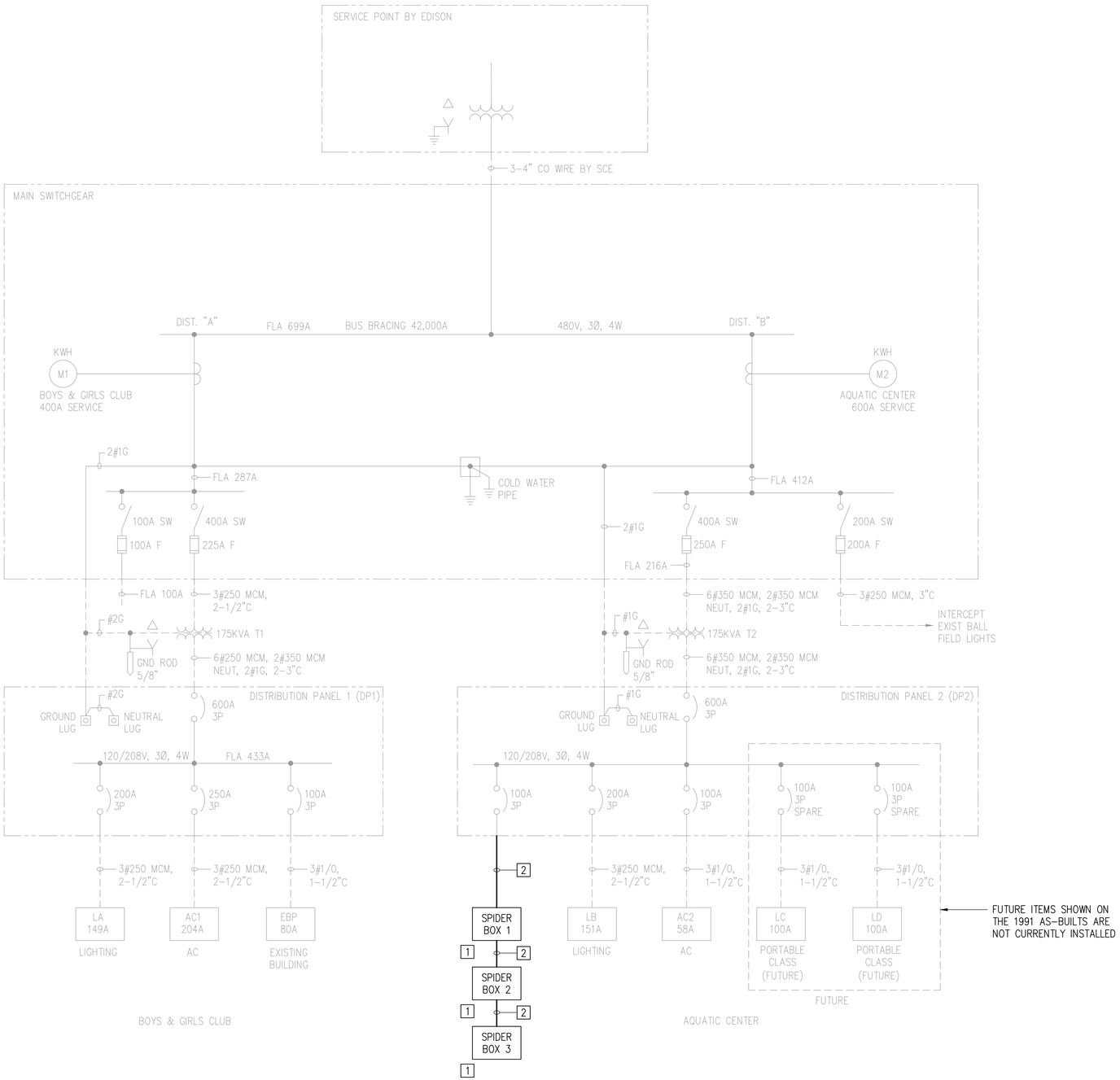

SINGLE LINE DIAGRAM PROPOSED TEMPORARY POWER

NTS

CONSTRUCTION NOTES:

1. PROVIDE, INSTALL, AND SECURE IN PLACE A 100A, 208/120V, NEMA 3R SPIDER BOX. ALL 120V RECEPTACLES MUST BE GFCI. INSTALL 6 FT AWAY FROM POOL.
2. INSTALL SOOW CABLE (2 AWG) PROTECTED IN HEAVY-DUTY CABLE PROTECTOR (POWER RAMP).

NOTES:

1. FADED BACK ITEMS ARE EXISTING TO BE PROTECTED IN PLACE UNLESS NOTED OTHERWISE.
2. SINGLE LINE DIAGRAM HAS BEEN GENERATED FROM AS-BUILTS DATED SEPTEMBER 1991 BY DESCO ELECTRIC. CONTRACTOR TO CONFIRM AND NOTIFY ENGINEER OF RECORD IF ANY DESCREPENCIES FOUND.
3. EXISTING SUMP PUMP IS UNKNOWN AT THIS TIME. LOADS ARE ESTIMATED AT 80% OF THE EXISTING BREAKER SIZES.

EXISTING DISTRIBUTION PANEL 2 (DP-2) LOAD SUMMARY (600A MCB @208V)		
LOAD DESCRIPTION	CONNECTED (AMPS)	ACTIVE (AMPS)
TEMPORARY SUBMERSIBLE POOL PUMPS	29.4	29.4
EXISTING PANEL-LB	151	151
EXISTING PANEL-AC2	58	58
SUBTOTAL	238.4	238.4
25% LARGEST MOTOR LOAD	11.55	11.55
GRAND TOTAL (AMPS)	250.0	250.0
% CAPACITY		41.7%

NO	BY	DATE	REVISIONS	DATE	APP.

LICENSED PROFESSIONAL ENGINEER BASHAR WATER ISHAQ E 24590 EXP. 06/30/27 ELECTRICAL STATE OF CALIFORNIA

PREPARED BY BASHAR ISHAQ
PROJECT ENGINEER
R.C.E. NO. -- # E24590
EXP. 06/30/2027
DRAWN JR
SCALE AS SHOWN
DESIGNED BI
CHECKED BI
DATE 08/2025

TITLE
SINGLE LINE DIAGRAM PROPOSED TEMPORARY POWER

C258
NEWHALL PARK POOL
PUMP ROOM RENOVATION PLANS (100% CD)
SANTA CLARITA CA

PACE
Advanced Water Engineering
17520 Newhope Street, Suite 200 | Fountain Valley, CA 92708
P: (714) 481-7300 | www.pacewater.com

SHEET
E1.0T
05 OF 06 SHEETS

JOB NO. C258

r:\C258\engineering\c258-06 (temp. recirc plans)\sheets\C258-06 E1.0T.dwg - Tab: 05 - by echen on 08/29/25 at 3:22:34 PM

Xrefs: C258 Titleblock_ELEC.dwg
Dimscale = 40; LTscale = 1; PSltscale = 1; ACAD Ver. = 23.0s (LMS Tech); Visretain = 1

Aug. 29, 2025

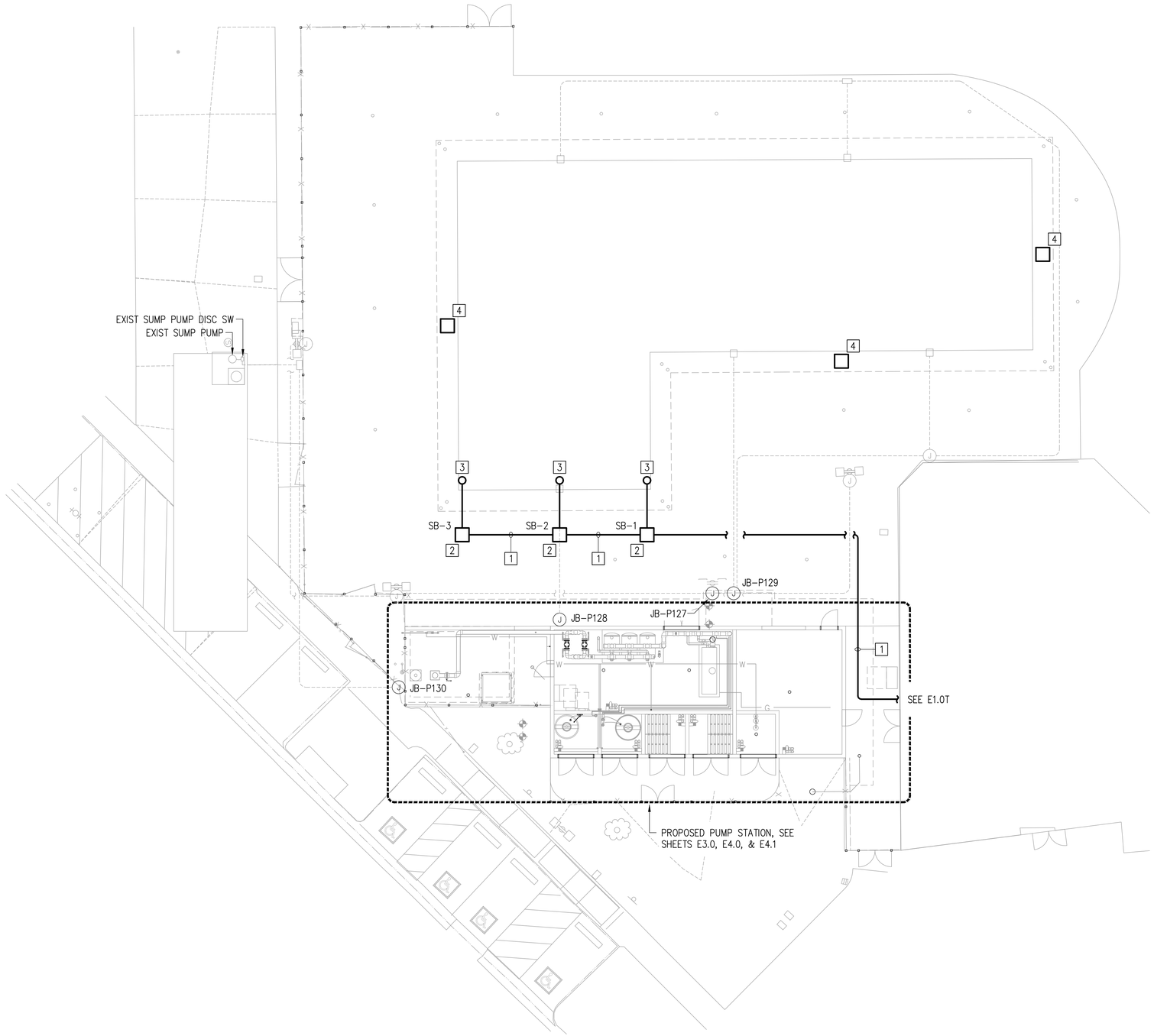

ELECTRICAL SITE PLAN TEMPORARY POWER

SCALE: 1"=10'-0"

CONSTRUCTION NOTES:

1. INSTALL SOOW CABLE (2 AWG) PROTECTED IN HEAVY-DUTY CABLE PROTECTION (POWER RAMP).
2. PROVIDE, INSTALL, AND SECURE IN PLACE A 100A, 208/120V, NEMA 3R SPIDER BOX. ALL 120V RECEPTACLES MUST BE GFCI. INSTALL 6 FT AWAY FROM POOL.
3. 1/2 HP SUBMERSIBLE PUMP, PER LITTLE GIANTS MODEL "10EC-CIM", 120V WITH 20' CORD.
4. CONTRACTOR TO SET UP WARNING SIGNS "DO NOT ENTER THE POOL".

NOTES:

1. GROUND AND BOND ALL EQUIPMENT AND ENCLOSURES PER MANUFACTURER REQUIREMENTS AND NEC 250.
2. LAYOUT OF EXISTING CONDUITS/J-BOXES SHOWN ARE APPROXIMATED FROM AS-BUILTS DATED FEBRUARY 1992 BY JONES AND MADHAVEN. CONTRACTOR TO NOTIFY ENGINEER OF RECORD IF ANY DISCREPENCIES FOUND.
3. LABEL ABOVEGROUND CONDUITS PER DETAIL "C" SHEET E7.0.
4. TYPICAL CONDUIT TRANSITIONS/STUB-UPS PER DETAILS "A, B, C" SHEET E7.1.

LEGEND:

POLE-MTD. DUAL FLOOD LIGHTS, 3-WAY FIELD ADJUSTABLE, 140/100/70W, 3000K/4000K/5000K ADJUSTABLE COLOR TEMP, TRUNNION-MTD, 120V, 1PH, MF'R: RAB, PN X17-XFU-140-T (OR APPROVED EQUAL). EXISTING POLE, TYP 2 LIGHTS PER POLE.

EXISTING JUNCTION BOX.

LISTED POOL NEMA 4X JUNCTION BOX, SEE DETAIL "F" SHEET E7.1.

120V, 1PH, GFCI WEATHER RESISTANT RECEPTACLE.

NO	BY	DATE	REVISIONS	DATE	APP.

LICENSED PROFESSIONAL ENGINEER BASHAR W. ISHAQ E 24590 EXP. 06/30/27 ELECTRICAL STATE OF CALIFORNIA

PREPARED BY
BASHAR ISHAQ
PROJECT ENGINEER
R.C.E. NO. — # E24590
EXP: 06/30/2027

DRAWN	SCALE
JR	AS SHOWN
DESIGNED	
BI	
CHECKED	DATE
BI	08/2025

TITLE
ELECTRICAL SITE PLAN TEMPORARY POWER

C258
NEWHALL PARK POOL
PUMP ROOM RENOVATION
PLANS (100% CD)
SANTA CLARITA *CA*

PACE
Advanced Water Engineering
17530 Newhope Street, Suite 200 | Fountain Valley, CA 92708
P: (714) 481-7300 | www.pacewater.com

SHEET
E2.0T
06 OF 06 SHEETS

JOB NO. C258

Xrefs: C258 Titleblock_ELEC.dwg; Mechanical Layout.dwg; C258 Survey Baseflie.dwg; Piping Layout.dwg; Grading Plan.dwg; C258 Survey Baseflie civil 3d.dwg
Dimscale = 40; LTscale = 1; PSltscale = 1; ACAD Ver. = 23.0s (LMS Tech); Viewtoth = 1

c:\C258\engineering\c258-06 (temp. recirc piping)\sheets\C258-04 E2.0T.dwg - Tab: 06 - by eshen on 08/29/25 at 3:22:26 PM

Docusign Envelope ID: 33100FCC-CB5A-4172-A3CA-C39BFAECD023

Sep. 29, 2025

EXHIBIT AII

NEWHALL PARK POOL

PUMP ROOM BUILDING RENOVATION PLANS
100% CONSTRUCTION DOCUMENTS

IN ACCORDANCE WITH RESOLUTION No. 19-6, AS A RESOLUTION OF THE CITY COUNCIL OF THE CITY OF SANTA CLARITA DELEGATING DISCRETIONARY AUTHORITY TO THE DIRECTOR OF PUBLIC WORKS, DIRECTOR OF RECREATION AND COMMUNITY SERVICES, DIRECTOR OF BUILDING AND SAFETY, DIRECTOR OF PLANNING, AND ASSISTANT CITY ENGINEERS TO APPROVE PLANS AND DESIGNS FOR THE CONSTRUCTION OF OR IMPROVEMENTS TO PUBLIC PROPERTY FOR PURPOSES OF DESIGN IMMUNITY PURSUANT TO GOVERNMENT CODE SECTION 830.6; FOR THE CITY OF SANTA CLARITA, I DO HEREBY EXERCISE THE DISCRETION DELEGATED TO ME AND APPROVE THE PLAN OR DESIGN, OR AMENDMENT OR MODIFICATION TO THE PLAN OR DESIGN, OR A CONSTRUCTION, OF OR AN IMPROVEMENT TO THE PUBLIC FACILITY, STRUCTURE, OR PROPERTY TO WHICH THIS STATEMENT, MY SIGNATURE AND DATE IS AFFIXED.	REVIEWED BY:		REVIEWED BY: Signature on file	10/01/2025	APPROVED FOR CONSTRUCTION BY: Signature on file	10/02/2025	APPROVED FOR CONSTRUCTION BY: Signature on file	10/02/2025
	PM - DESIGN	EXECUTION DATE	PM - CONSTRUCTION	EXECUTION DATE	JERRID MCKENNA NEIGHBORHOOD SERVICES DIRECTOR	EXECUTION DATE	DAMON LETZ CITY ENGINEER	EXECUTION DATE
	Initial: SN						Initial: ADFSP	

SITE PLAN
1"=20'

20 10 0 20 40

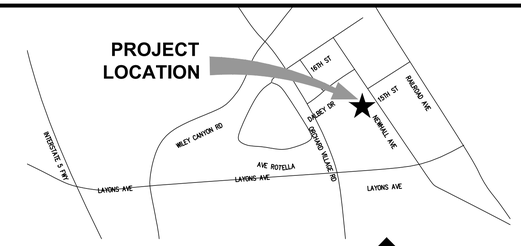

VICINITY MAP
NTS

CONTACTS:

CLIENT
CITY OF SANTA CLARITA
23920 VALENCIA BOULEVARD, SANTA CLARITA, CA 91355
PHONE: (661) 290-2235
CONTACT: KATIE KNYBEL
PROJECT MANAGER
PARKS PLANNING AND OPEN SPACE

DESIGN ENGINEER:
PACIFIC ADVANCED CIVIL ENGINEERING
17520 NEWHOPE STREET, SUITE 200
FOUNTAIN VALLEY, CA 92708
PHONE: (714) 481-7300
CONTACT: ZIRANG SONG, P.E.

STRUCTURAL ENGINEER
SPIRE STRUCTURAL ENGINEERING
26461 RANCHO PARKWAY SOUTH,
LAKE FOREST, CA 92630
PHONE: (949) 916-3440
CONTACT: ALEXANDROS BLETSOS

GEOTECHNICAL ENGINEER:
AMERICAN GEOTECHNICAL
22725 OLD CANAL RD, YORBA LINDA, CA 92887
PHONE: (858) 450-4040
CONTACT: ALVA ALVAPPILLAI

ARCHITECT
SQUARE ONE ARCHITECTURE, INC
671 VIA ALONDRA SUITE 811-A,
CAMARILLO, CA 93012
PHONE: (562) 900-5862
CONTACT: KHANH DOAN

SURVEY CONSULTANT
HUITT-ZOLLARS
2603 MAIN ST #400, IRVINE, CA 92614
PHONE: (949) 988-5815
CONTACT: MICHAEL KREMER

Sheet List Table

SHEET NUMBER	SHEET TITLE
GENERAL	
G1.0	TITLE SHEET
G1.1	GENERAL NOTES
G1.2	EROSION CONTROL AND FENCING PLAN
DEMOLITION	
D1.0	SITE DEMOLITION PLAN
D2.0	UTILITY DEMOLITION PLAN
D3.0	MECHANICAL DEMOLITION PLAN
CIVIL	
C1.0	SITE AND UTILITY PLAN
C2.0	GRADING AND DRAINAGE PLAN
C2.1	NORTHING AND EASTING TABLE
C2.2	GENERAL SECTIONS
C3.0	GENERAL DETAILS
C3.1	GENERAL DETAILS
C3.2	GENERAL DETAILS
ARCHITECTURAL	
A1.0	RENDERINGS
A1.1	FLOOR PLAN
A1.2	ROOF AND REFLECTED CEILING PLAN
A2.1	EXTERIOR ELEVATIONS
A2.2	BUILDING SECTIONS
A3.1	WINDOW DOOR DETAILS AND SCHEDULES
A3.2	ROOF DETAILS
STRUCTURAL	
S0.1	GENERAL NOTES
S0.2	GENERAL NOTES
S0.3	TYPICAL DETAILS
S0.4	TYPICAL DETAILS
S0.5	TYPICAL DETAILS
S1.1	FOUNDATION PLAN
S1.2	ROOF FRAMING PLAN
S2.1	DETAILS
S2.2	DETAILS

Sheet List Table

Sheet Number	Sheet Title
MECHANICAL	
M1.0	EQUIPMENT LIST
M2.0	EQUIPMENT LAYOUT PLAN
M2.1	PIPING PLAN
M2.2	BUILDING FOOTPRINT
M3.0	PUMP ROOM SECTION
M3.1	PUMP ROOM SECTION
M4.0	PUMP ROOM DETAILS
M4.1	PUMP ROOM DETAILS
M4.2	PUMP ROOM DETAILS
M4.3	PUMP ROOM DETAILS
M4.4	PUMP ROOM DETAILS
ELECTRICAL	
E0.0	GENERAL NOTES
E0.1	LEGEND & ABBREVIATIONS
E1.0D	SINGLE LINE DIAGRAM DEMO
E1.0	SINGLE LINE DIAGRAM PROPOSED
E2.0D	ELECTRICAL SITE DEMO PLAN
E2.0	ELECTRICAL SITE PLAN
E3.0	ELECTRICAL PLAN
E4.0	LIGHTING AND RECEPTACLE PLAN
E4.1	GROUNDING PLAN
E5.0	CABLE & CONDUIT SCHEDULES I
E5.1	CABLE & CONDUIT SCHEDULES II
E6.0	ELEMENTARY CONTROL DIAGRAM I
E6.1	ELEMENTARY CONTROL DIAGRAM II
E7.0	ELECTRICAL DETAILS I
E7.1	ELECTRICAL DETAILS II
E7.2	ELECTRICAL DETAILS III
E8.0	TITLE 24 INDOOR LIGHTING FORM I
E8.1	TITLE 24 INDOOR LIGHTING FORM II
E8.2	TITLE 24 OUTDOOR LIGHTING FORM I
E8.3	TITLE 24 OUTDOOR LIGHTING FORM II
E8.4	TITLE 24 POWER DISTRIBUTION FORM

PACE
Advanced Water Engineering
17520 Newhope Street, Suite 200 | Fountain Valley, CA 92708
P: (714) 481-7300 | www.pacewater.com

CITY OF SANTA CLARITA
BUILDING & SAFETY
APPROVED
Under SCMC Titles
16, 19, 20, 21, 24, 25
Sep 16, 2025
F. Svendsen
BLD25-00576 (ARCH)
The approved plans must be available at the construction site at all times. Changes or alterations to approved plans shall not be made without written permission from the City of Santa Clarita Building & Safety Division. The approval of these plans shall not be construed to permit or approve any violation of the applicable codes, ordinances, or other laws.

REVIEWED BY:	
PM - DESIGN	EXECUTION DATE
REVIEWED BY:	
PM - CONSTRUCTION	EXECUTION DATE

IN ACCORDANCE WITH RESOLUTION No. 19-6, AS A RESOLUTION OF THE CITY COUNCIL OF THE CITY OF SANTA CLARITA DELEGATING DISCRETIONARY AUTHORITY TO THE DIRECTOR OF PUBLIC WORKS, DIRECTOR OF RECREATION AND COMMUNITY SERVICES, DIRECTOR OF BUILDING AND SAFETY, DIRECTOR OF PLANNING, AND ASSISTANT CITY ENGINEERS TO APPROVE PLANS AND DESIGNS FOR THE CONSTRUCTION OF OR IMPROVEMENTS TO PUBLIC PROPERTY FOR PURPOSES OF DESIGN IMMUNITY PURSUANT TO GOVERNMENT CODE SECTION 830.6; FOR THE CITY OF SANTA CLARITA, I DO HEREBY EXERCISE THE DISCRETION DELEGATED TO ME AND APPROVE THE PLAN OR DESIGN, OR AMENDMENT OR MODIFICATION TO THE PLAN OR DESIGN, OR A CONSTRUCTION, OF OR AN IMPROVEMENT TO THE PUBLIC FACILITY, STRUCTURE, OR PROPERTY TO WHICH THIS STATEMENT, MY SIGNATURE AND DATE IS AFFIXED.

REGISTERED PROFESSIONAL ENGINEER
ZIRANG SONG
REG. #69315
Expires 06/30/26
CIVIL
STATE OF CALIFORNIA

PREPARED BY
ZIRANG SONG
PROJECT ENGINEER
R.C.E. NO. # 69315
EXP. 06/30/2026

DRAWN	SCALE	DATE
J.P		03/2025
DESIGNED		
J.P		
CHECKED		
Z.S		

TITLE
TITLE SHEET

C258
NEWHALL PARK POOL
PUMP ROOM RENOVATION
PLANS (100% CD)
SANTA CLARITA *CA*

SHEET **G1.0**
01 OF 61 SHEETS

JOB NO. C258

Xrefs: C258 Survey Baseline.dwg; Vicinity Map.dwg; C258 Titleblock.dwg
Dimscale = 1; LTscale = 1; PSltscale = 1; ACAD Ver. = 23.0s (LMS Tech); Visretain = 1
R:\C258\engineering\c258-04 (100% cd)\sheets\C258-04 G1.0 TITLE SHEET.dwg - Tab: 01 - by gerardorghost on 09/29/25 at 11:22:15 AM

Sep. 29, 2025

LEGEND:

W	POTABLE WATER
RW	NON-POTABLE WATER
SS	SANITARY SEWER
SD	STORM DRAIN
E	ELECTRICAL SERVICE
G	NATURAL GAS
CL	DOUBLE WALL CHLORINE FILL LINE
AD	DOUBLE WALL ACID FILL LINE
	DISCHARGE PIPE
	INTAKE PIPE
	POINT OF CONNECTION
	CAP FOR FUTURE CONNECTION

GENERAL NOTES:

1. CONTRACTOR TO VERIFY ELEVATIONS AND DIMENSIONS OF EXISTING INFRASTRUCTURE BEFORE CONSTRUCTION BEGINS.
2. THESE PLANS ARE INTENDED FOR PUMP ROOM, POOL AREA FENCING, AND ADJACENT SITE CONSTRUCTION USE ONLY. SEE DRAWINGS BY RESPECTIVE DESIGNERS FOR OTHER ASPECTS OF CONSTRUCTION.
3. ALL RECIRCULATION PIPE SHALL BE INSTALLED SO THE FLOW IS SLIGHTLY OFF LEVEL OR UPHILL TO PREVENT AIR TRAPS AND SHALL HAVE A 3'–0" (MIN) COVER OUTSIDE WATER FEATURE LIMITS AND A 1'–0" (MIN) COVER WITHIN UNLESS OTHERWISE NOTED.
4. ALL PVC PIPE SHALL BE PER THE FOLLOWING SCHEDULE UNLESS OTHERWISE NOTED:

UNDERGROUND PIPING	SCH 40 PVC
PIPING INSIDE PUMP ROOM	SCH 80 PVC

5. THRUST BLOCKS ARE REQUIRED FOR RUBBER GASKETED JOINT PIPES. PIPES W/ SOLVENT WELDED OR FUSED JOINTS DO NOT REQUIRE THRUST BLOCKS.
6. WATER LEVELS SHOWN INDICATE AVERAGE SURFACE ELEVATIONS DURING OPERATION. ELEVATIONS MAY DIFFER DURING SHUTDOWN CONDITIONS.
7. ALL MANUFACTURER PRODUCT CALL–OUTS SHOWN IN THESE PLANS SHALL BE CONSIDERED "OR APPROVED EQUAL" UNLESS OTHERWISE NOTED.
8. THE PUMP ROOM CONTRACTOR SHALL VERIFY THE AVAILABLE ELECTRICAL POWER PRIOR TO PURCHASING EQUIPMENT.
9. CONTACT 811 AND HAVE UTILITIES MARKED PRIOR TO CONSTRUCTION.
10. POTHOLE ALL MARKED UTILITIES BEFORE CONSTRUCTION.

PUMP STATION CONSTRUCTION NOTES:

1. ALL EQUIPMENT SPECIFIED SHALL MEET THE APPLICATION FOR WHICH IT IS BEING UTILIZED PER MANUFACTURER'S RECOMMENDATIONS.
2. ALL MAJOR EQUIPMENT (I.E., PUMPS, FILTERS, HEATERS, ETC.) SHALL BE LOCATED ON HOUSEKEEPING PADS AT A MINIMUM OF 4" ABOVE THE FINISHED FLOOR LEVEL.
3. SERVICE FLANGES OR UNIONS SHALL BE PROVIDED FOR ALL MAJOR ELEMENTS OF THE SYSTEM (I.E., PUMPS, FILTERS, UV EQUIPMENT, HEAT EXCHANGERS, SOLENOID VALVES, ETC.) TO ALLOW FOR QUICK REMOVAL FROM SYSTEM WITHOUT THE NEED TO CUT PIPING OR BREAK THE PIPING.
4. ALL MAJOR EQUIPMENT INCLUDING VALVES SHALL BE IDENTIFIED BY CORROSION RESISTANT PERMANENT TAGS THAT CORRESPOND TO THE DESIGNATION ON THE AS–BUILT DRAWINGS AND DOCUMENTATION.
5. ALL PIPING SHALL BE LABELED FOR FUNCTION (I.E., FILTER DISCHARGE, SKIMMER SUCTION, ETC.) AND FOR FLOW DIRECTION.
6. CONTRACTOR SHALL PROVIDE AIR RELIEF VALVES FOR ALL PIPING HIGH POINTS GENERATED DURING PLUMBING OF ALL THE PIPING.
7. EPOXY COAT REQUIRED FOR ALL WET SURFACES ON ALL PUMPS.
8. THE POOL CIRCULATION PUMPS ARE EQUIPPED WITH VFD THAT ALLOWS THE USER TO SET THE GPM DURING OFF–PEAK HOURS AS WELL AS NORMAL OPERATING HOURS GPM.
9. FIRE RATED PIPE PENETRATIONS & WALL DETAILS PER ARCHITECT PLANS.
10. PREPARE SUBGRADE PER GEOTECHNICAL ENGINEER RECOMMENDATIONS.
11. CONTRACTOR TO VERIFY ALL EQUIPMENT DIMENSIONS PRIOR TO PURCHASE AND INSTALLATION OF EQUIPMENT.
12. CONTRACTOR TO INSTALL PUMP BASE AND BRACKETS PER MANUFACTURER'S REQUIREMENTS.
13. CONTRACTOR TO PROVIDE FLASHING/SEALS FOR ALL BUILDING/STRUCTURE WALL PENETRATIONS.
14. ALL ANCHORING SYSTEMS SHALL BE 316 S.S. REGARDLESS OF LOCATION UNLESS NOTED OTHERWISE.
15. CONTRACTOR SHALL SUBMIT SHOP DRAWINGS FOR REVIEW FOR EACH CONTRACTOR SUPPLIED EQUIPMENT ITEM PRIOR TO INSTALLATION.
16. INSTALLATION DETAILS FOR ALL EQUIPMENT ITEMS SHALL BE PER RESPECTIVE EQUIPMENT MANUFACTURER'S SHOP DRAWINGS AND RECOMMENDED INSTALLATION REQUIREMENT.

PUMP STATION PIPING NOTES:

1. CONTRACTOR TO PROVIDE PIPE SUPPORTS PER EQUIPMENT MANUFACTURER'S REQUIREMENTS AND SPECIFICATIONS AND PER THE PROJECT SPECIFICATIONS.
2. ALL BURIED PVC PIPE SHOWN ON PLANS SHALL BE SCH 40 PVC UNLESS NOTED OTHERWISE.
3. ALL PVC PIPE ABOVE GRADE SHALL BE SCH 80 PVC FOR ALL SIZES.
4. ALL STAINLESS STEEL PIPE SHOWN ON PLANS SHALL BE MINIMUM TYPE 304L SCH 10 UNLESS NOTED OTHERWISE.
5. ALL PROCESS PIPES SHALL BE COLOR COATED PER THE PROJECT SPECIFICATIONS WITH THE EXCEPTION OF STAINLESS STEEL PIPES.
6. ALL VALVES SHALL BE ROTATED/ORIENTED PER MANUFACTURE'S RECOMMENDATIONS.

NOTE FOR EQUIPMENT TO BE PROTECTED AND REUSED:

1. TAKE EQUIPMENT OFF–SITE TO A PROTECTED LOCATION FOR STORAGE DURING CONSTRUCTION. COORDINATE WITH THE CITY FOR STORAGE REQUIREMENTS.
2. CONTRACTOR TO REINSTALL SAVED EQUIPMENT PER MECHANICAL PLANS
3. CONTRACTOR TO TEST ALL REINSTALLED EQUIPMENT PRIOR TO REUSE TO ENSURE ALL EQUIPMENT IS IN PROPER WORKING CONDITION
4. CONTRACTOR TO FOLLOW INSTALLATION MANUAL FOR ALL REINSTALLED EQUIPMENT SEISMIC FASCINING REQUIRENMENTS.

CITY OF SANTA CLARITA
BUILDING & SAFETY
APPROVED
Under SCMC Titles 18, 19, 20, 21, 24, 25
Sep 16, 2025
F. Svendsen
BLD25-00576 (ARCH)
The approved plans must be available at the construction site at all times. Changes or alterations to approved plans shall not be made without written permission from the City of Santa Clarita Building & Safety Division. The approval of these plans shall not be construed to permit or approve any violation of the applicable codes, ordinances, or other laws.

PACE
Advanced Water Engineering
17520 Newhope Street, Suite 200 | Fountain Valley, CA 92708
P: (714) 481-7300 | www.pacewater.com

REVIEWED BY: Luis Trujillo PM - DESIGN	09/30/2025 EXECUTION DATE
REVIEWED BY: Vincent Gil PM - CONSTRUCTION	09/30/2025 EXECUTION DATE

IN ACCORDANCE WITH RESOLUTION No. 19–6, AS A RESOLUTION OF THE CITY COUNCIL OF THE CITY OF SANTA CLARITA DELEGATING DISCRETIONARY AUTHORITY TO THE DIRECTOR OF PUBLIC WORKS, DIRECTOR OF RECREATION AND COMMUNITY SERVICES, CITY ENGINEER, CITY BUILDER AND ASSISTANT CITY ENGINEERS TO APPROVE PLANS AND DESIGNS FOR THE CONSTRUCTION OF OR IMPROVEMENTS TO PUBLIC PROPERTY FOR PURPOSES OF DESIGN IMMUNITY PURSUANT TO GOVERNMENT CODE SECTION 830.6 FOR THE CITY OF SANTA CLARITA, I DO HEREBY EXERCISE THE DISCRETION VESTED IN ME BY THE AFORESAID RESOLUTION AND APPROVE THE PLAN OR BODY OF WORK OR MODIFICATION TO THE PLAN OR DESIGN, OF A CONSTRUCTION OF, OR AN IMPROVEMENT TO THE PUBLIC FACILITY, STRUCTURE, OR PROPERTY TO WHICH THIS STATEMENT, MY SIGNATURE AND DATE IS AFFIXED.

REGISTERED PROFESSIONAL ENGINEER
ZIRANG SONG
REG. #69315
Expires 06/30/26
CIVIL
STATE OF CALIFORNIA

PREPARED BY ZIRANG SONG	PROJECT ENGINEER R.C.E. NO. # 69315 EXP: 06/30/2026
DRAWN J.P	SCALE
DESIGNED J.P	
CHECKED Z.S	DATE 03/2025

TITLE **GENERAL NOTES**

C258 **NEWHALL PARK POOL**
PUMP ROOM RENOVATION
PLANS (100% CD)
SANTA CLARITA CA

SHEET **G1.1**
02 OF 61 SHEETS

JOB NO. C258

Docusign Envelope ID: F28B5F90-223C-42A7-9ED1-4868B5402361
Xrefs: C258 Titleblock.dwg
Dimscale = 1, LTscale = 1, PSltscale = 1, ACAD Ver. = 23.0s (LMS Tech), Visretain = 1
R:\C258\Engineering\C258-04 (100% CD)\sheets\C258-04 G1.1 GENERAL NOTES.dwg – Tab: 02 – by gerardorghost on 09/29/25 at 1:24:29 PM

Sep. 29, 2025

NOTE:
1. CONTRACTOR TO SECURE SITE SECURITY AT ALL TIMES WHEN REPLACING EXISTING FENCE.
2. CONSTRUCTION STAGING AREA IS NOT SHOWN ON THIS PLAN. CONTRACTOR WILL DETERMINE THE STAGING SIZE AND COORDINATE WITH THE CITY FOR SPACE REQUIRED

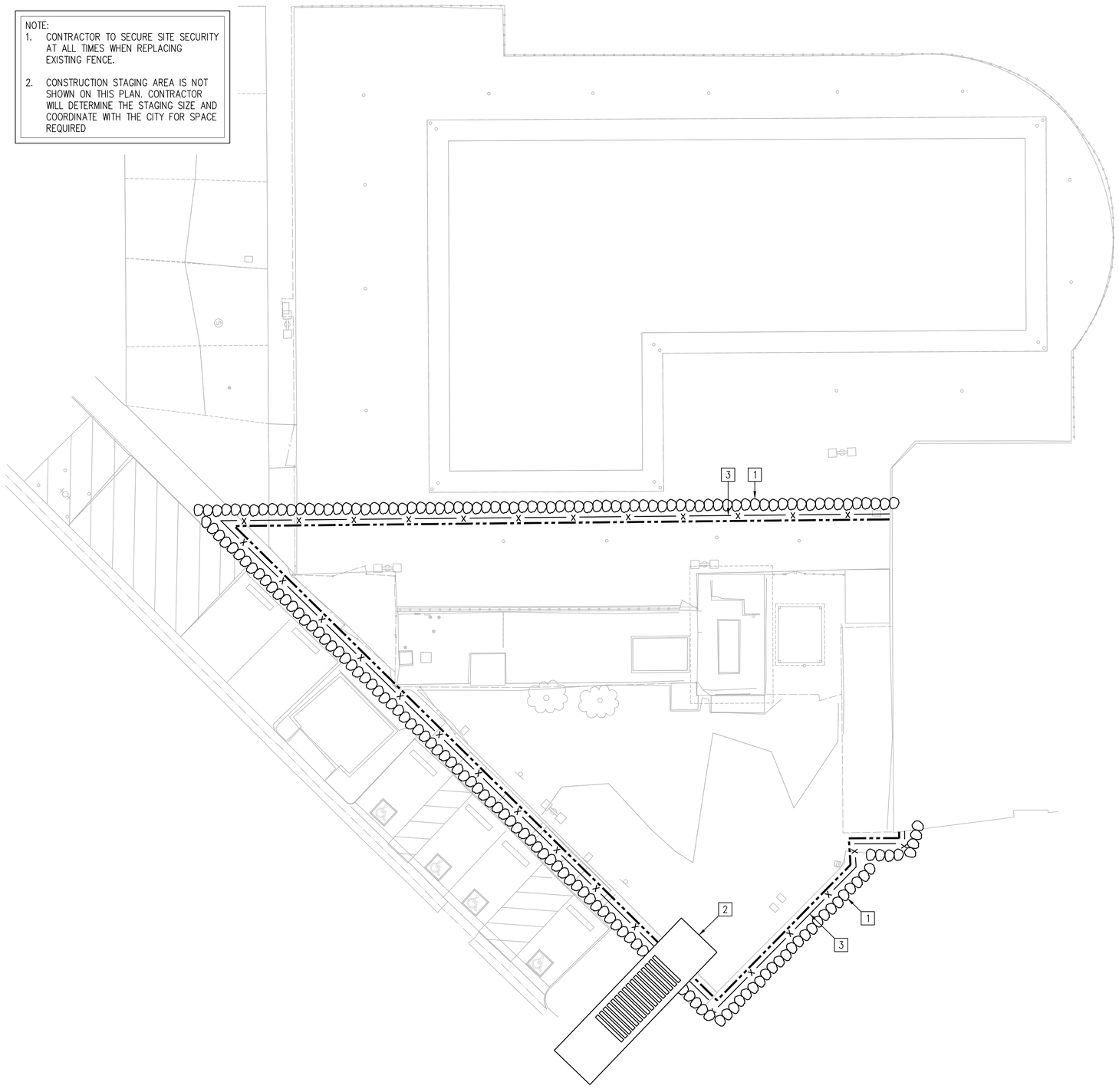

SITE PLAN
SCALE: 1"=10'-0"

EROSION CONTROL LEGENDS:

- STABILIZED CONSTRUCTION ENTRANCE
- SAND AND GRAVEL BAGS
- CONSTRUCTION FENCE AND SILT FENCE
- LIMIT OF WORK

STORM WATER POLLUTION PREVENTION NOTES:

1. EFFECTIVE COMBINATION OF EROSION AND SEDIMENT CONTROL BMP'S SHALL BE IMPLEMENTED TO PROTECT THE EXPOSED PORTIONS OF THE SITE FROM EROSION AND TO PREVENT SEDIMENT DISCHARGES.
2. SEDIMENTS AND OTHER POLLUTANTS SHALL BE RETAINED ON SITE UNTIL PROPERLY DISPOSED OF, AND MAY NOT BE TRANSPORTED FROM THE SITE VIA SHEET FLOW, SWALES, AREA DRAINS, NATURAL DRAINAGE COURSES OR WIND.
3. STOCKPILES OF EARTH AND OTHER CONSTRUCTION-RELATED MATERIALS SHALL BE PROTECTED FROM BEING TRANSPORTED FROM THE SITE BY THE FORCES OF WIND AND WATER FLOW.
4. FUELS, OILS, SOLVENTS, AND OTHER TOXIC MATERIALS SHALL BE STORED IN ACCORDANCE WITH THEIR LISTING AND ARE NOT TO CONTAMINATE THE SOIL AND SURFACE WATERS. ALL APPROVED STORAGE CONTAINERS ARE TO BE PROTECTED FROM THE WEATHER. SPILLS MUST BE CLEANED UP IMMEDIATELY AND DISPOSED OF IN A PROPER MANNER. SPILLS MAY NOT BE WASHED INTO THE DRAINAGE SYSTEM, NOR BE ALLOWED TO SETTLE OR INFILTRATE INTO SOIL.
5. EXCESS OR WASTE CONCRETE MAY NOT BE WASHED INTO THE PUBLIC WAY OR ANY OTHER DRAINAGE SYSTEM. PROVISIONS SHALL BE MADE TO RETAIN CONCRETE WASTES ON SITE UNTIL THEY CAN BE DISPOSED OF AS SOLID WASTES.
6. TRASH AND CONSTRUCTION SOLID WASTES SHALL BE DEPOSITED INTO A COVERED RECEPTACLE TO PREVENT CONTAMINATION OF RAINWATER AND DISPERSAL BY WIND.
7. SEDIMENTS AND OTHER MATERIALS MAY NOT BE TRACKED FROM THE SITE BY VEHICULAR TRAFFIC. THE CONSTRUCTION ENTRANCE ROADWAYS MUST BE STABILIZED SO AS TO INHIBIT SEDIMENTS FROM BEING DEPOSITED INTO THE PUBLIC WAY. ACCIDENTAL DEPOSITS SHALL BE SWEPT UP IMMEDIATELY AND MAY NOT BE WASHED DOWN BY RAIN OR OTHER MEANS.
8. STORM WATER POLLUTION PREVENTION DEVICES AND / OR PRACTICES SHALL BE MODIFIED AS NEEDED AS THE PROJECT PROGRESSES TO ENSURE EFFECTIVENESS.
9. SUPPLY WATER FOR WHEEL WASHING
10. STORM DRAIN TO BE BLOCKED OFF AND PROTECTED DURING CONSTRUCTION TO PREVENT SITE DEBRIS FROM ENTERING THE STORM DRAIN.

EROSION CONTROL KEYNOTES:

1. INSTALL GRAVEL BAG BARRIER PER CASQA BMP SE-6
2. INSTALL STABILIZED CONSTRUCTION ENTRANCE/EXIT PER CASQA BMP TC-1
3. INSTALL SILT FENCE PER CASQA BMP SE-1

NORTH

10 5 0 10 20

CITY OF SANTA CLARITA
BUILDING & SAFETY
APPROVED
Under SCMC Titles 18, 19, 20, 21, 24, 25
Sep 16, 2025
F. Svendsen
BLD25-00576 (ARCH)
The approved plans must be available at the construction site at all times. Changes or alterations to approved plans shall not be made without written permission from the City of Santa Clarita Building & Safety Division. The approval of these plans shall not be construed to permit or approve any violation of the applicable codes, ordinances, or other laws.

PACE
Advanced Water Engineering
17520 Newhope Street, Suite 200 | Fountain Valley, CA 92708
P: (714) 481-7300 | www.pacewater.com

REVIEWED BY: 09/30/2025
PM-DESIGN EXECUTION DATE

REVIEWED BY: 09/30/2025
PM-CONSTRUCTION EXECUTION DATE

IN ACCORDANCE WITH RESOLUTION No. 19-6, AS A RESOLUTION OF THE CITY COUNCIL OF THE CITY OF SANTA CLARITA DELEGATING DISCRETIONARY AUTHORITY TO THE DIRECTOR OF PUBLIC WORKS, DIRECTOR OF RECREATION AND COMMUNITY SERVICES, DIRECTOR OF NEIGHBORHOOD SERVICES, CITY ENGINEER, AND ASSISTANT CITY ENGINEERS TO APPROVE PLANS AND DESIGNS FOR THE CONSTRUCTION OF OR IMPROVEMENTS TO PUBLIC PROPERTY FOR PURPOSES OF DESIGN IMMUNITY PURSUANT TO GOVERNMENT CODE SECTION 830.6 FOR THE CITY OF SANTA CLARITA, I DO HEREBY EXERCISE THE DISCRETION DELEGATED TO ME AND APPROVE THE PLAN OR DESIGN, OR AMENDMENT OR MODIFICATION TO THE PLAN OR DESIGN, OR A CONSTRUCTION OF, OR AN IMPROVEMENT TO THE PUBLIC FACILITY, STRUCTURE, OR PROPERTY TO WHICH THIS STATEMENT, MY SIGNATURE AND DATE IS AFFIXED.

REGISTERED PROFESSIONAL ENGINEER
ZIRANG SONG
REG. #69315
Expires 06/30/26
CIVIL
STATE OF CALIFORNIA

PREPARED BY
ZIRANG SONG
PROJECT ENGINEER
R.C.E. NO. # 69315
EXP. 06/30/2026

DATE	SCALE
03/2025	

DRAWN	DESIGNED	CHECKED
J.P.	J.P.	Z.S.

TITLE
EROSION CONTROL AND FENCING PLAN

C258
NEWHALL PARK POOL
PUMP ROOM RENOVATION
PLANS (100% CD)
SANTA CLARITA CA

SHEET G1.2
03 OF 61 SHEETS

JOB NO. C258

R:\C258\Engineering\C258-04 (100% CD)\sheets\C258-04 G1.2 EROSION, CONTROL, AND FENCING PLAN.dwg - Tab: 03 - by jenderprost on 09/29/25 at 1:24:18 PM

Xrefs: C258 Titleblock.dwg; C258 Survey Basefile.dwg
Dimscale = 1; LTscale = 1; PSltscale = 1; ACAD Ver. = 23.0s (LMS Tech); Viewtab = 1

Docusign Envelope ID: F28B5F90-220C-42A7-9ED1-4B9B9540381

Sep. 29, 2025

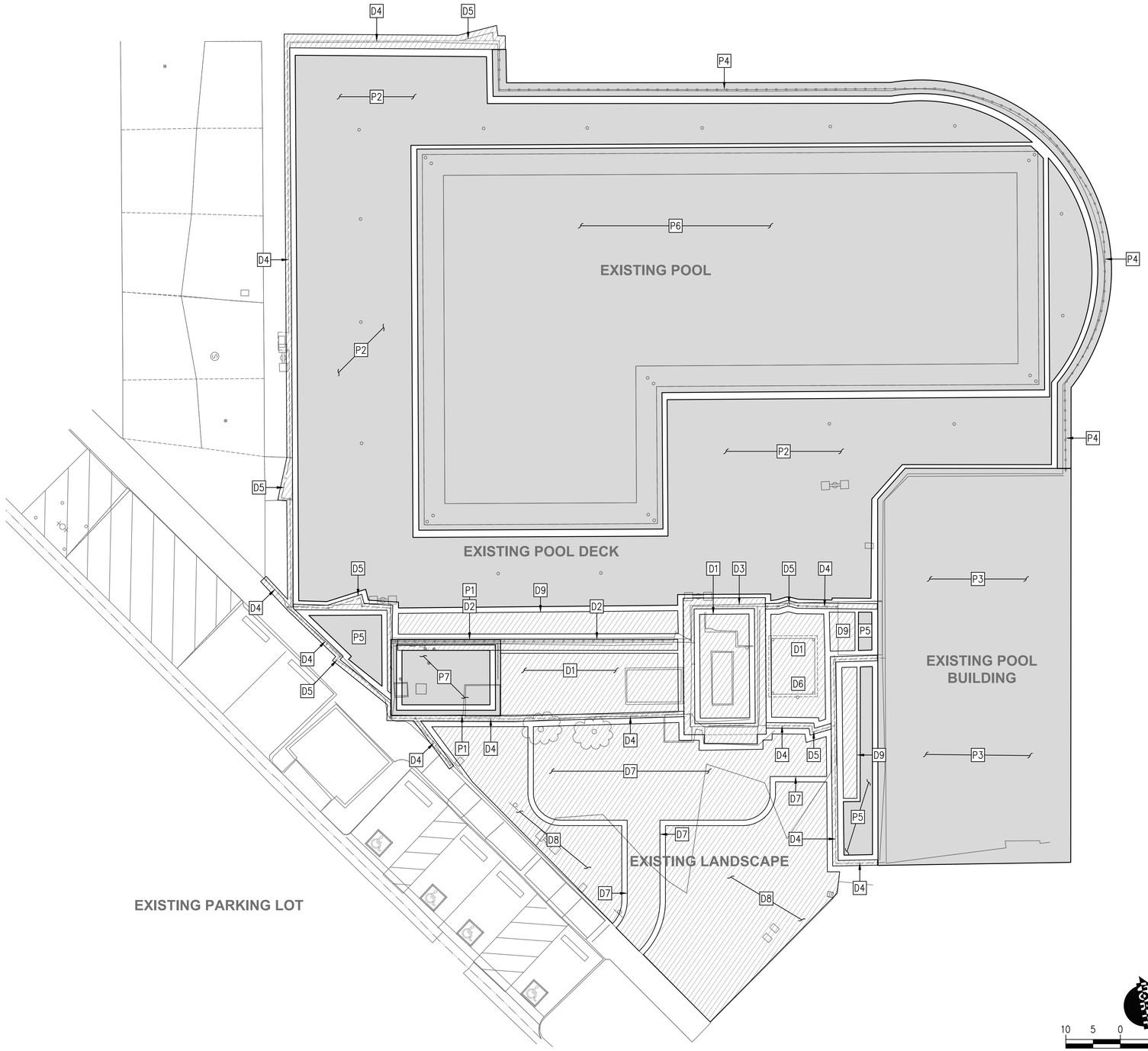

SITE PLAN
SCALE: 1"=10'-0"

DEMOLITION GENERAL NOTES:

1. CONTRACTOR IS RESPONSIBLE FOR VERIFICATION OF DEMOLITION ITEMS, PROTECT IN PLACE ITEMS AND QUANTITY PRIOR TO START OF CONSTRUCTION WITH OWNER AND/OR OWNER'S REPRESENTATIVE. AS SHOWN ON THE DEMO PLANS.
2. CONTRACTOR TO COORDINATE WITH OWNER OR OWNER'S REPRESENTATIVES FOR ITEMS TO BE DEMOLISHED.
3. CONTRACTOR TO DISPOSE OF DEBRIS OFF-SITE.
4. CONTRACTOR TO REPLACE ANY ITEMS DAMAGED OR REMOVED THAT WAS NOT SPECIFICALLY IDENTIFIED IN THIS PLAN.
5. DEMOLITION AND PROTECT-IN-PLACE OUTLINES ARE PROVIDED TO DIAGRAMATICALLY SHOW THE DEMOLITION/PROTECT-IN-PLACE ITEMS. CONTRACTOR SHALL VERIFY DIMENSIONS AND EXACT LOCATIONS PRIOR TO START OF CONSTRUCTION. PLEASE INFORM OWNER AND/OR OWNER'S REPRESENTATIVE OF ANY DISCREPANCIES PRIOR TO START OF DEMOLITION.
6. CONTRACTOR TO REMOVE ALL POOL SIGNAGE THAT IS ATTACHED TO THE EXISTING BUILDING AND WALLS BEING DEMOLISHED, SAVE IT, AND REINSTALL AFTER THE BUILDING HAS BEEN CONSTRUCTED.
7. CONTRACTOR TO NOTIFY ENGINEER PRIOR TO EXISTING BUILDING FOOTING DEMOLITION FOR REVIEW.

DEMOLITION LEGENDS:

ITEM TO BE DEMOLISHED

ITEM TO PROTECT-IN-PLACE

ITEM TO REMOVE AND REUSE

PROTECT-IN-PLACE KEYNOTES:

P1 PROTECT-IN-PLACE EXISTING WET WELL WALLS
P2 PROTECT-IN-PLACE EXISTING POOL DECK
P3 PROTECT-IN-PLACE EXISTING BOYS AND GIRLS CLUB BUILDING
P4 PROTECT-IN-PLACE EXISTING WROUGHT IRON FENCE
P5 PROTECT-IN-PLACE EXISTING CONCRETE SLAB
P6 PROTECT-IN-PLACE EXISTING POOL
P7 PROTECT-IN-PLACE EXISTING WET WELL SLAB

DEMOLITION KEYNOTES:

D1 DEMOLISH EXISTING PUMP ROOM CONCRETE SLAB
D2 DEMOLISH EXISTING PUMP ROOM WALL AND ASSOCIATED FOOTING
D3 DEMOLISH EXISTING PUMP ROOM BUILDING (INCLUDING ROOF, CMU WALL, FOOTINGS, ETC.)
D4 DEMOLISH EXISTING CHAIN-LINK FENCE
D5 DEMOLISH EXISTING GATE
D6 DEMOLISH EXISTING ROOF AND ASSOCIATED STRUCTURE AND FOOTINGS
D7 DEMOLISH EXISTING LANDSCAPE AREA FOR NEW BUILDING AND PATH
D8 DEMOLISH EXISTING LANDSCAPE TO BE REGRADED PER SHEET C2.0
D9 DEMOLISH EXISTING CONCRETE DECK FOR NEW CONSTRUCTION PER STRUCTURAL PLANS

CITY OF SANTA CLARITA
BUILDING & SAFETY
APPROVED
Under SCMC Titles 18, 19, 20, 21, 24, 25
Sep 16, 2025
F. Svendsen
BLD25-00576 (ARCH)
The approved plans must be available at the construction site at all times. Changes or alterations to approved plans shall not be made without written permission from the City of Santa Clarita Building & Safety Division. The approval of these plans does not permit the violation of any applicable state or local laws, ordinances, or other laws.

PACE
Advanced Water Engineering
17520 Newhope Street, Suite 200 | Fountain Valley, CA 92708
P: (714) 481-7300 | www.pacewater.com

REVIEWED BY:		
Luis Trujillo	09/30/2025	
PM - DESIGN	EXECUTION DATE	
REVIEWED BY:		
	09/30/2025	
PM - CONSTRUCTION	EXECUTION DATE	

IN ACCORDANCE WITH RESOLUTION No. 19-6, AS A RESOLUTION OF THE CITY COUNCIL OF THE CITY OF SANTA CLARITA DELEGATING DISCRETIONARY AUTHORITY TO THE DIRECTOR OF NEIGHBORHOOD SERVICES, DIRECTOR OF RECREATION AND PARKS, ASSISTANT CITY ENGINEER, CHIEF BUILDING OFFICIAL, CITY ENGINEER, AND ASSISTANT CITY ENGINEERS TO APPROVE PLANS AND DESIGNS FOR THE CONSTRUCTION OF OR IMPROVEMENTS TO PUBLIC PROPERTY FOR PURPOSES OF DESIGN IMMUNITY PURSUANT TO GOVERNMENT CODE SECTION 830.6 FOR THE CITY OF SANTA CLARITA, I DO HEREBY EXERCISE THE DISCRETION DELEGATED TO ME AND APPROVE THE PLAN, DESIGN, PARAMETER, OR MODIFICATION TO THE PLAN OR DESIGN, OR A CONSTRUCTION OF, OR AN IMPROVEMENT TO THE PUBLIC FACILITY, STRUCTURE, OR PROPERTY TO WHICH THIS STATEMENT, MY SIGNATURE AND DATE IS AFFIXED.

REGISTERED PROFESSIONAL ENGINEER
ZIRANG SONG
REG. #69315
Expires 06/30/26
CIVIL
STATE OF CALIFORNIA

PREPARED BY ZIRANG SONG		
PROJECT ENGINEER		
R.C.E. NO. # 69315		
EXP. 06/30/2026		
DRAWN J.P	SCALE	
DESIGNED J.P		DATE 03/2025
CHECKED Z.S		

TITLE **SITE DEMOLITION PLAN**

C258 **NEWHALL PARK POOL**
PUMP ROOM RENOVATION
PLANS (100% CD)
SANTA CLARITA CA

SHEET **D1.0**
04 OF 61 SHEETS

JOB NO. C258

Docusign Envelope ID: F28B6F9D-223C-42A7-9ED1-4686B6540381
Xrefs: C258 Titleblock.dwg, C258 Survey Basefile.dwg, Demolition Plan.dwg
Dimscale = 1, LTscale = 1, PSltscale = 1, ACAD Ver. = 23.0s (LMS Tech), Visretain = 1
R:\C258\Engineering\C258-04 (100% CD)\sheets\C258-04 D1.0 SITE DEMOLITION PLAN.dwg - Tab: D4 - by jenderengtuat on 09/29/25 at 3:52:14 PM

Sep. 29, 2025

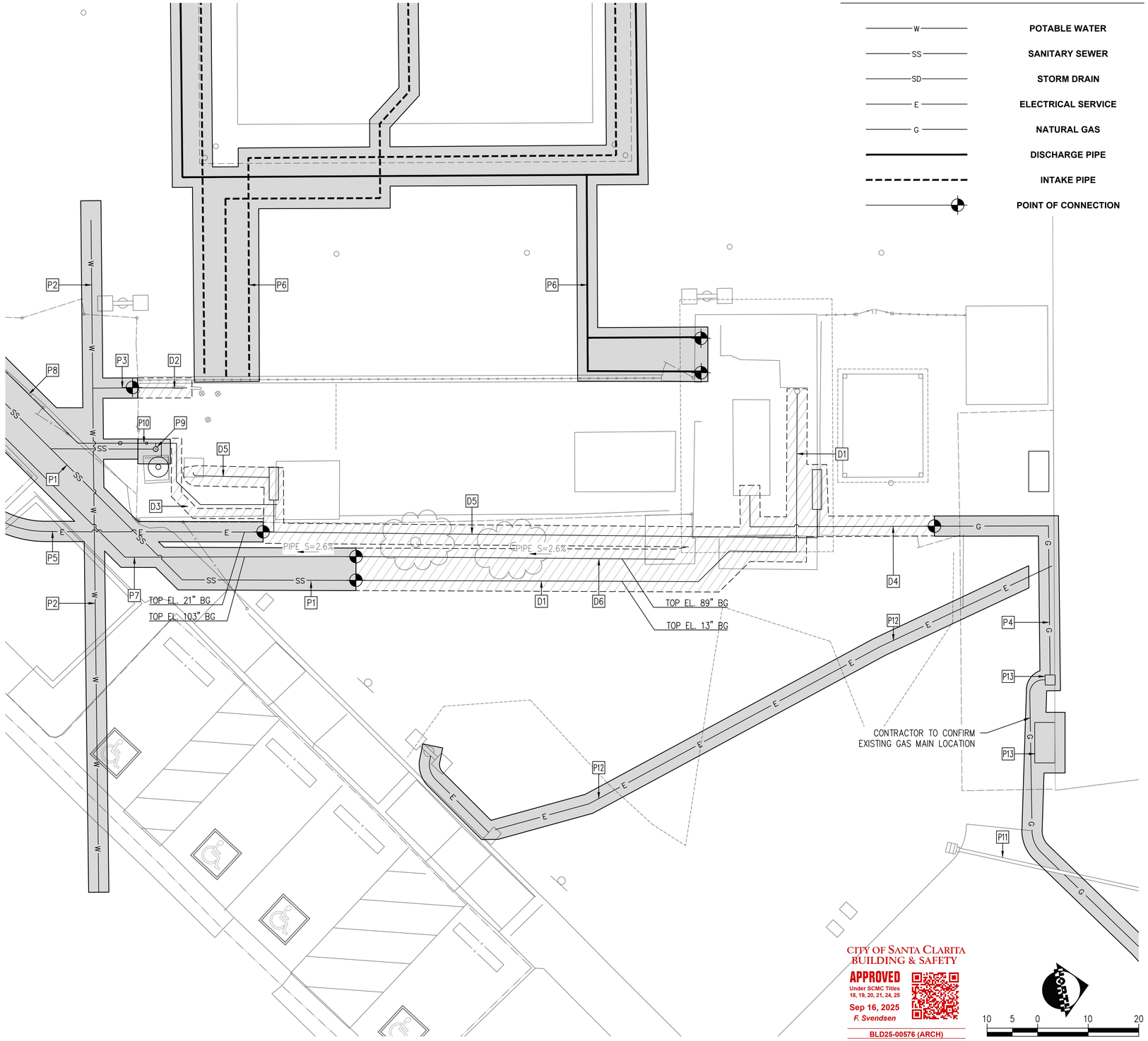

SITE PLAN

SCALE: 1"=10'-0"

LEGEND:

—W—	POTABLE WATER
—SS—	SANITARY SEWER
—SD—	STORM DRAIN
—E—	ELECTRICAL SERVICE
—G—	NATURAL GAS
	DISCHARGE PIPE
	INTAKE PIPE
	POINT OF CONNECTION

DEMOLITION GENERAL NOTES:

1. CONTRACTOR IS RESPONSIBLE FOR VERIFICATION OF DEMOLITION ITEMS, PROTECT IN PLACE ITEMS AND QUANTITY PRIOR TO START OF CONSTRUCTION WITH OWNER AND/OR OWNER'S REPRESENTATIVE. AS SHOWN ON THE DEMO PLANS.
2. CONTRACTOR TO COORDINATE WITH OWNER OR OWNER'S REPRESENTATIVES FOR ITEMS TO BE DEMOLISHED.
3. CONTRACTOR TO DISPOSE OF DEBRIS OFF-SITE.
4. CONTRACTOR TO REPLACE ANY ITEMS DAMAGED OR REMOVED THAT WAS NOT SPECIFICALLY IDENTIFIED IN THIS PLAN.
5. ALL PIPE LOCATIONS SHOWN ARE APPROXIMATE. CONTRACTOR TO VERIFY ACTUAL LOCATION AND TIE-IN ELEVATIONS AND NOTIFY OWNER AND/OR OWNER'S REPRESENTATIVE.
6. ANY PIPE/CONDUITS/WIRES NOT SHOWN SHALL BE PROTECTED IN PLACE. CONTRACTOR TO SUBMIT RFI AND NOTIFY OWNER AND/OR OWNER'S REPRESENTATIVE SO THE CORRECT COURSE OF ACTION CAN BE DETERMINED
7. BEFORE DEMOLITION, CONTRACTOR SHALL CONFIRM ALL UTILITIES (I.E. GAS, POWER, WATER, ETC.) ARE ALL TURNED OFF.

DEMOLITION LEGENDS:

ITEM TO BE DEMOLISHED	
ITEM TO PROTECT-IN-PLACE	
ITEM TO REMOVE AND REUSE	

PROTECT-IN-PLACE KEYNOTES:

- P1 PROTECT-IN-PLACE EXISTING 3" SEWER LINE
- P2 PROTECT-IN-PLACE EXISTING 3" WATER LINE
- P3 PROTECT-IN-PLACE EXISTING 2" WATER LINE
- P4 PROTECT-IN-PLACE EXISTING GAS LINE
- P5 PROTECT-IN-PLACE EXISTING ELECTRICAL LINE FOR BACKWASH SUMP PUMP
- P6 PROTECT-IN-PLACE EXISTING 8" POOL PIPING
- P7 PROTECT-IN-PLACE EXISTING 10"VCP GRAVITY LINE
- P8 PROTECT-IN-PLACE EXISTING 2" PRESSURIZED BACKWASH LINE TO BACKWASH FILTER
- P9 PROTECT-IN-PLACE EXISTING WASTE STANDPIPE
- P10 PROTECT-IN-PLACE EXISTING 2" PRESSURIZED BACKWASH LINE TO BACKWASH FILTER
- P11 PROTECT-IN-PLACE EXISTING 4" STORM DRAIN PIPE
- P12 PROTECT-IN-PLACE EXISTING STREET LIGHT LINE, CONTRACTOR TO DETERMINE EXACT LOCATION.
- P13 PROTECT-IN-PLACE EXISTING GAS HEATER AND GAS METER, CONTRACTOR TO DETERMINE EXACT LOCATION.

DEMOLITION KEYNOTES:

- D1 DEMOLISH EXISTING 3" SEWER LINE AND ASSOCIATED CLEANOUTS
- D2 DEMOLISH EXISTING 2" WATER LINE
- D3 DEMOLISH EXISTING 2" PRESSURIZED BACKWASH LINE TO EXISTING WET WELL
- D4 DEMOLISH EXISTING GAS LINE
- D5 DEMOLISH EXISTING ELECTRICAL WIRING AND CONDUITS
- D6 DEMOLISH EXISTING 10" VCP GRAVITY BACKWASH LINE

CITY OF SANTA CLARITA
BUILDING & SAFETY
APPROVED
Under SCMC Titles 18, 19, 20, 21, 24, 25
Sep 16, 2025
F. Svendsen
BLD25-00576 (ARCH)
The approved plans must be available at the construction site at all times. Changes or alterations to approved plans shall not be made without written permission from the City of Santa Clarita Building & Safety Division. The approval of these plans shall not be construed to permit or approve any violation of the applicable codes, ordinances, or other laws.

NORTH

10 5 0 10 20

PACE
Advanced Water Engineering
17520 Newhope Street, Suite 200 | Fountain Valley, CA 92708
P: (714) 481-7300 | www.pacewater.com

REVIEWED BY:	09/30/2025
PM - DESIGN	EXECUTION DATE
REVIEWED BY:	09/30/2025
PM - CONSTRUCTION	EXECUTION DATE

IN ACCORDANCE WITH RESOLUTION No. 19-6, AS A RESOLUTION OF THE CITY COUNCIL OF THE CITY OF SANTA CLARITA DELEGATING DISCRETIONARY AUTHORITY TO THE DIRECTOR OF PUBLIC WORKS, DIRECTOR OF RECREATION AND COMMUNITY SERVICES, DIRECTOR OF NEIGHBORHOOD SERVICES, CITY ENGINEER, AND ASSISTANT CITY ENGINEERS TO APPROVE PLANS AND DESIGNS FOR THE CONSTRUCTION OF OR IMPROVEMENTS TO PUBLIC PROPERTY FOR PURPOSES OF DESIGN IMMUNITY PURSUANT TO GOVERNMENT CODE SECTION 830.6 FOR THE CITY OF SANTA CLARITA, I DO HEREBY EXERCISE THE DISCRETION DELEGATED TO ME AND APPROVE THE PLAN, DESIGN, IMPROVEMENT OR MODIFICATION TO THE PLAN OR DESIGN, OR A CONSTRUCTION OF, OR AN IMPROVEMENT TO THE PUBLIC FACILITY, STRUCTURE, OR PROPERTY TO WHICH THIS STATEMENT, MY SIGNATURE AND DATE IS AFFIXED.

REGISTERED PROFESSIONAL ENGINEER
ZIRANG SONG
REG. #69315
Expires 06/30/26
CIVIL
STATE OF CALIFORNIA

PREPARED BY	
ZIRANG SONG	PROJECT ENGINEER
R.C.E. NO.	# 69315
EXP.	06/30/2026
DRAWN J.P	SCALE
DESIGNED J.P	
CHECKED Z.S	DATE 03/2025

TITLE **UTILITY DEMOLITION PLAN**

C258 **NEWHALL PARK POOL**
PUMP ROOM RENOVATION
PLANS (100% CD)
SANTA CLARITA CA

SHEET **D2.0**
05 OF 61 SHEETS

JOB NO. C258

Docusign Envelope ID: F28B5F90-223C-42A7-9ED7-46868B540381
Xrefs: Existing Utilities.dwg; Demolition Plan.dwg; C258 Survey Base.dwg; C258 Titleblock.dwg
Dmscale = 1; L'Iscale = 1; PSlscale = 1; ACAD Ver. = 23.0s (LMS Tech); Visretain = 1
R:\C258\Engineering\C258-04 (100% CD)\sheets\C258-04 D2.0 UTILITY DEMOLITION PLAN.dwg - Tab: D5 - by jenderegnat on 09/29/25 at 3:52:05 PM

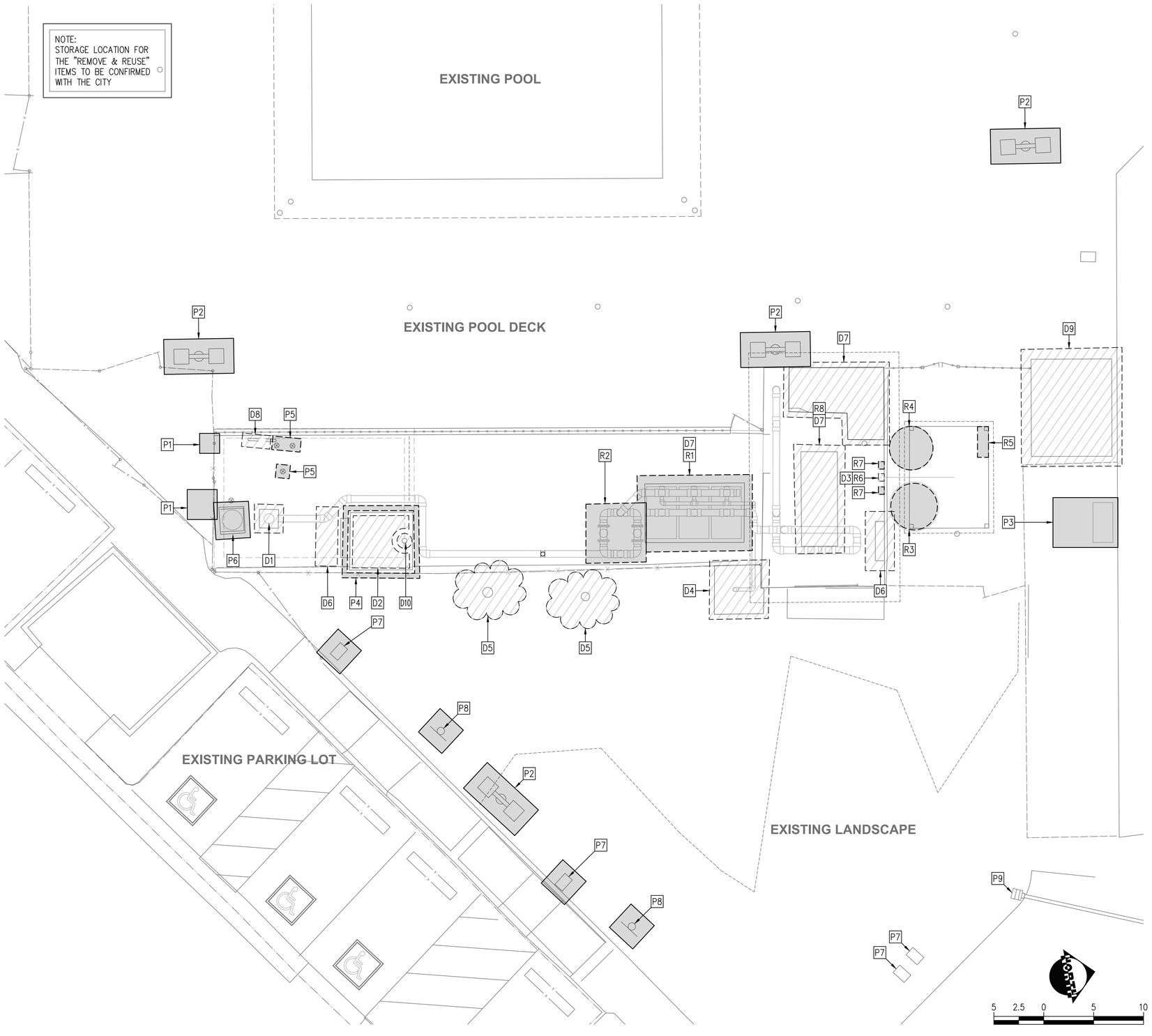

SITE PLAN

SCALE: 1"=5'-0"

DEMOLITION GENERAL NOTES:

1. CONTRACTOR IS RESPONSIBLE FOR VERIFICATION OF DEMOLITION ITEMS, REMOVE AND REUSE ITEMS, PROTECT IN PLACE ITEMS AND QUANTITY PRIOR TO START OF CONSTRUCTION WITH OWNER AND/OR OWNER'S REPRESENTATIVE. AS SHOWN ON THE DEMO PLANS.
2. CONTRACTOR TO COORDINATE WITH OWNER OR OWNER'S REPRESENTATIVES FOR ITEMS TO BE DEMOLISHED.
3. CONTRACTOR TO DISPOSE OF DEBRIS OFF-SITE.
4. CONTRACTOR TO REPLACE ANY ITEMS DAMAGED OR DEMOLISH THAT WAS NOT SPECIFICALLY IDENTIFIED IN THIS PLAN.
5. ALL MECHANICAL PIPING TO BE DEMOLISHED AND DEMOLISH

DEMOLITION LEGENDS:

ITEM TO BE DEMOLISHED

ITEM TO PROTECT-IN-PLACE

ITEM TO REMOVE AND REUSE

REMOVE RELOCATE, AND REUSE KEYNOTES:

- R1 REMOVE AND REUSE EXISTING POOL FILTER
- R2 REMOVE AND REUSE EXISTING BASKET STRAINER
- R3 REMOVE AND REUSE EXISTING 500 GAL CHLORINE TANK
- R4 REMOVE AND REUSE EXISTING 350 GAL ACID TANK
- R5 REMOVE AND REUSE EXISTING EYE WASH STATION
- R6 REMOVE AND REUSE EXISTING STENNER 85M
- R7 REMOVE AND REUSE EXISTING STENNER 45M
- R8 REMOVE AND REUSE EXISTING POOL HEATER

PROTECT-IN-PLACE KEYNOTES:

- P1 PROTECT IN PLACE EXISTING VALVE VAULT AND PANEL
- P2 PROTECT IN PLACE EXISTING LIGHT
- P3 PROTECT IN PLACE EXISTING TRANSFORMER
- P4 PROTECT IN PLACE EXISTING RAISED CONCRETE WET WELL WALLS
- P5 PROTECT IN PLACE EXISTING VALVES
- P6 PROTECT IN PLACE EXISTING HOUSEKEEPING PAD
- P7 PROTECT IN PLACE EXISTING VALVE BOX
- P8 PROTECT IN PLACE EXISTING HANDICAP SIGN
- P9 PROTECT IN PLACE EXISTING STORM DRAIN INLET

DEMOLITION KEYNOTES:

- D1 DEMOLISH EXISTING VERTICAL TURBINE PUMP
- D2 DEMOLISH EXISTING ACCESS HATCH
- D3 DEMOLISH EXISTING CHEMICAL CONTROLLER
- D4 DEMOLISH EXISTING BACKWASH PIT
- D5 DEMOLISH EXISTING TREES (2)
- D6 DEMOLISH EXISTING ELECTRICAL PANEL
- D7 DEMOLISH EXISTING HOUSEKEEPING PAD
- D8 DEMOLISH EXISTING WATER FILL
- D9 DEMOLISH EXISTING STORAGE SHED
- D10 DEMOLISH EXISTING FLOAT SENSOR

CITY OF SANTA CLARITA
BUILDING & SAFETY
APPROVED
Under SCMC Titles 18, 19, 20, 21, 24, 25
Sep 16, 2025
F. Svendsen
BLD25-00576 (ARCH)
The approved plans must be available at the construction site at all times. Changes or alterations to approved plans shall not be made without written permission from the City of Santa Clarita Building & Safety Division. The approval of these plans shall not be construed to permit or approve any violation of the applicable codes, ordinances, or other laws.

PACE
Advanced Water Engineering
17520 Newhope Street, Suite 200 | Fountain Valley, CA 92708
P: (714) 481-7300 | www.pacewater.com

REVIEWED BY: 09/30/2025
PM-DESIGN EXECUTION DATE

REVIEWED BY: 09/30/2025
PM-CONSTRUCTION EXECUTION DATE

IN ACCORDANCE WITH RESOLUTION No. 19-6, AS A RESOLUTION OF THE CITY COUNCIL OF THE CITY OF SANTA CLARITA DELEGATING DISCRETIONARY AUTHORITY TO THE DIRECTOR OF PUBLIC WORKS, DIRECTOR OF RECREATION AND COMMUNITY SERVICES, DIRECTOR OF NEIGHBORHOOD SERVICES, CITY ENGINEER, AND ASSISTANT CITY ENGINEERS TO APPROVE PLANS AND DESIGNS FOR THE CONSTRUCTION OF OR IMPROVEMENTS TO PUBLIC PROPERTY FOR PURPOSES OF DESIGN IMMUNITY PURSUANT TO GOVERNMENT CODE SECTION 830.6 FOR THE CITY OF SANTA CLARITA, I DO HEREBY EXERCISE THE DISCRETION DELEGATED TO ME AND APPROVE THE PLAN OR DESIGN, AMENDMENT OR MODIFICATION TO THE PLAN OR DESIGN, OR A CONSTRUCTION OF, OR AN IMPROVEMENT TO THE PUBLIC FACILITY, STRUCTURE, OR PROPERTY TO WHICH THIS STATEMENT, MY SIGNATURE AND DATE IS AFFIXED.

REGISTERED PROFESSIONAL ENGINEER
ZIRANG SONG
REG. #69315
Expires 06/30/26
CIVIL
STATE OF CALIFORNIA

PREPARED BY
ZIRANG SONG
PROJECT ENGINEER
R.C.E. NO. # 69315
EXP: 06/30/2026

DRAWN	SCALE	DATE
J.P.		03/2025
DESIGNED		
J.P.		
CHECKED		
Z.S.		

TITLE
MECHANICAL DEMOLITION PLAN

C258
NEWHALL PARK POOL
PUMP ROOM RENOVATION PLANS (100% CD)
SANTA CLARITA CA

SHEET
D3.0
06 OF 61 SHEETS

JOB NO. C258

Sep. 29, 2025
Docusign Envelope ID: F28B5F90-220C-42A7-9ED1-4B8B8B540381
Xrefs: C258_Survey Baseflle.dwg; Demolition Plan.dwg; Existing Layout.dwg; C258_Titleblock.dwg
Dimscale = 1; LTscale = 1; PSltscale = 1; ACAD Ver. = 23.0s (LMS Tech); Viewtoan = 1
R:\C258\Engineering\C258-04 (100% CD)\sheets\C258-04 D3.0 MECHANICAL DEMOLITION PLAN.dwg - Tab: D6 - by jenderegnat on 09/29/25 at 3:36:55 PM

Sep. 29, 2025

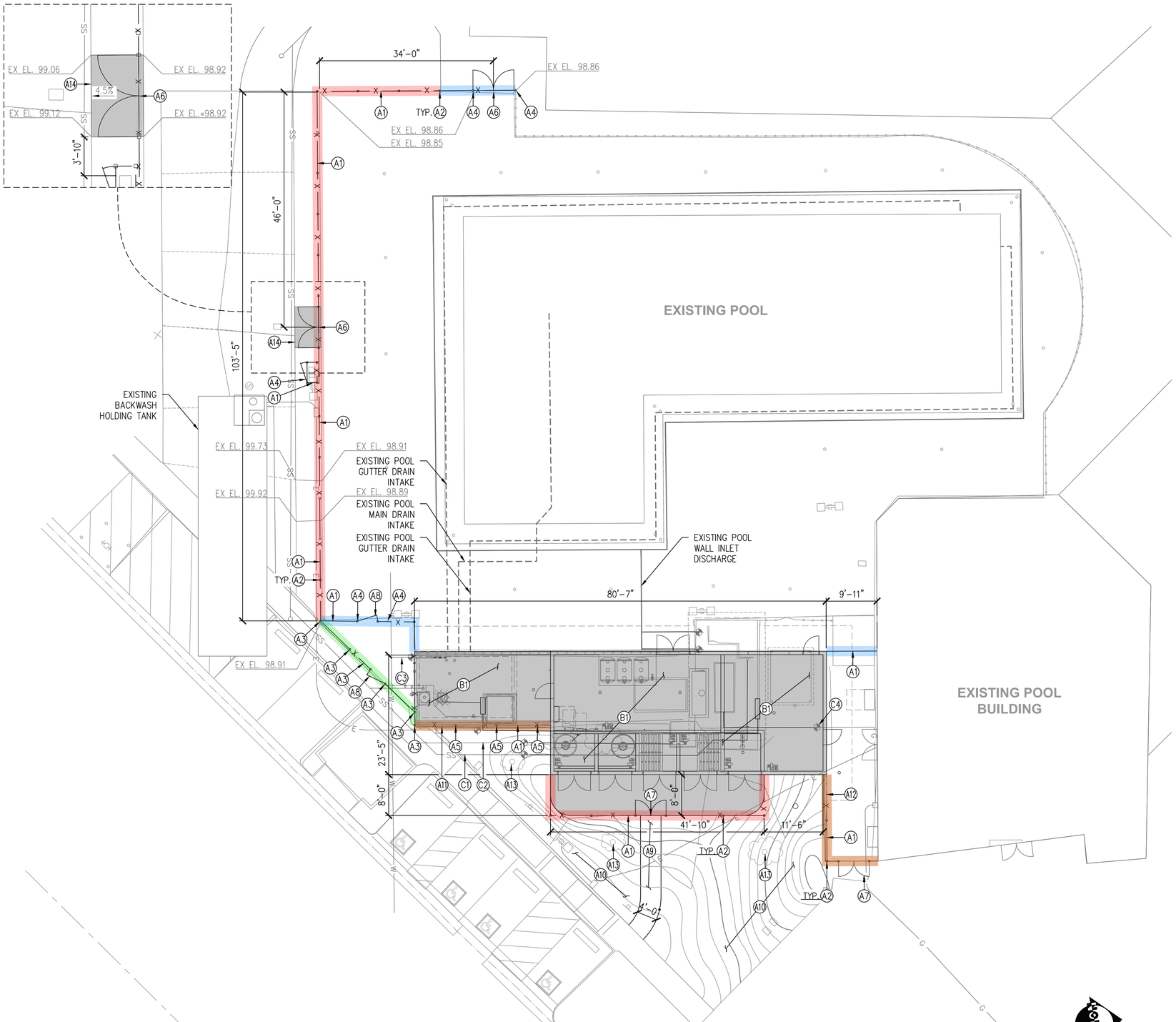

SITE PLAN

SCALE: 1"=10'-0"

CONSTRUCTION NOTES

NEW LANDSCAPE FEATURES

- (A1) INSTALL NEW 8'-0" WROUGHT-IRON FENCE PER DETAIL A SHEET C3.0
- (A2) INSTALL NEW 8'-0" TALL 4" SQUARE 12 GA POST PER DETAIL B SHEET C3.2
- (A3) INSTALL NEW 8'-0" TALL 4" SQUARE 12 GA POST PER DETAIL C SHEET C3.2
- (A4) INSTALL NEW 8'-0" TALL 4" SQUARE 12 GA POST PER DETAIL E SHEET C3.2
- (A5) INSTALL NEW 8'-0" TALL 4" SQUARE 12 GA POST PER DETAIL F SHEET C3.2
- (A6) INSTALL NEW DOUBLE-DOOR, SELF-LATCHING GATE PER DETAIL D SHEET C3.0
- (A7) INSTALL NEW DOUBLE-DOOR GATE PER DETAIL C SHEET C3.0
- (A8) INSTALL NEW SINGLE-DOOR GATE PER DETAIL E SHEET C3.0
- (A9) INSTALL NEW CONCRETE ACCESS WALKWAY PER DETAIL 10 SHEET S0.4
- (A10) REGRADE LANDSCAPE AREA PER SHEET C2.0
- (A11) INSTALL NEW CONTAINMENT WALL PER DETAIL 5 SHEET S2.1
- (A12) INSTALL NEW 6" CURB PER DETAIL 7 SHEET S2.1
- (A13) INSTALL NEW TREE
- (A14) INSTALL NEW CONCRETE ACCESS ROAD PER DETAIL A SHEET C3.2

NEW PUMP ROOM CONSTRUCTION

- (B1) INSTALL NEW PUMP ROOM BUILDING PER STRUCTURAL PLANS, ARCHITECTURAL PLANS

EXISTING UTILITIES

- (C1) EXISTING 3" SEWER LINE TO CONNECT TO NEW PUMP ROOM FLOOR DRAINS PER SHEET M2.1
- (C2) EXISTING 10" VCP BACKWASH GRAVITY LINE TO CONNECT TO FILTER BACKWASH PER SHEET M2.1
- (C3) EXISTING 2" WATER LINE TO CONNECT TO POOL FILL SYSTEM PER SHEET M2.1
- (C4) EXISTING GAS LINE TO CONNECT TO POOL HEATER

LEGEND:

- WROUGHT-IRON POST PER DETAIL B SHEET C3.1
- WROUGHT-IRON POST PER DETAIL C SHEET C3.1
- WROUGHT-IRON POST PER DETAIL E SHEET C3.1
- WROUGHT-IRON POST PER DETAIL F SHEET C3.1

CITY OF SANTA CLARITA BUILDING & SAFETY
APPROVED
Under SCMC Titles 18, 19, 20, 21, 24, 25
Sep 16, 2025
F. Svendsen
BLD25-00576 (ARCH)
The approved plans must be available at the construction site at all times. Changes or alterations to approved plans shall not be made without written permission from the City of Santa Clarita Building & Safety Division. The approval of these plans shall not be construed to permit or approve any violation of the applicable codes, ordinances, or other laws.

PACE
Advanced Water Engineering
17520 Newhope Street, Suite 200 | Fountain Valley, CA 92708
P: (714) 481-7300 | www.pacewater.com

REVIEWED BY: PM-DESIGN	09/30/2025 EXECUTION DATE
REVIEWED BY: PM-CONSTRUCTION	09/30/2025 EXECUTION DATE

IN ACCORDANCE WITH RESOLUTION No. 19-6, AS A RESOLUTION OF THE CITY COUNCIL OF THE CITY OF SANTA CLARITA DELEGATING DISCRETIONARY AUTHORITY TO THE DIRECTOR OF PUBLIC WORKS, DIRECTOR OF RECREATION AND COMMUNITY SERVICES, DIRECTOR OF NEIGHBORHOOD SERVICES, CITY ENGINEER, AND ASSISTANT CITY ENGINEERS TO APPROVE PLANS AND DESIGNS FOR THE CONSTRUCTION OF OR IMPROVEMENTS TO PUBLIC PROPERTY FOR PURPOSES OF DESIGN IMMUNITY PURSUANT TO GOVERNMENT CODE SECTION 830.6 FOR THE CITY OF SANTA CLARITA, I DO HEREBY EXERCISE THE DISCRETION DELEGATED TO ME AND APPROVE THE PLAN OR DESIGN, OR ANY MAJOR OR MODIFICATION TO THE PLAN OR DESIGN, OR A CONSTRUCTION OF, OR AN IMPROVEMENT TO THE PUBLIC FACILITY, STRUCTURE, OR PROPERTY TO WHICH THIS STATEMENT, MY SIGNATURE AND DATE IS AFFIXED.

REGISTERED PROFESSIONAL ENGINEER
ZIRANG SONG
REG. #69315
Expires 06/30/26
CIVIL
STATE OF CALIFORNIA

PREPARED BY ZIRANG SONG	PROJECT ENGINEER	
R.C.E. NO. # 69315 EXP. 06/30/2026		
DRAWN J.P.	SCALE	
DESIGNED J.P.		
CHECKED Z.S.		DATE 03/2025

TITLE **SITE AND UTILITY PLAN**

C258 **NEWHALL PARK POOL**
PUMP ROOM RENOVATION
PLANS (100% CD)
SANTA CLARITA *CA*

SHEET **C1.0**
07 OF 61 SHEETS

JOB NO. C258

Docusign Envelope ID: F28B5F90-22DC-42A7-9ED1-4B9B9540381
Xrefs: C258_Survey Baseflle.dwg; Mechanical Layout.dwg; Existing Utilities.dwg; Grading Plan.dwg; C258 Titleblock.dwg; Piping Layout.dwg; C258 Survey Baseflle civil 3d.dwg
Dimscale = 1; LTscale = 1; PSltscale = 1; ACAD Ver. = 23.0s (LMS Tech); Visretain = 1
R:\C258\Engineering\C258-04 (100% CD)\sheets\C258-04 C1.0 SITE AND UTILITY PLAN.dwg - Tab: 07 - by jenderghost on 09/29/25 at 3:26:48 PM

Sep. 29, 2025

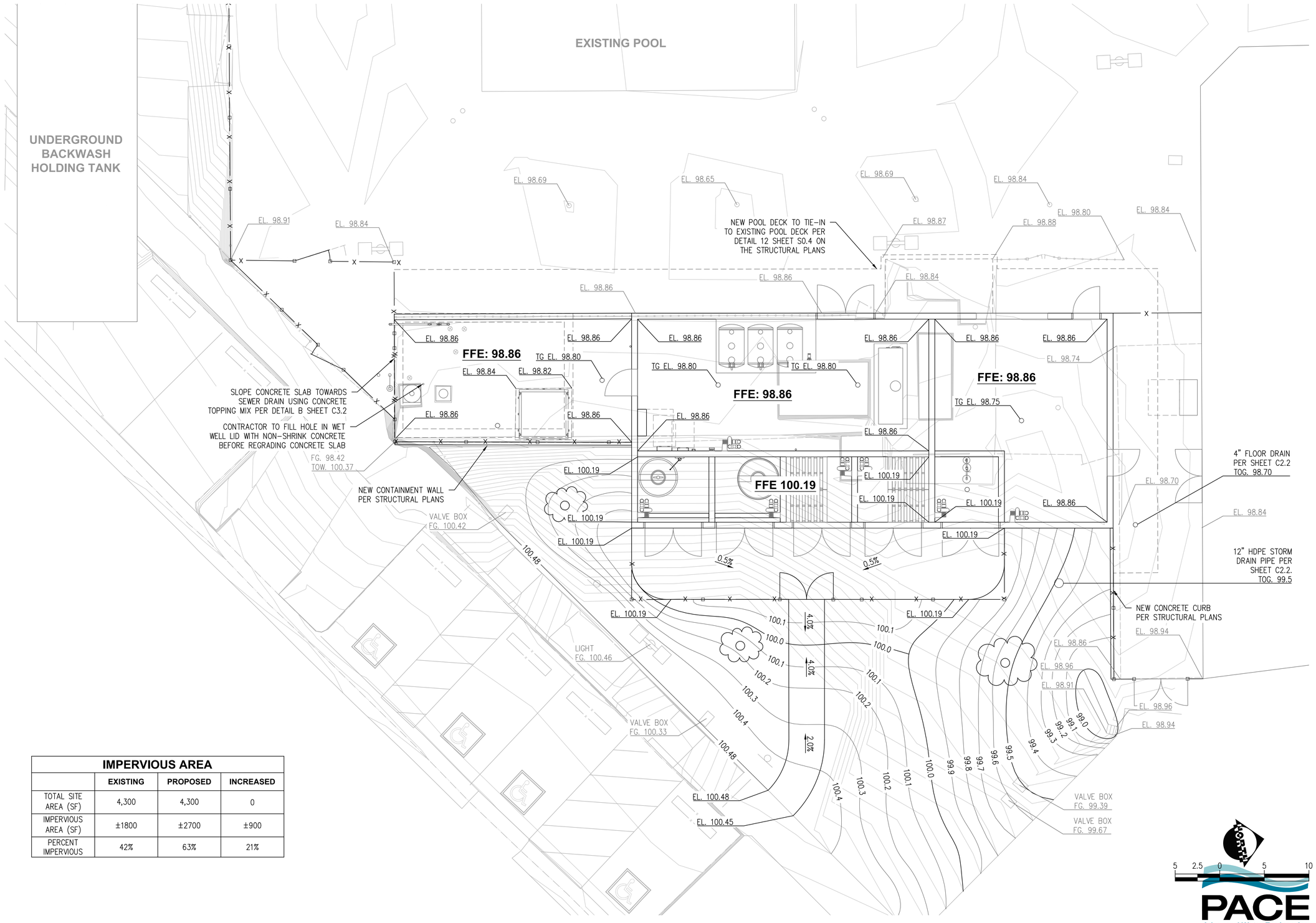

IMPERVIOUS AREA			
	EXISTING	PROPOSED	INCREASED
TOTAL SITE AREA (SF)	4,300	4,300	0
IMPERVIOUS AREA (SF)	±1800	±2700	±900
PERCENT IMPERVIOUS	42%	63%	21%

SITE PLAN
SCALE: 1"=5'-0"

FOR REFERENCE

PACE
Advanced Water Engineering
17520 Newhope Street, Suite 200 | Fountain Valley, CA 92708
P: (714) 481-7300 | www.pacewater.com

REVIEWED BY: 09/30/2025 PM-DESIGN EXECUTION DATE
REVIEWED BY: 09/30/2025 PM-CONSTRUCTION EXECUTION DATE

IN ACCORDANCE WITH RESOLUTION No. 19-6, AS A RESOLUTION OF THE CITY COUNCIL OF THE CITY OF SANTA CLARITA DELEGATING DISCRETIONARY AUTHORITY TO THE DIRECTOR OF PUBLIC WORKS, DIRECTOR OF RECREATION AND COMMUNITY SERVICES, DIRECTOR OF NEIGHBORHOOD SERVICES, CITY ENGINEER, AND ASSISTANT CITY ENGINEERS TO APPROVE PLANS AND DESIGNS FOR THE CONSTRUCTION OF OR IMPROVEMENTS TO PUBLIC PROPERTY FOR PURPOSES OF DESIGN IMMUNITY PURSUANT TO GOVERNMENT CODE SECTION 830.6 FOR THE CITY OF SANTA CLARITA, I DO HEREBY EXERCISE THE DISCRETION DELEGATED TO ME AND APPROVE THE PLAN OR DESIGN, OR AMENDMENT OR MODIFICATION TO THE PLAN OR DESIGN, OR A CONSTRUCTION OF, OR AN IMPROVEMENT TO THE PUBLIC FACILITY, STRUCTURE, OR PROPERTY TO WHICH THIS STATEMENT, MY SIGNATURE AND DATE IS AFFIXED.

REGISTERED PROFESSIONAL ENGINEER ZIRANG SONG REG.#69315 Expires 06/30/26 CIVIL STATE OF CALIFORNIA

PREPARED BY ZIRANG SONG PROJECT ENGINEER R.C.E. NO. — # 69315 EXP. 06/30/2026
DRAWN J.P. SCALE
DESIGNED J.P.
CHECKED Z.S. DATE 03/2025

TITLE
GRADING AND DRAINAGE PLAN

C258
NEWHALL PARK POOL
PUMP ROOM RENOVATION PLANS (100% CD)
SANTA CLARITA CA

SHEET C2.0
08 OF 61 SHEETS
JOB NO. C258

Xrefs: Mechanical Layout.dwg; C258 Survey Basefile civil 3d.dwg; Grading Plan.dwg; C258 Survey Basefile.dwg; C258 Titleblock.dwg; Piping Layout.dwg
Dimscale = 1; LTscale = 1; PSltscale = 1; ACAD Ver. = 23.0s (LMS Tech); Visretain = 1

Docusign Envelope ID: F28B5F90-223C-42A7-9ED1-46869B54D361

Sep. 29, 2025

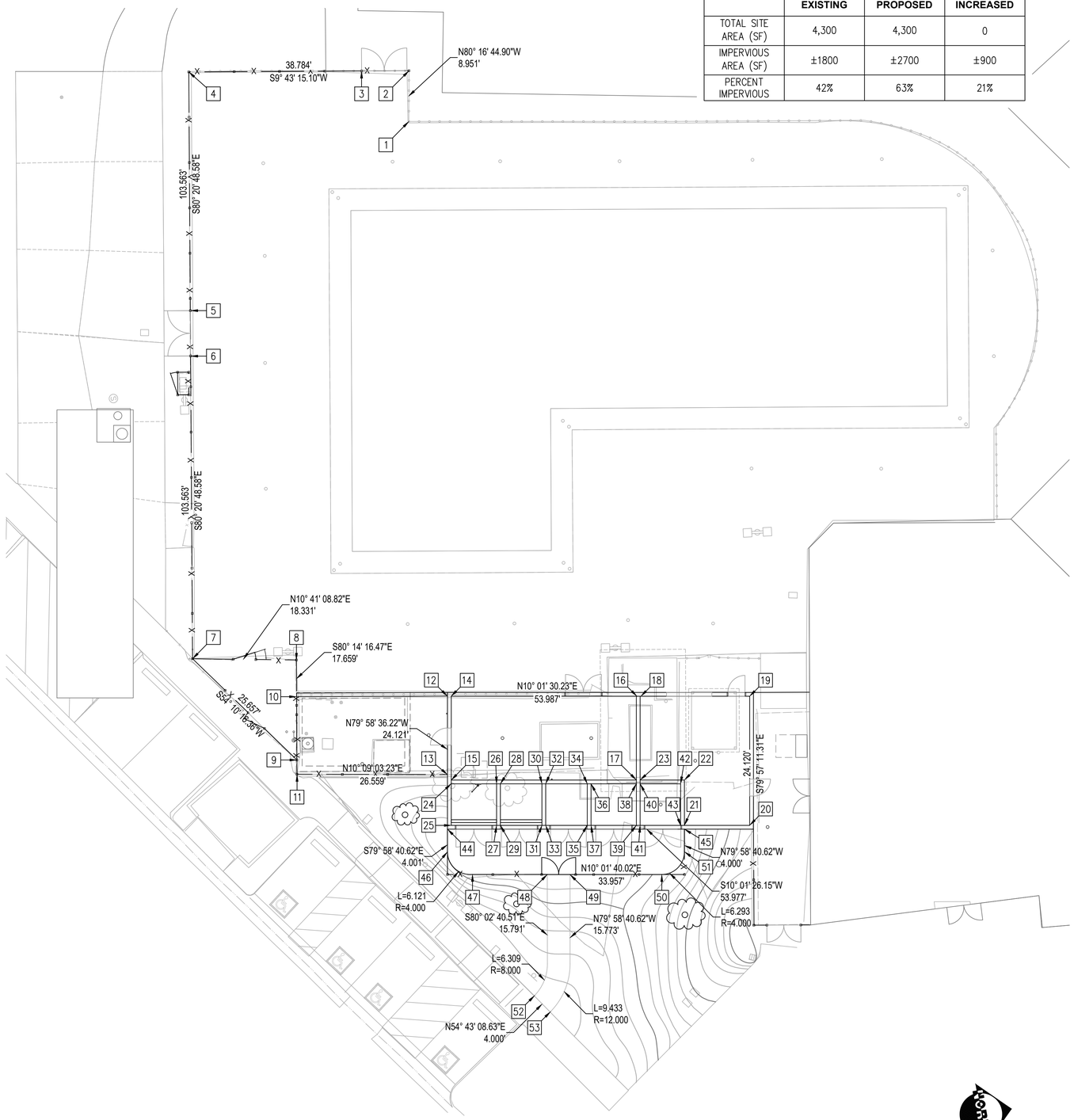

SITE PLAN
SCALE: 1"=10'-0"

IMPERVIOUS AREA

	EXISTING	PROPOSED	INCREASED
TOTAL SITE AREA (SF)	4,300	4,300	0
IMPERVIOUS AREA (SF)	±1800	±2700	±900
PERCENT IMPERVIOUS	42%	63%	21%

POINT TABLE

PNT. #	NORTHING	EASTING	DESCRIPTION
1	5104.74	6874.21	NEW FENCE
2	5106.25	6865.39	NEW FENCE
3	5098.08	6863.99	NEW FENCE
4	5060.96	6900.38	NEW FENCE
5	5068.02	6858.84	NEW FENCE
6	5059.61	6908.27	NEW FENCE
7	5050.66	6960.94	NEW FENCE
8	5068.67	6964.34	NEW FENCE
9	5065.68	6981.74	NEW FENCE
10	5067.57	6970.73	OUTSIDE PUMP STATION
11	5065.25	6984.21	OUTSIDE PUMP STATION
12	5093.81	6975.26	OUTSIDE PUMP STATION
13	5091.39	6988.89	OUTSIDE PUMP STATION
14	5094.46	6975.40	INSIDE PUMP STATION
15	5091.88	6989.96	INSIDE PUMP STATION
16	5126.62	6981.08	INSIDE PUMP STATION
17	5124.05	6995.65	INSIDE PUMP STATION
18	5127.28	6981.20	STORAGE ROOM
19	5146.31	6984.57	STORAGE ROOM
20	5142.34	7007.00	STORAGE ROOM
21	5124.70	6995.76	STORAGE ROOM
22	5132.39	6997.12	STORAGE ROOM
23	5131.00	7005.00	STORAGE ROOM
24	5091.77	6990.62	CHEMICAL ROOM
25	5090.49	6997.84	CHEMICAL ROOM
26	5099.65	6992.01	CHEMICAL ROOM
27	5098.37	6999.23	CHEMICAL ROOM
28	5100.30	6992.13	CHEMICAL ROOM
29	5099.03	6999.35	CHEMICAL ROOM
30	5107.52	6993.40	CHEMICAL ROOM

POINT TABLE

PNT. #	NORTHING	EASTING	DESCRIPTION
31	5106.25	7000.62	CHEMICAL ROOM
32	5108.18	6993.52	CHEMICAL ROOM
33	5106.90	7000.74	CHEMICAL ROOM
34	5115.40	6994.79	CHEMICAL ROOM
35	5114.12	7002.02	CHEMICAL ROOM
36	5116.06	6994.91	CHEMICAL ROOM
37	5114.78	7002.13	CHEMICAL ROOM
38	5123.93	6996.30	CHEMICAL ROOM
39	5122.65	7003.52	CHEMICAL ROOM
40	5124.59	6996.42	EYEWASH ROOM
41	5123.31	7003.64	EYEWASH ROOM
42	5131.62	6997.66	EYEWASH ROOM
43	5130.34	7004.88	EYEWASH ROOM
44	5090.13	6998.45	CONC ACCESS WALKWAY
45	5130.88	7005.66	CONC ACCESS WALKWAY
46	5089.02	7002.32	CONC ACCESS WALKWAY
47	5092.67	7007.03	CONC ACCESS WALKWAY
48	5105.66	7009.32	CONC ACCESS WALKWAY
49	5109.61	7010.04	CONC ACCESS WALKWAY
50	5125.54	7012.84	CONC ACCESS WALKWAY
51	5130.19	7009.59	CONC ACCESS WALKWAY
52	5099.62	7030.06	CONC ACCESS WALKWAY
53	5101.93	7033.32	CONC ACCESS WALKWAY

FOR REFERENCE

PACE
Advanced Water Engineering
17520 Newhope Street, Suite 200 | Fountain Valley, CA 92708
P: (714) 481-7300 | www.pacewater.com

REVIEWED BY: Luis Inzunza 09/30/2025
PM-DESIGN EXECUTION DATE

REVIEWED BY: 09/30/2025
PM-CONSTRUCTION EXECUTION DATE

IN ACCORDANCE WITH RESOLUTION No. 19-6, AS A RESOLUTION OF THE CITY COUNCIL OF THE CITY OF SANTA CLARITA DELEGATING DISCRETIONARY AUTHORITY TO THE DIRECTOR OF PUBLIC WORKS, DIRECTOR OF RECREATION AND COMMUNITY SERVICES, DIRECTOR OF NEIGHBORHOOD SERVICES, CITY ENGINEER, AND ASSISTANT CITY ENGINEERS TO APPROVE PLANS AND DESIGNS FOR THE CONSTRUCTION OF OR IMPROVEMENTS TO PUBLIC PROPERTY FOR PURPOSES OF DESIGN IMMUNITY PURSUANT TO GOVERNMENT CODE SECTION 830.6 FOR THE CITY OF SANTA CLARITA, I DO HEREBY EXERCISE THE DISCRETION DELEGATED TO ME AND APPROVE THE PLAN OR DESIGN, OR AMENDMENT OR MODIFICATION TO THE PLAN OR DESIGN, OR A CONSTRUCTION OF, OR AN IMPROVEMENT TO THE PUBLIC FACILITY, STRUCTURE, OR PROPERTY TO WHICH THIS STATEMENT, MY SIGNATURE AND DATE IS AFFIXED.

REGISTERED PROFESSIONAL ENGINEER
ZIRANG SONG
REG. #69315
Expires 06/30/26
CIVIL
STATE OF CALIFORNIA

PREPARED BY
ZIRANG SONG
PROJECT ENGINEER
R.C.E. NO. # 69315
EXP: 06/30/2026

DRAWN J.P.
SCALE
DESIGNED J.P.
CHECKED Z.S.
DATE 03/2025

TITLE
NORTHING AND EASTING TABLE

C258
NEWHALL PARK POOL
PUMP ROOM RENOVATION
PLANS (100% CD)
SANTA CLARITA CA

SHEET
C2.1
09 OF 61 SHEETS

JOB NO. C258

R:\C258\Engineering\C258-04 (100% CD)\sheets\C258-04 C2.1 NORTHING AND EASTING TABLE.dwg - Tab: 09 - by jperdenghost on 09/29/25 at 3:57:40 PM

Xrefs: C258 Titleblock.dwg; Mechanical Layout.dwg; Northing Easting Table.dwg; Grading Plan.dwg; C258 Survey Baseline.dwg; Piping Layout.dwg; C258 Survey Baseline civil 3d.dwg
Dimscale = 1, LTscale = 1, PSltscale = 1, ACAD Ver. = 23.0s (LMS Tech), Visretain = 1

Docusign Envelope ID: F2885F90-223C-4247-9ED1-4686B8540361

Sep. 29, 2025

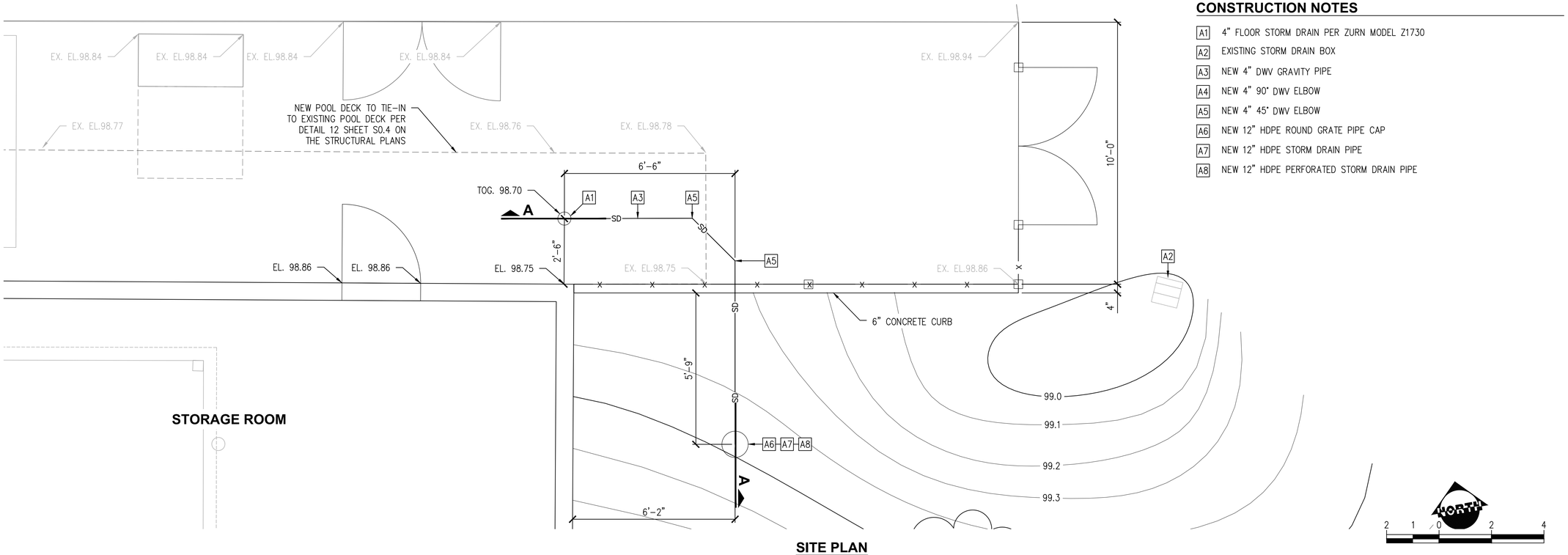

SITE PLAN

SCALE: 1/2"=1'-0"

CONSTRUCTION NOTES

- A1 4" FLOOR STORM DRAIN PER ZURN MODEL Z1730
- A2 EXISTING STORM DRAIN BOX
- A3 NEW 4" DWV GRAVITY PIPE
- A4 NEW 4" 90° DWV ELBOW
- A5 NEW 4" 45° DWV ELBOW
- A6 NEW 12" HDPE ROUND GRATE PIPE CAP
- A7 NEW 12" HDPE STORM DRAIN PIPE
- A8 NEW 12" HDPE PERFORATED STORM DRAIN PIPE

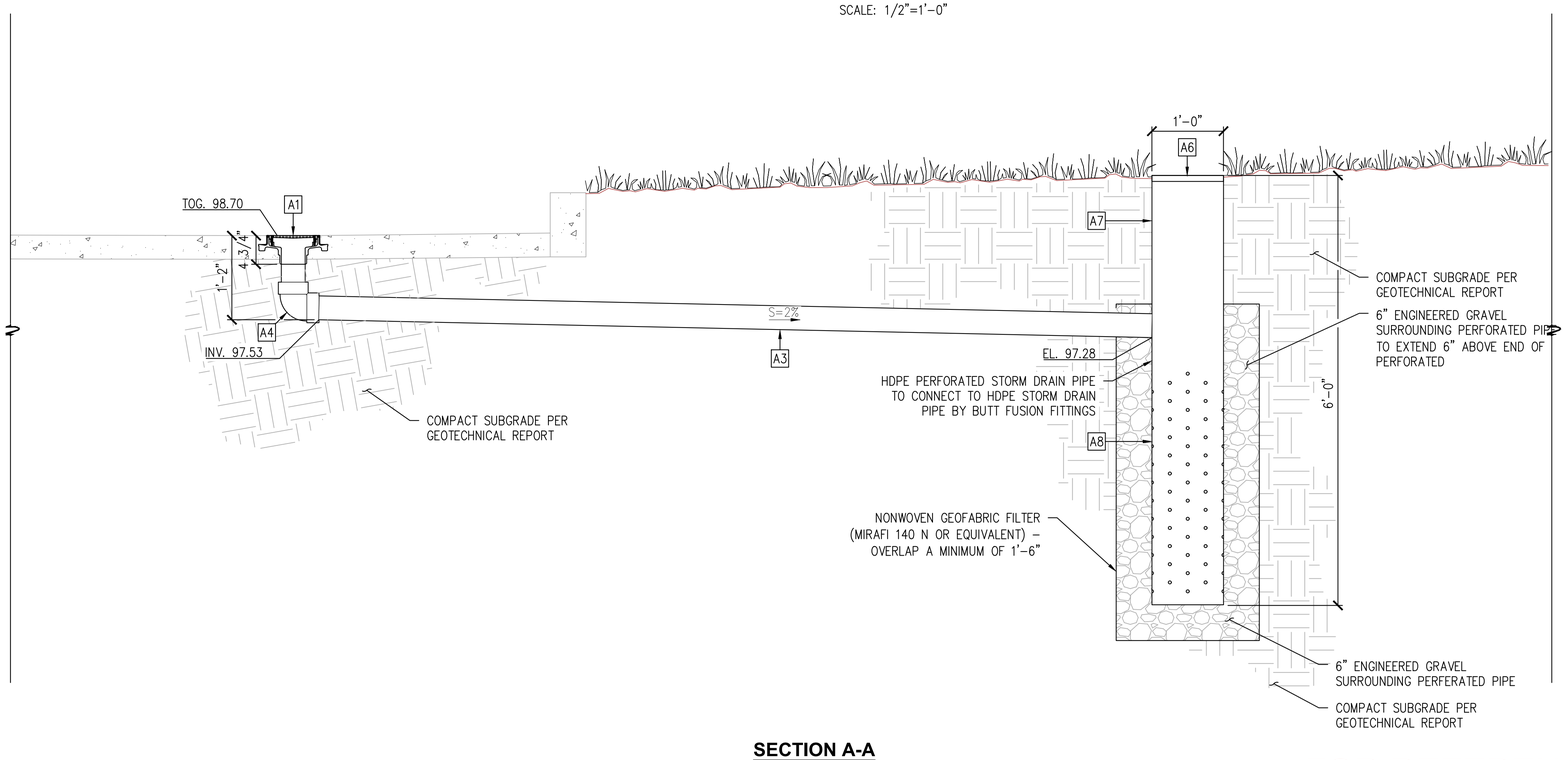

SECTION A-A

SCALE: 1"=1'

FOR REFERENCE

1 0.5 0 1 2

PACE
Advanced Water Engineering
17520 Newhope Street, Suite 200 | Fountain Valley, CA 92708
P: (714) 481-7300 | www.pacewater.com

REVIEWED BY:	
Luis Trujillo	09/30/2025
PM-DESIGN	EXECUTION DATE
REVIEWED BY:	
	09/30/2025
PM-CONSTRUCTION	EXECUTION DATE

IN ACCORDANCE WITH RESOLUTION No. 19-6, AS A RESOLUTION OF THE CITY COUNCIL OF THE CITY OF SANTA CLARITA DELEGATING DISCRETIONARY AUTHORITY TO THE DIRECTOR OF PUBLIC WORKS, DIRECTOR OF RECREATION AND COMMUNITY SERVICES, DIRECTOR OF NEIGHBORHOOD SERVICES, CITY ENGINEER, AND ASSISTANT CITY ENGINEERS TO APPROVE PLANS AND DESIGNS FOR THE CONSTRUCTION OF OR IMPROVEMENTS TO PUBLIC PROPERTY FOR PURPOSES OF DESIGN IMMUNITY PURSUANT TO GOVERNMENT CODE SECTION 830.6 FOR THE CITY OF SANTA CLARITA, I DO HEREBY EXERCISE THE DISCRETION DELEGATED TO ME AND APPROVE THE PLAN OR DESIGN, AMENDMENT OR MODIFICATION TO THE PLAN OR DESIGN, OR A CONSTRUCTION, OF, OR AN IMPROVEMENT TO THE PUBLIC FACILITY, STRUCTURE, OR PROPERTY TO WHICH THIS STATEMENT, MY SIGNATURE AND DATE IS AFFIXED.

REGISTERED PROFESSIONAL ENGINEER
ZIRANG SONG
REG. #69315
Expires 06/30/26
CIVIL
STATE OF CALIFORNIA

PREPARED BY	
ZIRANG SONG	PROJECT ENGINEER
R.C.E. NO.	# 69315
EXP.	06/30/2026
DRAWN J.P	SCALE
DESIGNED J.P	
CHECKED Z.S	DATE 03/2025

TITLE **GENERAL SECTIONS**

C258 **NEWHALL PARK POOL**
PUMP ROOM RENOVATION
PLANS (100% CD)
SANTA CLARITA CA

SHEET **C2.2**
10 OF 61 SHEETS

JOB NO. C258

Docusign Envelope ID: F28B5F90-2230-42A7-9ED1-4886B9B4D361

Xrefs: C258 Titleblock.dwg; Civil Section View.dwg; C258 Survey Baseflie.dwg; Mechanical Layout.dwg; Piping Layout.dwg; Grading Plan.dwg; C258 Survey Baseflie civil 3d.dwg
Dimscale = 1; LTscale = 1; PSltscale = 1; ACAD Ver. = 23.0s (LMS Tech); Visretain = 1

R:\C258\Engineering\C258-04 (100% CD)\sheets\C258-04 C2.2 GENERAL SECTIONS.dwg – Tab: 10 – by jpenterghost on 09/29/25 at 3:56:30 PM

Sep. 29, 2025

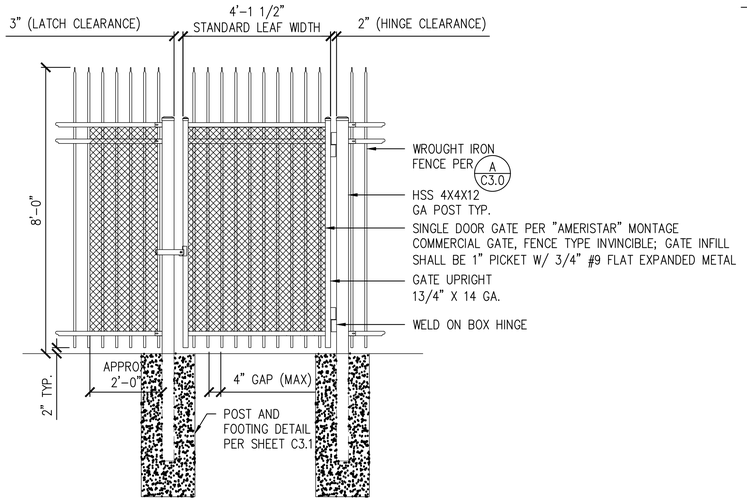

E ***WROUGHT IRON SINGLE DOOR GATE PER AMERISTAR***
SCALE: 1/2"=1'-0"

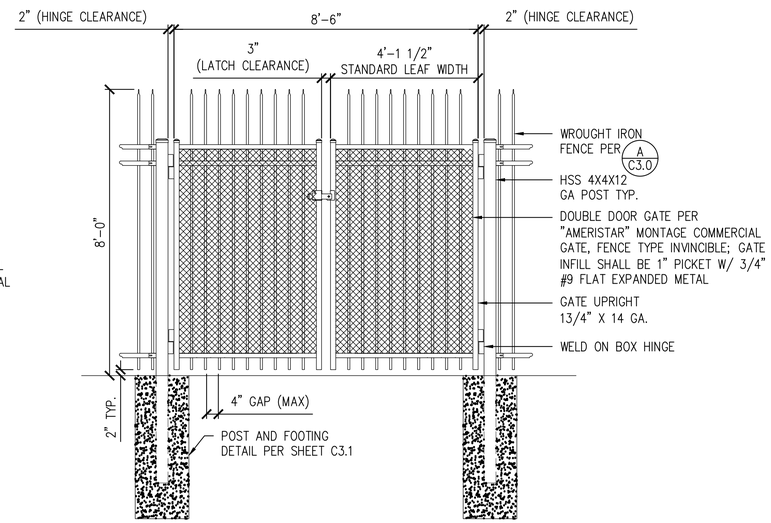

C ***WROUGHT IRON DOUBLE DOOR GATE PER AMERISTAR***
SCALE: 1/2"=1'-0"

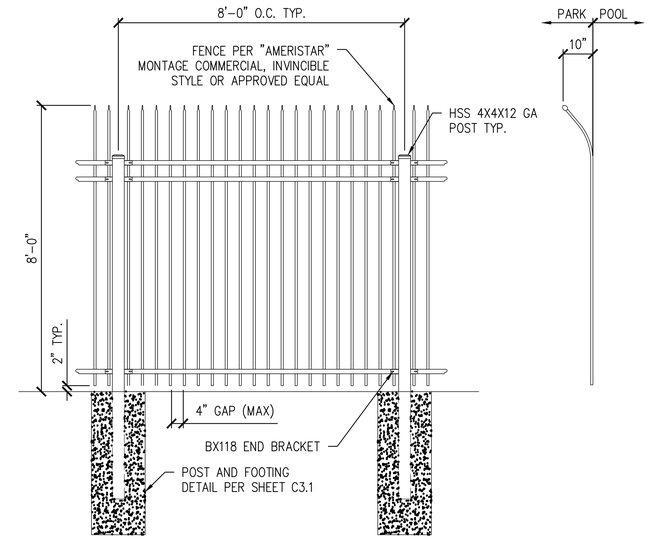

A ***WROUGHT IRON FENCE PER AMERISTAR***
SCALE: 1/2"=1'-0"

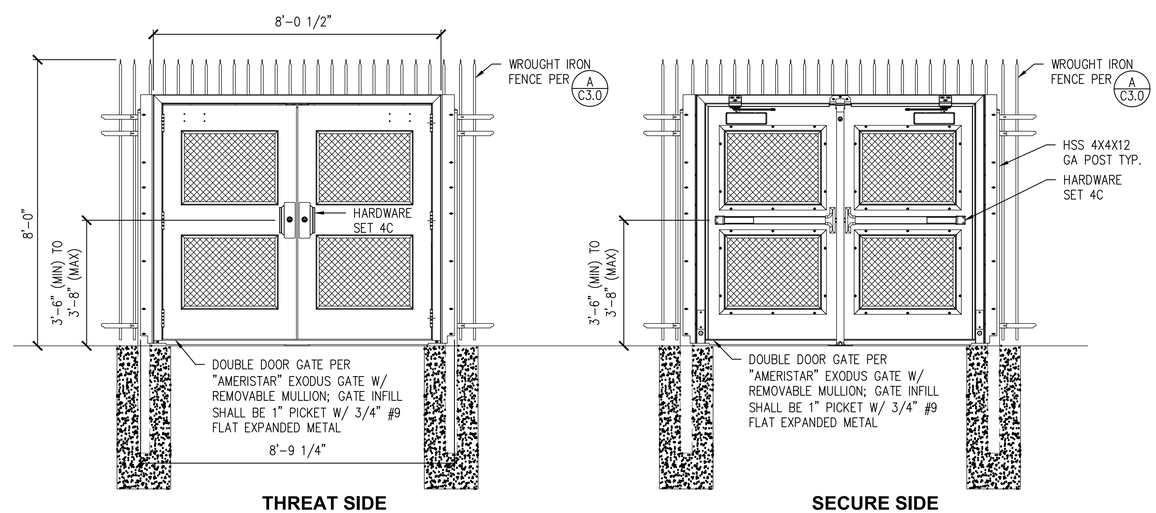

D ***EXODUS DOUBLE DOOR EGRESS GATE PER AMERISTAR***
SCALE: 1/2"=1'-0"

CITY OF SANTA CLARITA
BUILDING & SAFETY
APPROVED
Under SCMC Titles 18, 19, 20, 21, 24, 25
Sep 16, 2025
F. Svendsen
BLD25-00576 (ARCH)
The approved plans must be available at the construction site at all times. Approval of these plans by the City of Santa Clarita shall not be made without written permission from the City of Santa Clarita Building & Safety Division. The approval of these plans shall not be construed to permit or approve any violation of the applicable codes, ordinances, or other laws.

PACE
Advanced Water Engineering
17520 Newhope Street, Suite 200 | Fountain Valley, CA 92708
P: (714) 481-7300 | www.pacewater.com

REVIEWED BY		
Luke Trudell	09/30/2025	
PM - DESIGN	EXECUTION DATE	
REVIEWED BY		
Victor Gil	09/30/2025	
PM - CONSTRUCTION	EXECUTION DATE	

IN ACCORDANCE WITH RESOLUTION No. 19-6, AS A RESOLUTION OF THE CITY COUNCIL OF THE CITY OF SANTA CLARITA DELEGATING DISCRETIONARY AUTHORITY TO THE DIRECTOR OF PUBLIC WORKS, DIRECTOR OF RECREATION AND COMMUNITY SERVICES, DIRECTOR OF REDEVELOPMENT, DIRECTOR OF PLANNING, AND ASSISTANT CITY ENGINEERS TO APPROVE PLANS AND DESIGNS FOR THE CONSTRUCTION OF OR IMPROVEMENTS TO PUBLIC PROPERTY FOR PURPOSES OF DESIGN IMMUNITY PURSUANT TO GOVERNMENT CODE SECTION 830.6 FOR THE CITY OF SANTA CLARITA, I DO HEREBY EXERCISE THE DISCRETION DELEGATED TO ME AND APPROVE THE PLAN OR DESIGN, OR ALTERATION OR MODIFICATION TO THE PLAN OR DESIGN, OR A CONSTRUCTION OF, OR AN IMPROVEMENT TO THE PUBLIC FACILITY, STRUCTURE, OR PROPERTY TO WHICH THIS STATEMENT, MY SIGNATURE AND DATE IS AFFIXED.

REGISTERED PROFESSIONAL ENGINEER
ZIRANG SONG
REG. #69315
Expires 06/30/26
CIVIL
STATE OF CALIFORNIA

PREPARED BY		
ZIRANG SONG		
PROJECT ENGINEER		
R.C.E. NO. # 69315		
EXP. 06/30/2026		
DRAWN J.P	SCALE	
DESIGNED J.P		
CHECKED Z.S	DATE 03/2025	

TITLE **GENERAL DETAILS**

C258 ***NEWHALL PARK POOL***
PUMP ROOM RENOVATION
PLANS (100% CD)
SANTA CLARITA ***CA***

SHEET **C3.0**
11 OF 61 SHEETS

JOB NO. C258

Docusign Envelope ID: F28B5F90-223C-42A7-8ED1-46B69B54D361
Xrefs: DETAIL.dwg; C258 Titleblock.dwg
Dmscale = 1; LTscale = 1; PSltscale = 1; ACAD Ver. = 23.0s (LMS Tech); Visretain = 1
R:\C258\Engineering\C258-04 (100% CD)\sheets\C258-04 C3.0 GENERAL DETAILS.dwg - Tab: T1 - by jenniferghost on 09/23/25 at 3:58:20 PM

Sep. 29, 2025

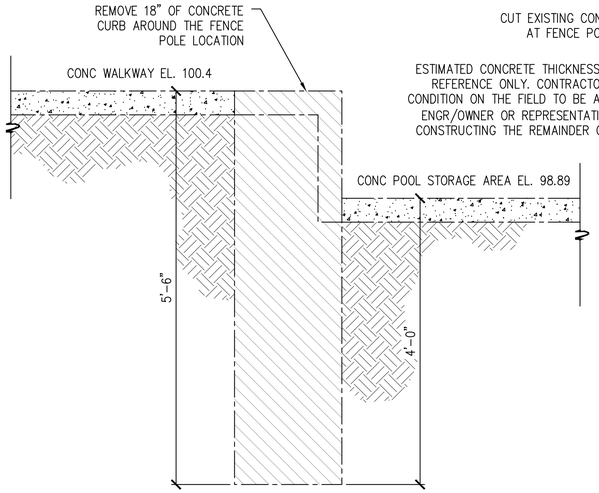

SECTION VIEW

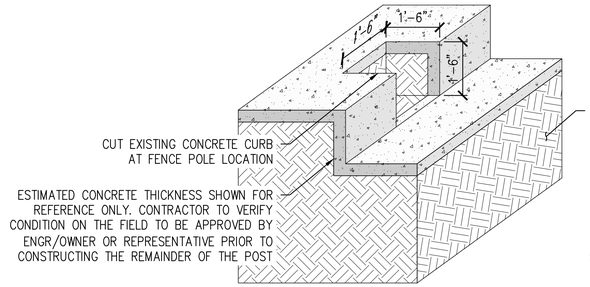

ISOMETRIC VIEW

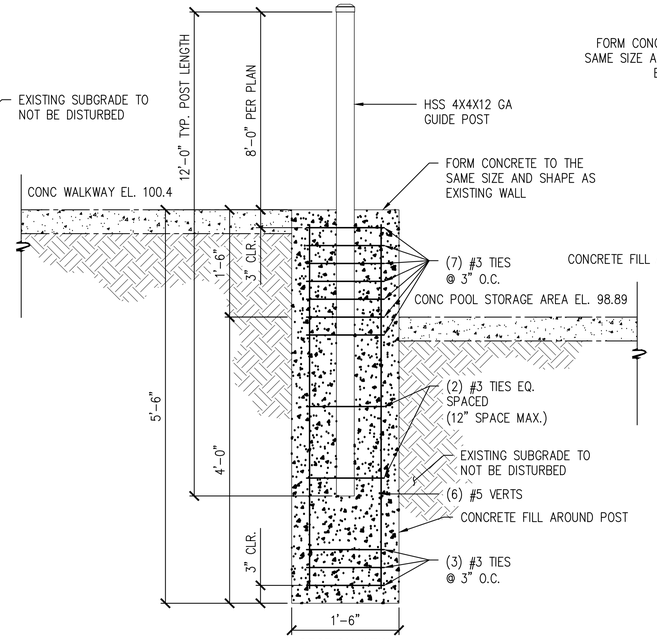

SECTION VIEW

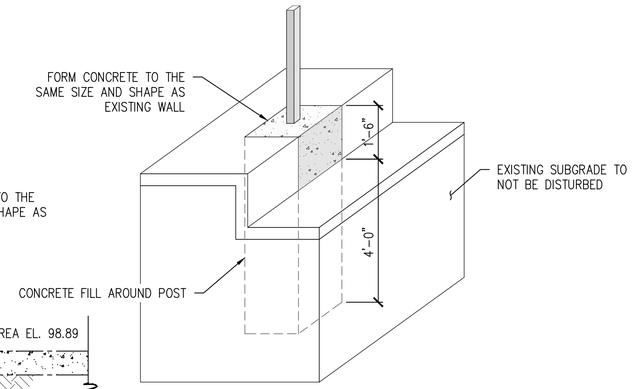

ISOMETRIC VIEW

E POST DETAIL AT STEP
SCALE: 1"=1'-0"

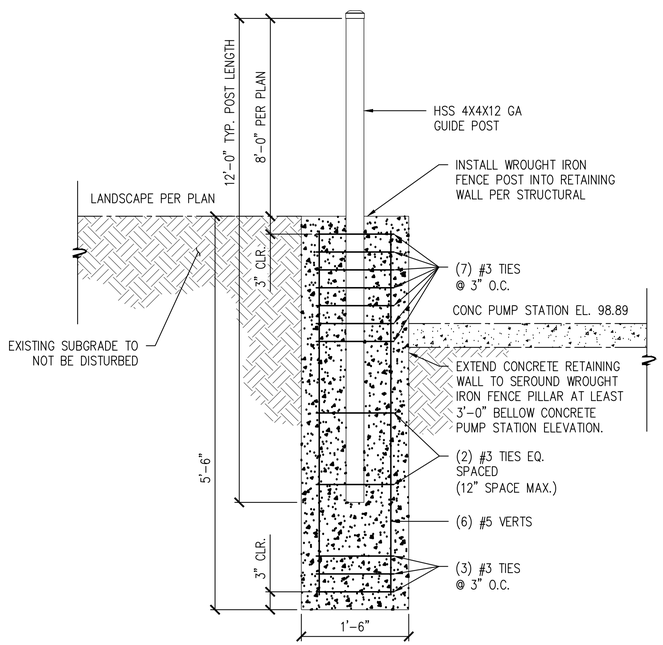

F POST DETAIL AT RETAINING WALL
SCALE: 1"=1'-0"

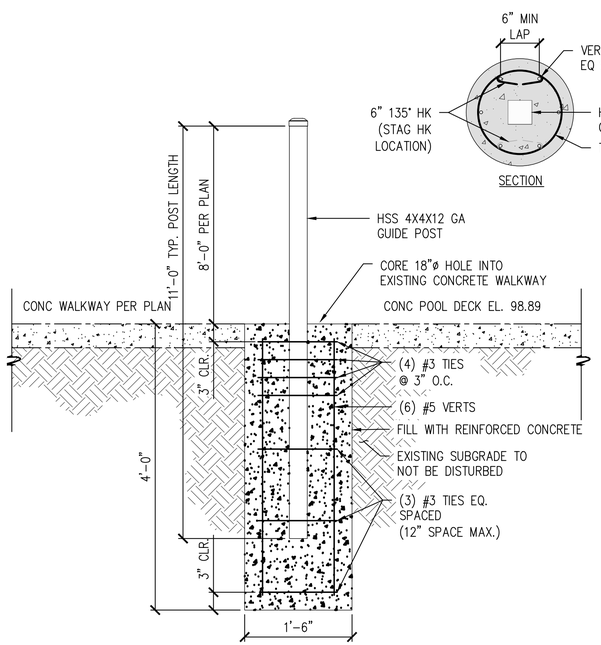

D POST DETAIL AT WALKWAY
SCALE: 1"=1'-0"

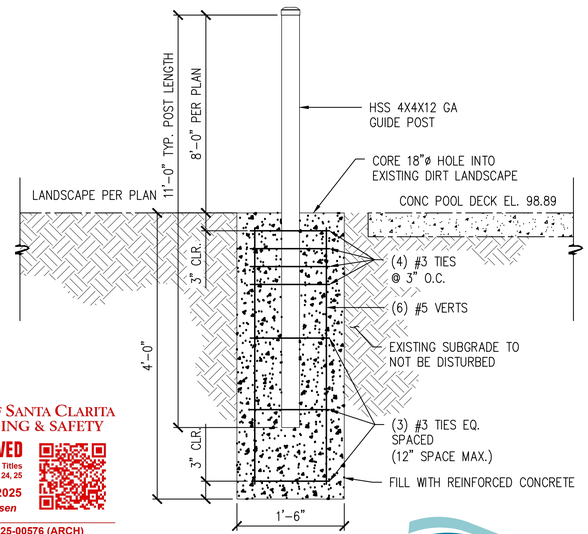

B POST DETAIL AT LANDSCAPE
SCALE: 1/2"=1'-0"

CITY OF SANTA CLARITA
BUILDING & SAFETY
APPROVED
Under SCMC Titles 18, 19, 20, 21, 24, 25
Sep 16, 2025
F. Svendsen
BLD25-00576 (ARCH)
The approved plans must be available at the construction site at all times. Changes or alterations to approved plans shall not be made without written permission from the City of Santa Clarita Building & Safety Division. Approval of these plans shall not be construed to permit or approve any violation of the applicable codes, ordinances, or other laws.

PACE
Advanced Water Engineering
17520 Newhope Street, Suite 200 | Fountain Valley, CA 92708
P: (714) 481-7300 | www.pacewater.com

REVIEWED BY: Luis Inzunza PM - DESIGN	09/30/2025 EXECUTION DATE
REVIEWED BY: Victor Hernandez PM - CONSTRUCTION	09/30/2025 EXECUTION DATE

IN ACCORDANCE WITH RESOLUTION No. 19-6, AS A RESOLUTION OF THE CITY COUNCIL OF THE CITY OF SANTA CLARITA DELEGATING DISCRETIONARY AUTHORITY TO THE DIRECTOR OF NEIGHBORHOOD SERVICES, CITY ENGINEER, AND ASSISTANT CITY ENGINEERS TO APPROVE PLANS AND DESIGNS FOR THE CONSTRUCTION OF OR IMPROVEMENTS TO PUBLIC PROPERTY FOR PURPOSES OF DESIGN IMMUNITY PURSUANT TO GOVERNMENT CODE SECTION 830.6 FOR THE CITY OF SANTA CLARITA, I DO HEREBY EXERCISE THE DISCRETION DELEGATED TO ME AND APPROVE THE PLAN OR DESIGN, OR A MODIFICATION OR MODIFICATION TO THE PLAN OR DESIGN, OR A CONSTRUCTION OF, OR AN IMPROVEMENT TO THE PUBLIC FACILITY, STRUCTURE, OR PROPERTY TO WHICH THIS STATEMENT, MY SIGNATURE AND DATE IS AFFIXED.

REGISTERED PROFESSIONAL ENGINEER
ZIRANG SONG
REG.#69315
Expires 06/30/26
CIVIL
STATE OF CALIFORNIA

PREPARED BY ZIRANG SONG	PROJECT ENGINEER
R.C.E. NO. # 69315	
EXP. 06/30/2026	
DRAWN J.P	SCALE
DESIGNED J.P	
CHECKED Z.S	DATE 03/2025

TITLE **GENERAL DETAILS**

C258 **NEWHALL PARK POOL**
PUMP ROOM RENOVATION
PLANS (100% CD)
SANTA CLARITA CA

SHEET **C3.1**
12 OF 61 SHEETS

JOB NO. C258

Docusign Envelope ID: F28B5F90-2230-42A7-9ED1-46869B540361
Xrefs: C258 Titleblock.dwg; DETAIL.dwg
Dimscale = 1; LTscale = 1; PSltscale = 1; ACAD Ver. = 23.0s (LMS Tech); Visretain = 1
R:\C258\Engineering\C258-04 (100% CD)\sheets\C258-04 C3.1 GENERAL DETAILS.dwg - Tab: 12 - by jenderghost on 09/29/25 at 3:36:12 PM

Sep. 29, 2025

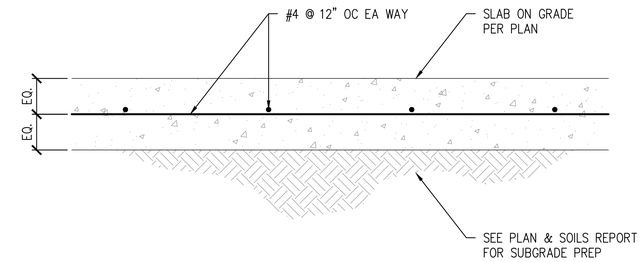

SLAB ON GRADE

A ***CONCRETE SLAB DETAIL***
SCALE: 1"=1'-0"

NOTE:
CONTRACTOR SHALL PREPARE THE EXISTING SURFACE AND INSTALL PER MANUFACTURER'S RECOMMENDATIONS.

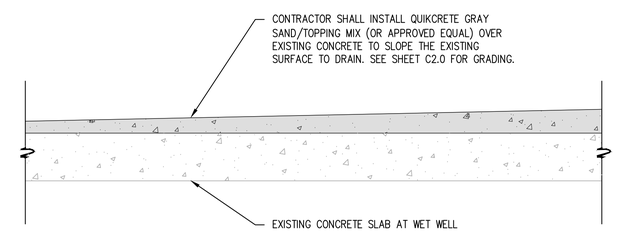

CITY OF SANTA CLARITA
BUILDING & SAFETY
APPROVED
Under SCMC Titles 18, 19, 20, 21, 24, 25
Sep 16, 2025
F. Svendsen
BLD25-00576 (ARCH)
The approved plans must be available at the construction site at all times. Changes or alterations to approved plans shall not be made without written permission from the City of Santa Clarita Building & Safety Division. The approval of these plans shall not be construed to permit or approve any violation of the applicable codes, ordinances, or other laws.

B ***WET WELL REGRADING DETAIL***
SCALE: NTS

PACE
Advanced Water Engineering
17520 Newhope Street, Suite 200 | Fountain Valley, CA 92708
P: (714) 481-7300 | www.pacewater.com

REVIEWED BY: Lake Toupel 09/30/2025
PM - DESIGN EXECUTION DATE

REVIEWED BY: [signature] 09/30/2025
PM - CONSTRUCTION EXECUTION DATE

IN ACCORDANCE WITH RESOLUTION No. 19-6, AS A RESOLUTION OF THE CITY COUNCIL OF THE CITY OF SANTA CLARITA DELEGATING DISCRETIONARY AUTHORITY TO THE DIRECTOR OF PUBLIC WORKS, DIRECTOR OF RECREATION AND COMMUNITY SERVICES, DIRECTOR OF NEIGHBORHOOD SERVICES, CITY ENGINEER, AND ASSISTANT CITY ENGINEERS TO APPROVE PLANS AND DESIGNS FOR THE CONSTRUCTION OF OR IMPROVEMENTS TO PUBLIC PROPERTY FOR PURPOSES OF DESIGN IMMUNITY PURSUANT TO GOVERNMENT CODE SECTION 830.6 FOR THE CITY OF SANTA CLARITA, I DO HEREBY EXERCISE THE DISCRETION DELEGATED TO ME AND APPROVE THE PLAN OR DESIGN, OR AMENDMENT OR MODIFICATION TO THE PLAN OR DESIGN, OR A CONSTRUCTION OF, OR AN IMPROVEMENT TO THE PUBLIC FACILITY, STRUCTURE, OR PROPERTY TO WHICH THIS STATEMENT, MY SIGNATURE AND DATE IS AFFIXED.

REGISTERED PROFESSIONAL ENGINEER
ZIRANG SONG
REG.#69315
Expires 06/30/26
CIVIL
STATE OF CALIFORNIA

PREPARED BY
ZIRANG SONG
PROJECT ENGINEER
R.C.E. NO. — #69315
EXP. 06/30/2026

DRAWN	SCALE
J.P	
DESIGNED	
J.P	
CHECKED	DATE
Z.S	03/2025

TITLE
GENERAL DETAILS

C258
NEWHALL PARK POOL
PUMP ROOM RENOVATION PLANS (100% CD)
SANTA CLARITA CA

SHEET
C3.2
13 OF 61 SHEETS

JOB NO. C258

Docusign Envelope ID: F2885F90-223C-42A7-9ED1-46869B540361
Xrefs: C258 Titleblock.dwg; DETAIL.dwg
Dimscale = 1; LTscale = 1; PSltscale = 1; ACAD Ver. = 23.0s (LMS Tech); Visretain = 1
R:\C258\Engineering\C258-04 (100% CD)\sheets\C258-04 C3.2 GENERAL DETAILS.dwg - Tab: 13 - by jpenderghast on 09/29/25 at 3:56:04 PM

Docusign Envelope ID: F28B5F90-223C-42A7-9ED1-46869B54D361

Xrefs: C258 Titleblock.dwg
Dimscale = 1; LTscale = 1; PSltscale = 1; ACAD Ver. = 23.0s (LMS Tech); Visretain = 1

PACE
ARCHITECTURE & DESIGN GROUP
17520 Newhope St., Suite 200
Fountain Valley, CA 92708
P: (714) 481-8900

100% CD FOR REVIEW

JOB NO.	C258
SHEET	A1.0
14 OF 61 SHEETS	

C258

NEWHALL PARK POOL

PUMP ROOM RENOVATION

PLANS (100% CD)

SANTA CLARITA **CA**

TITLE

RENDERINGS

FOR REFERENCE

PREPARED BY	
Approver	
PROJECT ARCHITECT	
C-28045	
EXP: 12.31.25	
DRAWN BY	SCALE
Author	
DESIGNED BY	
Designer	
CHECKED BY	DATE
JMW	SEPT. 2025

100% CD FOR REVIEW

LICENSED ARCHITECT
MICHAEL J. WOLF
C-28045
EXP. DEC 31, 2025
STATE OF CALIFORNIA

IN ACCORDANCE WITH RESOLUTION No. 19-6, AS A RESOLUTION OF THE CITY COUNCIL OF THE CITY OF SANTA CLARITA DELEGATING DISCRETIONARY AUTHORITY TO THE DIRECTOR OF PUBLIC WORKS, DIRECTOR OF RECREATION AND COMMUNITY SERVICES, DIRECTOR OF NEIGHBORHOOD SERVICES, CITY ENGINEER, AND ASSISTANT CITY ENGINEERS TO APPROVE PLANS AND DESIGNS FOR THE CONSTRUCTION OF OR IMPROVEMENTS TO PUBLIC PROPERTY FOR PURPOSES OF DESIGN IMMUNITY PURSUANT TO GOVERNMENT CODE SECTION 830.6 FOR THE CITY OF SANTA CLARITA, I DO HEREBY EXERCISE THE DISCRETION DELEGATED TO ME AND APPROVE THE PLAN OR DESIGN, OR AMENDMENT OR MODIFICATION TO THE PLAN OR DESIGN, OR A CONSTRUCTION OF, OR AN IMPROVEMENT TO THE PUBLIC FACILITY, STRUCTURE, OR PROPERTY TO WHICH THIS STATEMENT, MY SIGNATURE AND DATE IS AFFIXED.

REVIEWED BY: Kate Vaughn	09/30/2025
PM - DESIGN	EXECUTION DATE
REVIEWED BY: Steve Hernandez	09/30/2025
PM - CONSTRUCTION	EXECUTION DATE

R:\C258\Engineering\C258-04 (100% CD)\sheets\C258-04 A1.0 RENDERINGS.dwg - Tab: 14 - by jpenderghost on 09/29/25 at 1:16:36 PM

Sep. 29, 2025

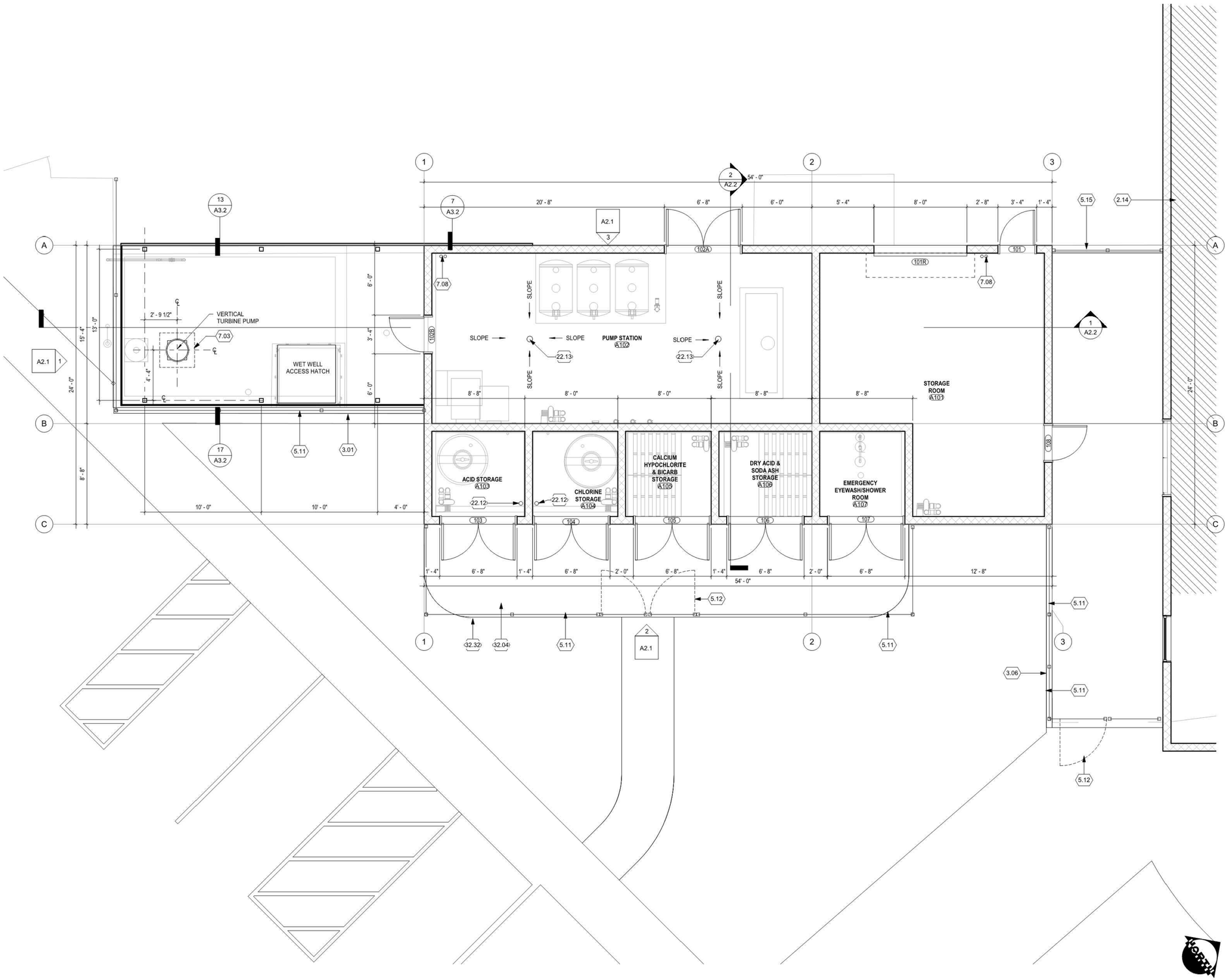

FLOOR PLAN
1
1/4" = 1'-0"

KEYNOTES

NO.	Note - Detail
2.14	(E) BUILDING
3.01	RETAINING WALL (SEE STRUCT)
3.06	CONCRETE CURB (SEE STRUCT)
5.11	8' HIGH WROUGHT IRON FENCE PANEL PER SHEET C1.0
5.12	WROUGHT IRON GATE
5.15	8' HIGH WROUGHT IRON FENCE PANEL PER SHEET C1.0
7.03	MINIMUM 36"x36" CLR. ROOF HATCH OPENING WITH REMOVABLE FIBER GLASS COVER, CURB MOUNTED
7.08	ROOF DRAIN AND OVERFLOW DRAIN
22.12	EMERGENCY EYE-WASH STATION
22.13	FLOOR DRAIN
32.04	CONCRETE PAVING
32.32	LANDSCAPE AREA

BUILDING CODE ANALYSIS

OCCUPANCY CLASSIFICATION	U
CONSTRUCTION TYPE	V-B
OCC. SEPARATION REQUIRED	NO
AUTOMATIC SPRINKLER SYSTEM	NO
ALLOWABLE AREA	
BASIC ALLOWABLE AREA (TABLE 503)	8,500 s.f.
ACTUAL AREA	
PROPOSED BUILDING AREA:	1,296 s.f.
PROPOSED COVERED AREA:	730 s.f.
ALLOWABLE HEIGHT	
MAX. HEIGHT IN FT./STORIES (PER CBC TABLE 503 IN ACCORDANCE WITH SECTION 504.2)	40'-0"/1
ACTUAL HEIGHT	
PROPOSED HEIGHT IN FT/STORIES	14'-0"

FLOOR PLAN NOTES

1. ALL EXITS TO BE OPENABLE FROM INSIDE WITHOUT THE USE OF KEY AND/OR SPECIAL KNOWLEDGE OR EFFORT. U.N.O. SURFACE MOUNTED FLUSH OR SURFACE BOLTS ARE PROHIBITED.

2. PAINT ALL STEEL COLUMNS, LADDERS, METAL DOORS AND FRAMES AND STEEL RAILS PER SPECS. COLORS BY OWNER.

3. ALL INSULATION SHALL HAVE FLAME SPREAD RATE NOT TO EXCEED 25 AND A SMOKE DENSITY NOT TO EXCEED 450 WHEN TESTED IN ACCORDANCE WITH U.B.C. STANDARD NO. 42-1.

4. PROVIDE 4'-0" HIGH ANGLE IRON DOOR GUARDS AT FLOOR OF EACH JAMB OF EACH OVERHEAD DOOR OPENING.

5. PROVIDE EXTERIOR MASONRY WITH SPLIT-FACED, PRECISION AND COLORS TO MATCH EXISTING BUILDING. [COLORS TO BE SELECTED BY OWNER].

6. PROVIDE EXTERIOR BLOCK FILLER AND ANTI-GRAFFITI COATING - SURE KLAEAN BLOK-GUARD & GRAFFITI CONTROL II.

7. ALL LOUVERS AND VENTS ARE TO BE COVERED WITH AN EXPANDED STEEL MESH, MEDIUM GRADE THICKNESS OVER THE INTERIOR OF THE VENT. MESH COVERING SHALL BE INTEGRAL IN THE FRAME OF VENTS/LOUVERS.

8. MAXIMUM ALLOWABLE NaOCL (CORROSIVE LIQUID) IN-USE STORAGE SHALL BE 500-LIQUID GALLONS PER CB TABLE 307.1(2)

NOTE:

ALL CONSTRUCTION SHALL CONFORM TO THE 2022 CALIFORNIA BUILDING, FIRE, MECHANICAL, PLUMBING, ELECTRICAL, ENERGY CODE AND GREEN BUILDING CODE.

CITY OF SANTA CLARITA
BUILDING & SAFETY
APPROVED
Under SCMC Titles 18, 19, 20, 21, 24, 25
Sep 16, 2025
F. Svendsen
BLD25-00576 (ARCH)
The approved plans must be available at the construction site at all times. Changes or alterations to approved plans shall not be made without written permission from the City of Santa Clarita Building & Safety Division. The approval of these plans shall not be construed to permit or approve any violation of the applicable codes, ordinances, or other laws.

100% CD FOR REVIEW

PACE
Advanced Water Engineering
12520 Newhope Street, Suite 200 | Fountain Valley, CA 92708
P: (714) 481-7300 | www.pacewater.com

REVIEWED BY:	09/30/2025	
PM-DESIGN	EXECUTION DATE	
REVIEWED BY:	09/30/2025	
PM-CONSTRUCTION	EXECUTION DATE	

IN ACCORDANCE WITH RESOLUTION No. 19-6, AS A RESOLUTION OF THE CITY COUNCIL OF THE CITY OF SANTA CLARITA DELEGATING DISCRETIONARY AUTHORITY TO THE DIRECTOR OF PUBLIC WORKS, DIRECTOR OF RECREATION AND COMMUNITY SERVICES, DIRECTOR OF PLANNING, AND CITY ENGINEER, AND CONSTANT CITY ENGINEERS TO APPROVE PLANS AND DESIGNS FOR THE CONSTRUCTION OF OR IMPROVEMENTS TO PUBLIC PROPERTY FOR PURPOSES OF DESIGN IMMUNITY PURSUANT TO GOVERNMENT CODE SECTION 830.6 FOR THE CITY OF SANTA CLARITA, I DO HEREBY EXERCISE THE DELEGATED AUTHORITY TO THE ABOVE PERSONS, OR ANY ASSISTANT, ACTING, OR MODIFICATION TO THE PLAN OR DESIGN, OR A CONSTRUCTION, OF, OR AN IMPROVEMENT TO THE PUBLIC FACILITY, STRUCTURE, OR PROPERTY TO WHICH THIS STATEMENT, MY SIGNATURE AND DATE IS AFFIXED.

100% CD FOR REVIEW

REGISTERED ARCHITECT
JAMIE MICHAEL WEBB
C-28045
EXP. DEC 31, 2025
STATE OF CALIFORNIA

PREPARED BY JMW	PROJECT ARCHITECT C-28045 EXP: 12.31.25
DRAWN BY SG-1	SCALE As Indicated
DESIGNED BY SG-1	
CHECKED BY JMW	DATE SEPT. 2025

TITLE
FLOOR PLAN

C258
NEWHALL PARK POOL
PUMP ROOM RENOVATION
PLANS (100% CD)
SANTA CLARITA CA

SHEET
A1.1
15 OF 61 SHEETS

JOB NO. C258

R:\C258\Engineering\C258-04 (100% CD)\sheets\C258-04 A1.1 FLOOR PLAN.dwg - Tab: 15 - by gpenlerghost on 09/29/25 at 1:17:14 PM
Docusign Envelope ID: F28B5F90-223C-42A7-8ED1-46868B540361
Xrefs: C258 Titleblock.dwg
Dmscale = 1; LTscale = 1; PSltscale = 1; ACAD Ver. = 23.0s (LMS Tech); Visretain = 1

Sep. 29, 2025

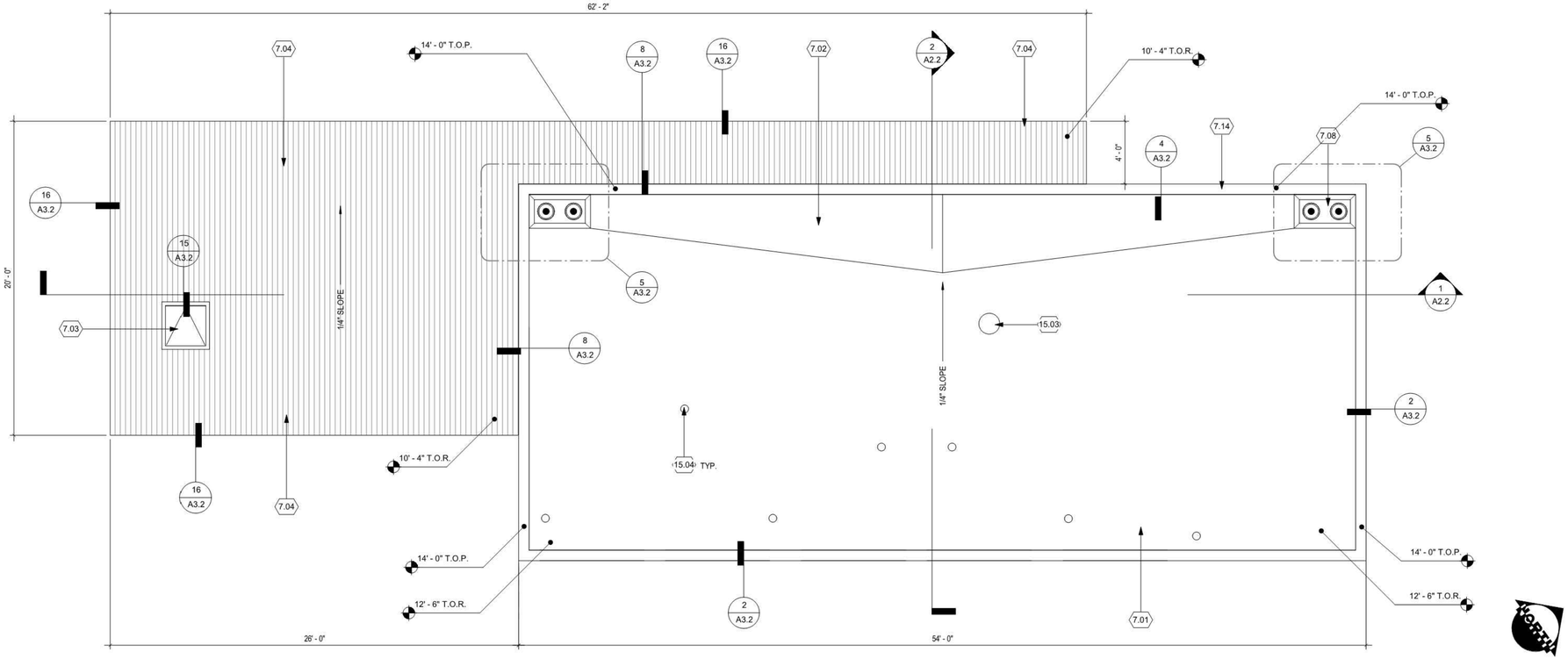

ROOF PLAN | 2 | 1/4" = 1'-0"

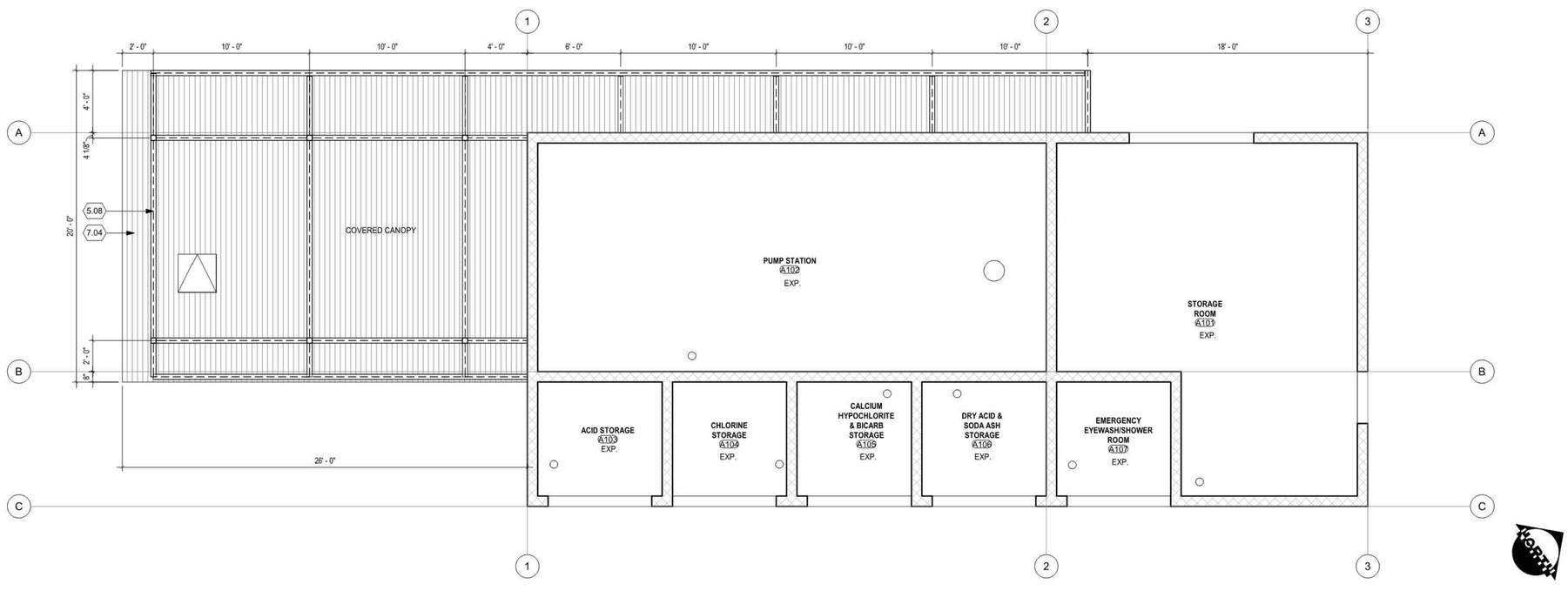

REFLECTED CEILING PLAN | 1 | 1/4" = 1'-0"

KEYNOTES

NO.	Note - Detail
5.08	STEEL BEAM PER STRUCT.
7.01	PVC MEMBRANE ROOFING SYSTEM O/ RIGID INSULATION
7.02	TAPERED RIGID INSULATION CRICKET
7.03	MINIMUM 36"x36" CLR. ROOF HATCH OPENING WITH REMOVABLE FIBER GLASS COVER, CURB MOUNTED
7.04	SHADE STRUCTURE - CORRUGATED METAL OVER STEEL FRAMING PER STRUCT.
7.08	ROOF DRAIN AND OVERFLOW DRAIN
7.14	PARAPET CAP
15.03	HEATER VENT PENETRATION PER SHEET M2.0
15.04	EXHAUST FAN PENETRATION PER SHEET M2.0

ROOF NOTE:
USE TREMCO ROOFING (MEMBRANE SYSTEM). CONTACT: DANIEL GILDAY. DGILDAY@TREMCOINC.COM

CITY OF SANTA CLARITA
BUILDING & SAFETY
APPROVED
Under SCMC Titles 18, 19, 20, 21, 24, 25
Sep 16, 2025
F. Svendsen
BLD25-00576 (ARCH)
The approved plans must be available at the construction site at all times. Changes or alterations to approved plans shall not be made without written permission from the City of Santa Clarita Building & Safety Division. The approval of these plans shall not be construed to permit or approve any violation of the applicable codes, ordinances, or other laws.

PACE
Advanced Water Engineering
17520 Newhope Street, Suite 200 | Fountain Valley, CA 92708
P: (714) 481-7300 | www.pacewater.com

100% CD FOR REVIEW

REVIEWED BY: Luis Trujillo PM- DESIGN	09/30/2025	EXECUTION DATE
REVIEWED BY: Victor Sanchez PM- CONSTRUCTION	09/30/2025	EXECUTION DATE

IN ACCORDANCE WITH RESOLUTION No. 19-6, AS A RESOLUTION OF THE CITY COUNCIL OF THE CITY OF SANTA CLARITA DELEGATING DISCRETIONARY AUTHORITY TO THE DIRECTOR OF PUBLIC WORKS, DIRECTOR OF RECREATION AND COMMUNITY SERVICES, DIRECTOR OF NEIGHBORHOOD SERVICES, CITY ENGINEER, AND ASSISTANT CITY ENGINEERS TO APPROVE PLANS AND DESIGNS FOR THE CONSTRUCTION OF OR IMPROVEMENTS TO PUBLIC PROPERTY FOR PURPOSES OF DESIGN IMMUNITY PURSUANT TO GOVERNMENT CODE SECTION 830.6 FOR THE CITY OF SANTA CLARITA, I DO HEREBY EXERCISE THE DISCRETION VESTED TO ME AND APPROVE THE PLAN OR DESIGN, OR A CONSTRUCTION OR MODIFICATION TO THE PLAN OR DESIGN, OR A CONSTRUCTION OF, OR AN IMPROVEMENT TO THE PUBLIC FACILITY, STRUCTURE, OR PROPERTY TO WHICH THIS STATEMENT, MY SIGNATURE AND DATE IS AFFIXED.

100% CD FOR REVIEW
REGISTERED ARCHITECT
MICHAEL ANGELO CUSANO
C-28045
EXP. DEC. 31, 2025
STATE OF CALIFORNIA

PREPARED BY Approver	
PROJECT ARCHITECT C-28045	
EXP: 12.31.25	
DRAWN BY Author	SCALE 1/4" = 1'-0"
DESIGNED BY Designer	
CHECKED BY Checker	DATE SEPT. 2025

TITLE
ROOF AND REFLECTED CEILING PLAN

C258
NEWHALL PARK POOL
PUMP ROOM RENOVATION
PLANS (100% CD)
SANTA CLARITA CA

SHEET
A1.2
16 OF 61 SHEETS

JOB NO. C258

R:\C258\Engineering\C258-04 (100% CD)\sheets\C258-04 A1.2 ROOF AND REFLECTED CEILING PLAN.dwg — Tab: 16 — by jsendergast on 09/29/25 at 1:18:45 PM
Docusign Envelope ID: F28B5F90-223C-42A7-9ED1-46868B542361
Xrefs: C258 Titleblock.dwg
Dimscale = 1; LTscale = 1; PSltscale = 1; ACAD Ver. = 23.0s (LMS Tech); Visretain = 1

Sep. 29, 2025

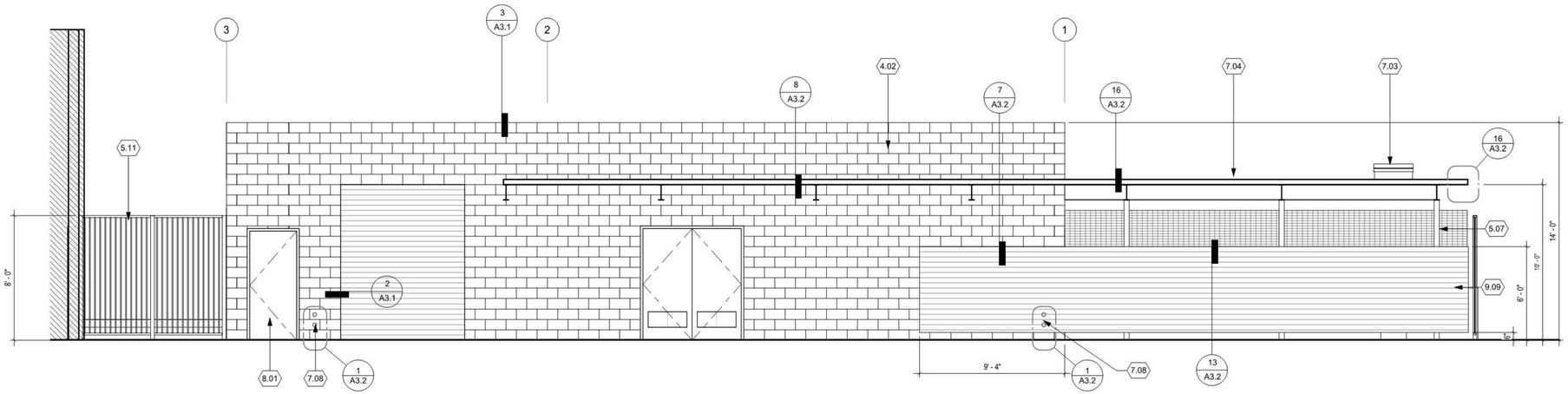

NORTH ELEVATION | 3 | 1/4" = 1'-0"

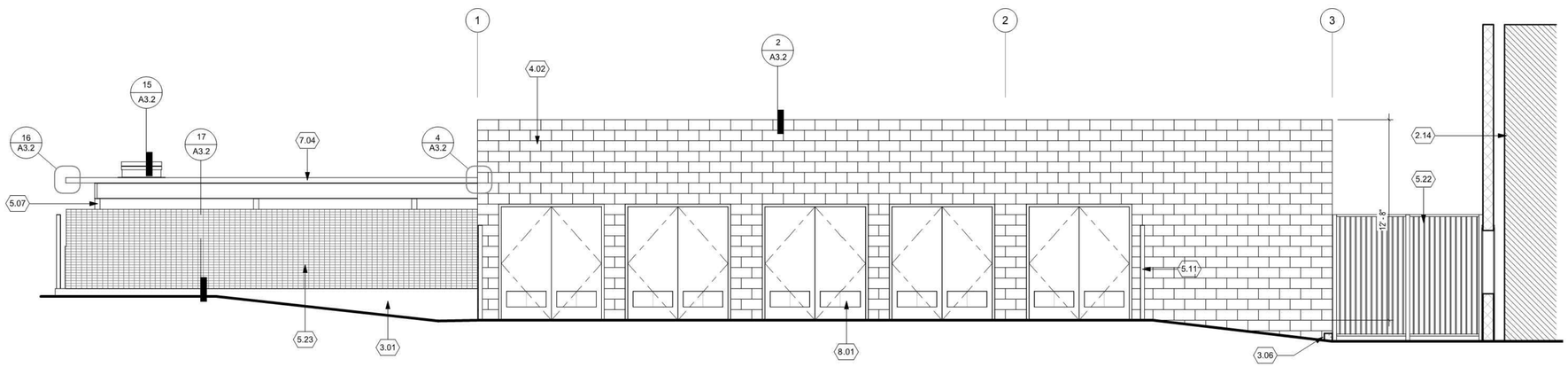

SOUTH ELEVATION | 2 | 1/4" = 1'-0"

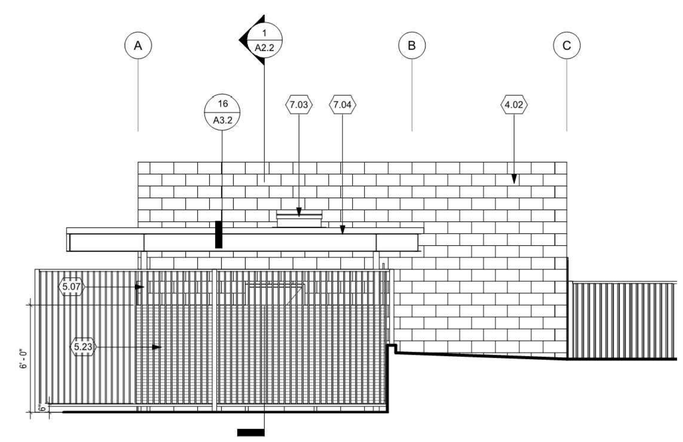

WEST ELEVATION | 1 | 1/4" = 1'-0"

KEYNOTES

NO.	Note - Detail
2.14	(E) BUILDING
3.01	RETAINING WALL (SEE STRUCT)
3.06	CONCRETE CURB (SEE STRUCT)
4.02	CMU BLOCK WALL - SPLIT-FACED BLOCK
5.07	STEEL COLUMN PER STRUCT.
5.11	8' HIGH WROUGHT IRON FENCE PANEL PER SHEET C1.0
5.22	8' HIGH WROUGHT IRON GATE PER SHEET C1.0
5.23	VINYL MESH SCREEN
7.03	MINIMUM 36"x36" CLR. ROOF HATCH OPENING WITH REMOVABLE FIBER GLASS COVER, CURB MOUNTED
7.04	SHADE STRUCTURE - PER SHEET C3.2, DETAIL 16
7.08	ROOF DRAIN AND OVERFLOW DRAIN
8.01	HOLLOW MTL DOOR & FRAME - PAINTED
9.09	FIBER-CEMENT SIDING

CITY OF SANTA CLARITA
BUILDING & SAFETY
APPROVED
Under SCMC Titles 18, 19, 20, 21, 24, 25
Sep 16, 2025
F. Svendsen
BLD25-00576 (ARCH)
The approved plans must be available at the construction site at all times. Changes or alterations to approved plans shall not be made without written permission from the City of Santa Clarita Building & Safety Division. Approval of these plans shall not be construed to permit or approve any violation of the applicable codes, ordinances, or other laws.

PACE
Advanced Water Engineering
17520 Newhope Street, Suite 200 | Fountain Valley, CA 92708
P: (714) 481-7300 | www.pacewater.com

100% CD FOR REVIEW

REVIEWED BY	EXECUTION DATE
Luis Trujillo PM - DESIGN	09/30/2025
Victor Alvarez PM - CONSTRUCTION	09/30/2025

IN ACCORDANCE WITH RESOLUTION No. 19-6, AS A RESOLUTION OF THE CITY COUNCIL OF THE CITY OF SANTA CLARITA DELEGATING DISCRETIONARY AUTHORITY TO THE DIRECTOR OF PARKS, RECREATION AND COMMUNITY SERVICES, DIRECTOR OF PUBLIC WORKS, DIRECTOR OF NEIGHBORHOOD SERVICES, CITY ENGINEER AND ASSISTANT CITY ENGINEERS TO APPROVE PLANS AND DESIGNS FOR THE CONSTRUCTION OF OR IMPROVEMENTS TO PUBLIC PROPERTY FOR PURPOSES OF DESIGN IMMUNITY PURSUANT TO GOVERNMENT CODE SECTION 830.6 FOR THE CITY OF SANTA CLARITA, I DO HEREBY EXERCISE THE DISCRETION DELEGATED TO ME AND APPROVE THE PLAN OR DESIGN, OR A MAJOR OR MODIFICATION TO THE PLAN OR DESIGN, OR A CONSTRUCTION OF, OR AN IMPROVEMENT TO THE PUBLIC FACILITY, STRUCTURE, OR PROPERTY TO WHICH THIS STATEMENT, MY SIGNATURE AND DATE IS AFFIXED.

100% CD FOR REVIEW
LICENSED ARCHITECT
MICHAEL MOSS
C-28045
EXP. DEC. 31, 2025
STATE OF CALIFORNIA

PREPARED BY SQ-1	
PROJECT ARCHITECT	C-28045
EXP:	12.31.25
DRAWN BY SQ-1	SCALE 1/4" = 1'-0"
DESIGNED BY SQ-1	
CHECKED BY SQ-1	DATE SEPT. 2025

TITLE
EXTERIOR ELEVATIONS

C258
NEWHALL PARK POOL
PUMP ROOM RENOVATION
PLANS (100% CD)
SANTA CLARITA CA

SHEET A2.1
17 OF 61 SHEETS
JOB NO. C258

R:\C258\Engineering\C258-04 (100% CD)\Sheets\C258-04 A2.1 EXTERIOR ELEVATIONS.dwg - Tab: 17 - by jpenderghast on 09/29/25 at 1:21:01 PM

Docusign Envelope ID: F28B5F90-223C-42A7-9ED1-4686B9540361

Xrefs: C258 Titleblock.dwg
Dimscale = 1, LTscale = 1, PSltscale = 1, ACAD Ver. = 23.0s (LMS Tech), Visretain = 1

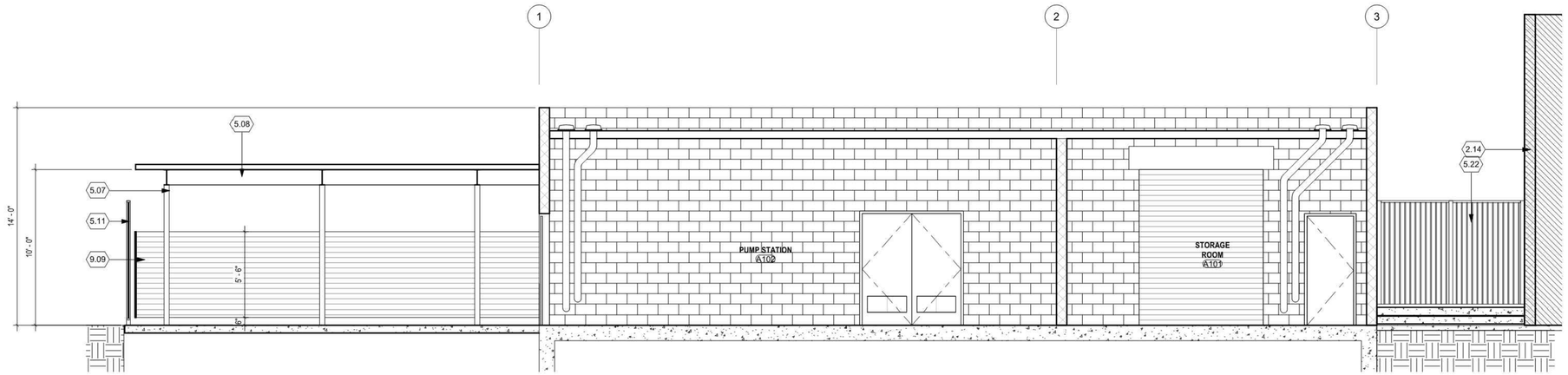

BUILDING SECTION - A | 1 | 1/4" = 1'-0"

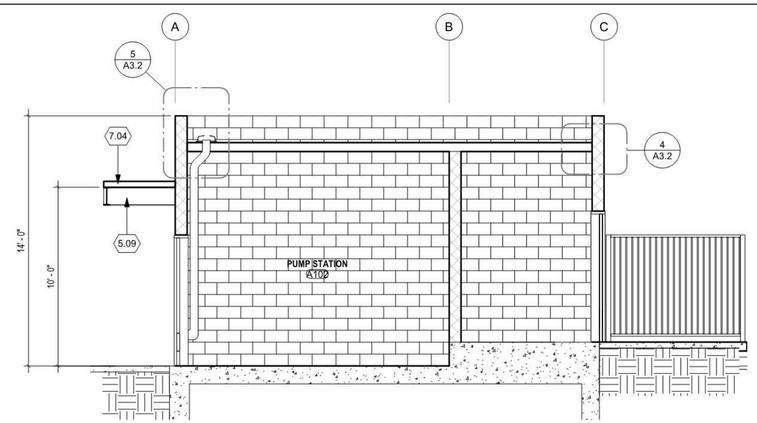

BUILDING SECTION - B | 2 | 1/4" = 1'-0"

KEYNOTES

NO.	Note - Detail
2.14	(E) BUILDING
5.07	STEEL COLUMN PER STRUCT.
5.08	STEEL BEAM PER STRUCT.
5.09	EXPOSED STRUCT STEEL
5.11	8' HIGH WROUGHT IRON FENCE PANEL PER SHEET C1.0
5.22	8' HIGH WROUGHT IRON GATE PER SHEET C1.0
7.04	SHADE STRUCTURE - PER SHEET C3.2, DETAIL 16
9.09	FIBER-CEMENT SIDING

CITY OF SANTA CLARITA
BUILDING & SAFETY
APPROVED
Under SCMC Titles 18, 19, 20, 21, 24, 25
Sep 16, 2025
F. Svendsen
BLD25-00576 (ARCH)
The approved plans must be available at the construction site at all times. Changes or alterations to approved plans shall not be made without written permission from the City of Santa Clarita Building & Safety Division. Approval of these plans shall not be construed to permit or approve any violation of the applicable codes, ordinances, or other laws.

PACE
Advanced Water Engineering
17520 Newhope Street, Suite 200 | Fountain Valley, CA 92708
P: (714) 481-7300 | www.pacewater.com

100% CD FOR REVIEW

REVIEWED BY: Luis Trujillo, PM - DESIGN	09/30/2025 EXECUTION DATE
REVIEWED BY: Vince Hernandez, PM - CONSTRUCTION	09/30/2025 EXECUTION DATE

IN ACCORDANCE WITH RESOLUTION No. 19-6, AS A RESOLUTION OF THE CITY COUNCIL OF THE CITY OF SANTA CLARITA DELEGATING DISCRETIONARY AUTHORITY TO THE DIRECTOR OF PUBLIC WORKS, DIRECTOR OF RECREATION AND COMMUNITY SERVICES, DIRECTOR OF NEIGHBORHOOD SERVICES, CITY ENGINEER, AND ASSISTANT CITY ENGINEERS TO APPROVE PLANS AND DESIGNS FOR THE CONSTRUCTION OF OR IMPROVEMENTS TO PUBLIC PROPERTY FOR PURPOSES OF DESIGN IMMUNITY PURSUANT TO GOVERNMENT CODE SECTION 830.6 FOR THE CITY OF SANTA CLARITA, I DO HEREBY EXERCISE THE DISCRETION DELEGATED TO ME AND APPROVE THE PLAN OR DESIGN, OR AN AMENDMENT OR MODIFICATION TO THE PLAN OR DESIGN, OR A CONSTRUCTION, OF, OR AN IMPROVEMENT TO THE PUBLIC FACILITY, STRUCTURE, OR PROPERTY TO WHICH THIS STATEMENT, MY SIGNATURE AND DATE IS AFFIXED.

100% CD FOR REVIEW
REGISTERED ARCHITECT
MICHAEL MCGRAW
C-28045
EXP. DEC 31, 2025
STATE OF CALIFORNIA

PREPARED BY Approver	
PROJECT ARCHITECT	C-28045
EXP:	12.31.25
DRAWN BY Author	SCALE 1/4" = 1'-0"
DESIGNED BY Designer	
CHECKED BY Checker	DATE SEPT 2025

TITLE
BUILDING SECTIONS

C258
NEWHALL PARK POOL
PUMP ROOM RENOVATION
PLANS (100% CD)
SANTA CLARITA CA

SHEET
A2.2
18 OF 61 SHEETS

JOB NO. C258

Sep. 29, 2025
Docusign Envelope ID: F28B5F90-223C-42A7-9ED1-4886B8540361
Xrefs: C258 Titleblock.dwg
Dimscale = 1, LTscale = 1, PSltscale = 1, ACAD Ver. = 23.0s (LMS Tech), Visretain = 1
R:\C258\Engineering\C258-04 (100% CD)\sheets\C258-04 A2.2 BUILDING SECTIONS.dwg - Tab: 18 - by jpenterghost on 09/29/25 at 1:21:35 PM

Sep. 29, 2025

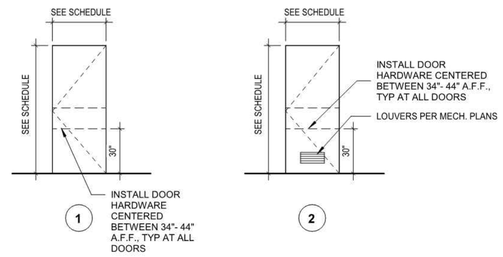

DOOR TYPES 12
1/4" = 1'-0"

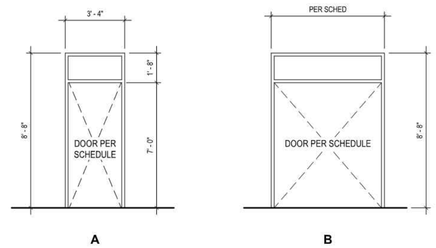

DOOR FRAME TYPES 11
1/4" = 1'-0"

DOOR SCHEDULE

DOOR						FRAME						
	SIZE								DETAILS [A3.1]			
#	WIDTH	HEIGHT	TYPE	MAT	FIN	TYPE	MAT	FIN	HEAD	JAMB	SILL	REMARKS
101	3' - 0"	7' - 0"	1	FIB	PT	A	HM	PT	5	5	1	FIBERGLASS
101R	8' - 0"	10' - 0"	-	ALUM	PT	-	AL	PT	-	2	-	OVERHEAD ROLL-UP
102A	6' - 4"	7' - 2"	2	FIB	PT	B	HM	PT	5	5	1	FIBERGLASS
102B	3' - 0"	7' - 0"	1	FIB	PT	A	HM	PT	5	5	1	FIBERGLASS
103	6' - 4"	7' - 2"	2	FIB	PT	B	HM	PT	5	5	1	FIBERGLASS
104	6' - 4"	7' - 2"	2	FIB	PT	B	HM	PT	5	5	-	FIBERGLASS
105	6' - 4"	7' - 2"	2	FIB	PT	B	HM	PT	5	5	1	FIBERGLASS
106	6' - 4"	7' - 2"	2	FIB	PT	B	HM	PT	5	5	1	FIBERGLASS
107	6' - 4"	7' - 2"	2	FIB	PT	B	HM	PT	5	5	1	FIBERGLASS
108	3' - 0"	7' - 0"	1	FIB	PT	A	HM	PT	5	5	1	FIBERGLASS

DOOR NOTES:
1. AT ALL EXTERIOR DOORS, PROVIDE WEATHERSTRIPPING, 2"+ 4 " ALUMINUM THRESHOLDS, AND ALUMINUM WITH VINYL SWEEP. TYPICAL.
2. VERIFY ALL AS—BUILT OPENING DIMENSIONS AT THE PROJECT SITE PRIOR TO FABRICATION.
3. DOOR SWING SHALL BE EXECUTED AS SHOWN ON THE PLAN.
4. THRESHOLD DETAIL AFFECTS EXTERIOR DOOR HEIGHT, PROVIDER TO VERIFY EACH CONDITION BEFORE DOOR FABRICATION. NO THRESHOLD (AND COMPLEMENTING BOTTOM OF DOOR ACCESSORIES) WILL BE CHANGED DUT TO LACK OF COORDINATION WITH DRAWINGS. APPLY BITUMINOUS COATING TO ALL STEEL SURFACE TO BE IN CONTACT (OR CLOSE PROXIMITY) WITH ALUMINUM.
6. VERIFY KEYING REQUIREMENTS WITH OWNER PRIOR TO INSTALLATION.
7. DOOR STOPS AND SILENCERS SHALL BE PROVIDED AT ALL DOORS—TYP.

HARDWARE SETS

(1) HINGES: 1 1/2" PAIR 4 1/2"x4 1/2" BALL BEARING W/ N.R.P.
EXIT DEVICE: VON DUPRIN—98 SERIES FIRERATED PANIC HDW.
CLOSER: LCN NO.1071

(2) HINGES: 3 PAIR 4 1/2"x4 1/2" BALL BEARING W/ N.R.P.
EXIT DEVICE: VON DUPRIN—98 SERIES FIRERATED PANIC HDW. BOTH LEAFS CYLINDER LOCK KEYED ONE SIDE
CLOSER: LCN NO.1071 BOTH LEAFS

(3) HINGES: 1 1/2" PAIR 4 1/2"x4 1/2" BALL BEARING
LOCK: SCHLAGE NO.D40S-626-RHODES
CLOSER: LCN NO.1071

DOOR SCHEDULE 3

DOOR & WINDOW NOTES

1. ALL EXITS TO BE OPENABLE FROM THE INSIDE WITHOUT THE USE OF KEY AND/OR SPECIAL KNOWLEDGE (U.N.O.). MANUALLY OPERATED EDGE OR SURFACE MOUNTED FLUSH BOLTS AND SURFACE BOLTS ARE PROHIBITED.

2. PAINT STEEL DOORS AND FRAMES WITH ONE (1) COAT RUST INHIBITING PRIMER AND ONE (1) COAT SEMI-GLOSS ALKYD ENAMEL.

3. THE LEVER OF LEVER ACTUATED LATCHES OR LOCKS SHALL BE CURVED WITH A RETURN TO WITHIN ½" INCH OF THE DOOR WITH FINISH PER OWNER'S DIRECTION. VERIFY KEYING WITH OWNER.

4. PROVIDE DOOR STOPS AS REQUIRED AT FLOOR AND/OR WALL.

5. ALL DOORS TO BE MASTER KEYED. VERIFY KEYING WITH OWNER.

6. ALL THRESHOLDS TO BE MAXIMUM HEIGHT OF 1/2" AND 1/4" HIGH MINIMUM SHALL BE BEVELLED WITH A SLOPE NOT STEEPER THAN 1:2.

7. DOOR LOCK AND LATCHES SHALL COMPLY WITH CBC SECTION 1004.3 AND ADA.

8. THE AUTHORITY HAVING JURISDICTION MAY INCREASE THE MAXIMUM EFFORT TO OPERATE FIRE DOORS IN ORDER TO ACHIEVE POSITIVE LATCHING, BUT NOT EXCEEDING THE 15 LB MAX.

9. MAXIMUM EFFORT TO OPERATE EXTERIOR DOORS IS 5 LBS.

10. HAND-ACTIVATED DOOR OPENING HARDWARE SHALL BE CENTERED BETWEEN 30" AND 44" A.F.F.

FINISH LIST

ABBREVIATIONS:

MATERIAL
HM - HOLLOW METAL
FIB - FIBERGLASS

FINISH
PT - PAINT

GLAZING
EXT. - DUAL PANE, INSULATING - FIXED SOLAR COOL BRONZE GLASS

INT. - SINGLE PANE, CLEAR, TEMPERED

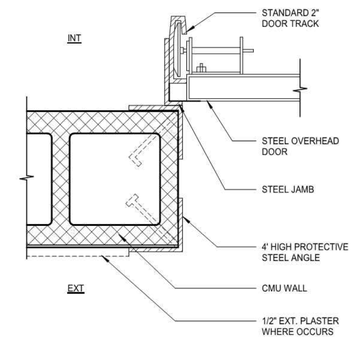

OVERHEAD DOOR JAMB 2
3" = 1'-0"

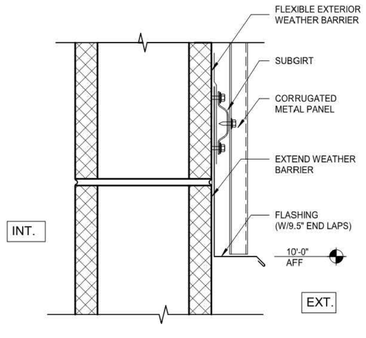

CORRUGATED METAL PANEL AT CMU 3
3" = 1'-0"

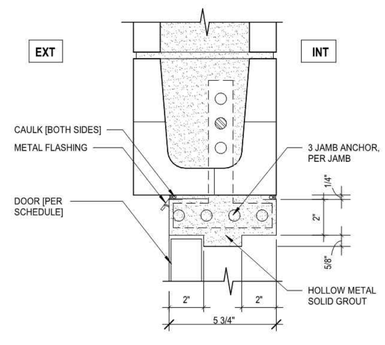

H.M. DOOR HEAD AT CMU (JAMB SIM.) 5
3" = 1'-0"

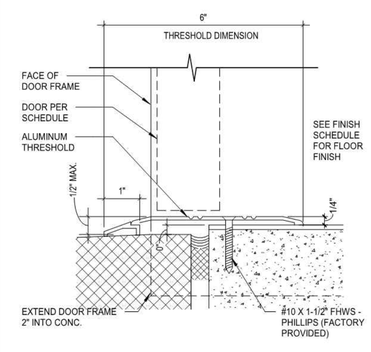

ALUMINUM THRESHOLD AT EXT. DOORS 1
6" = 1'-0"

CITY OF SANTA CLARITA
BUILDING & SAFETY
APPROVED
Under SCMC Titles 18, 19, 20, 21, 24, 25
Sep 16, 2025
F. Svendsen
BLD25-00576 (ARCH)
The approved plans must be available at the construction site at all times. Changes or alterations to approved plans shall not be made without written permission from the City of Santa Clarita Building & Safety Division. The approval of these plans shall not be construed to permit or approve any violation of the applicable codes, ordinances, or other laws.

PACE
Advanced Water Engineering
17520 Newhope Street, Suite 200 | Fountain Valley, CA 92708
P: (714) 481-7300 | www.pacewater.com

100% CD FOR REVIEW

REVIEWED BY: Luke Yoshida PM/ DESIGNER 09/30/2025 EXECUTION DATE
REVIEWED BY: PM - CONSTRUCTION 09/30/2025 EXECUTION DATE

IN ACCORDANCE WITH RESOLUTION No. 19-6, AS A RESOLUTION OF THE CITY COUNCIL OF THE CITY OF SANTA CLARITA DELEGATING DISCRETIONARY AUTHORITY TO THE DIRECTOR OF NEIGHBORHOOD SERVICES, CONSTANT CITY ENGINEERS AND ARCHITECTS, AND THE DIRECTOR OF PUBLIC WORKS, CITY ENGINEERS TO APPROVE PLANS AND DESIGNS FOR THE CONSTRUCTION OF OR IMPROVEMENTS TO PUBLIC PROPERTY FOR PURPOSES OF DESIGN IMMUNITY PURSUANT TO GOVERNMENT CODE SECTION 830.6 FOR THE CITY OF SANTA CLARITA, I DO HEREBY EXERCISE THE DISCRETION DELEGATED TO ME AND APPROVE THE PLANS AND DESIGNS FOR THE MODIFICATION TO THE PLAN OR DESIGN, OR A CONSTRUCTION, OF, OR AN IMPROVEMENT TO THE PUBLIC FACILITY, STRUCTURE, OR PROPERTY TO WHICH THIS STATEMENT, MY SIGNATURE AND DATE IS AFFIXED.

100% CD FOR REVIEW

REGISTERED ARCHITECT SUZANNE QUIGLEY 12/31/2025 STATE OF CALIFORNIA

PREPARED BY SQ-1
PROJECT ARCHITECT C-28045 EXP: 12.31.25
DRAWN BY SQ-1
SCALE As indicated
DESIGNED BY SQ-1
CHECKED BY SQ-1
DATE SEPT. 2025

TITLE
WINDOW DOOR DETAILS AND SCHEDULES

C258
NEWHALL PARK POOL
PUMP ROOM RENOVATION PLANS (100% CD)
SANTA CLARITA CA

SHEET A3.1
19 OF 61 SHEETS
JOB NO. C258

Docusign Envelope ID: F28B5F90-2230-42A7-9ED1-4886B8540361
Xrefs: C258 Titleblock.dwg
Dimscale = 1, LTscale = 1, PSltscale = 1, ACAD Ver. = 23.0s (LMS Tech), Visretain = 1
R:\C258\Engineering\C258-04 (100% CD)\sheets\C258-04 A3.1 WINDOW DOOR DETAILS AND SCHEDULES.dwg - Tab: 19 - by jpenderghast on 09/29/25 at 1:21:44 PM

Sep. 29, 2025

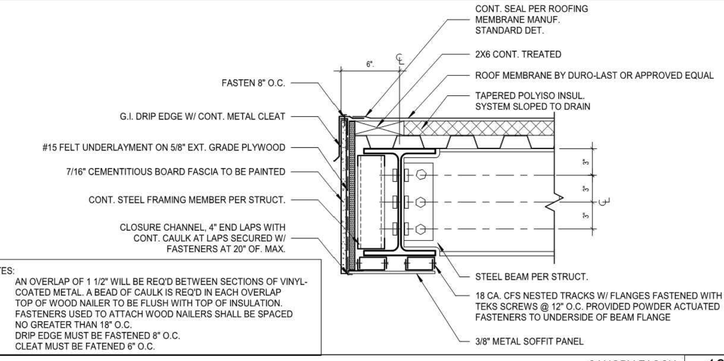

NOTES:
1. AN OVERLAP OF 1 1/2" WILL BE REQ'D BETWEEN SECTIONS OF VINYL-COATED METAL. A BEAD OF CAULK IS REQ'D IN EACH OVERLAP
2. TOP OF WOOD NAILER TO BE FLUSH WITH TOP OF INSULATION. FASTENERS USED TO ATTACH WOOD NAILERS SHALL BE SPACED NO GREATER THAN 18" O.C.
3. DRIP EDGE MUST BE FASTENED 8" O.C.
4. CLEAT MUST BE FATENED 6" O.C.

CANOPY FASCIA | 16 | 1 1/2" = 1'-0"

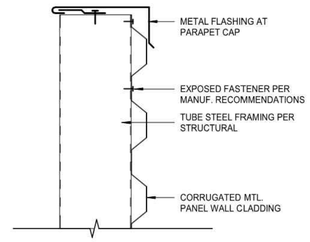

METAL SCREEN AT PARAPET | 12 | 3" = 1'-0"

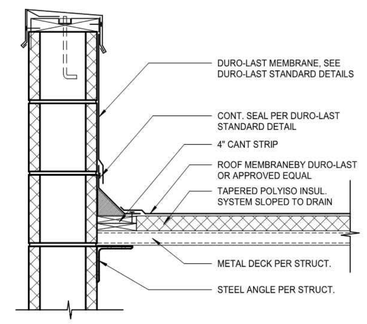

CANOPY @ CMU | 8 | 1 1/2" = 1'-0"

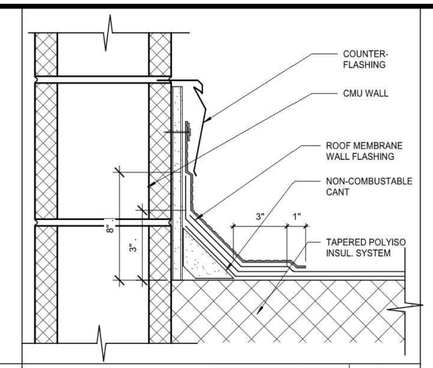

ROOF CRICKET AT CMU | 4 | 3" = 1'-0"

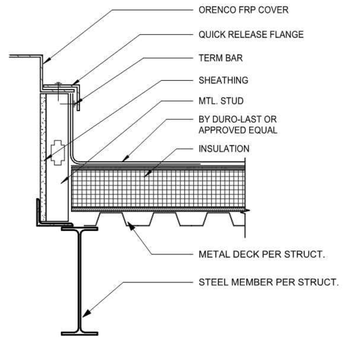

REMOVEABLE FRP PANEL CURB | 15 | 1 1/2" = 1'-0"

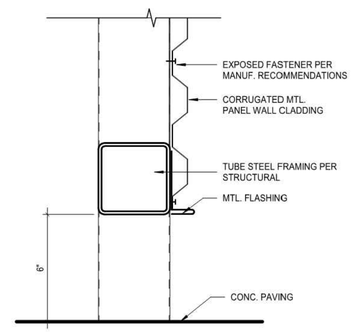

METAL SCREEN AT BASE | 11 | 3" = 1'-0"

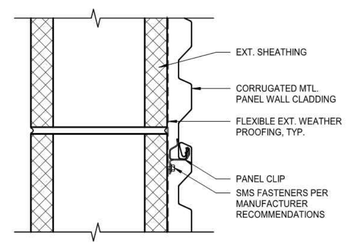

METAL SCREEN PANEL AT CMU WALL | 7 | 3" = 1'-0"

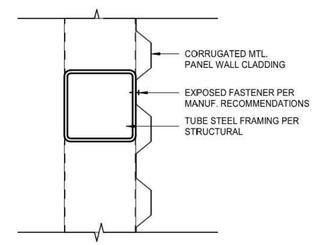

METAL SCREEN PANEL | 3 | 3" = 1'-0"

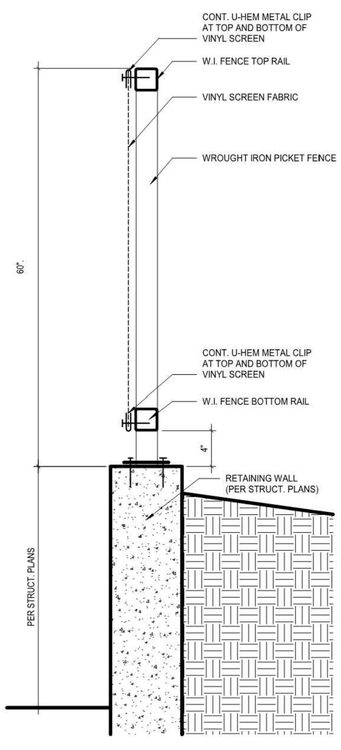

WROUGHT IRON FENCE WITH VINYL SCREEN | 17 | 1 1/2" = 1'-0"

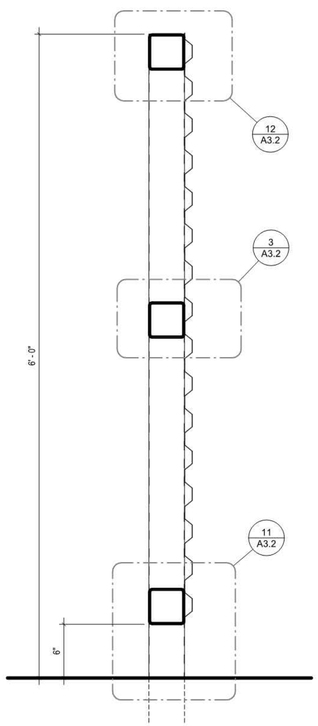

METAL SCREEN - SECTION | 13 | 1 1/2" = 1'-0"

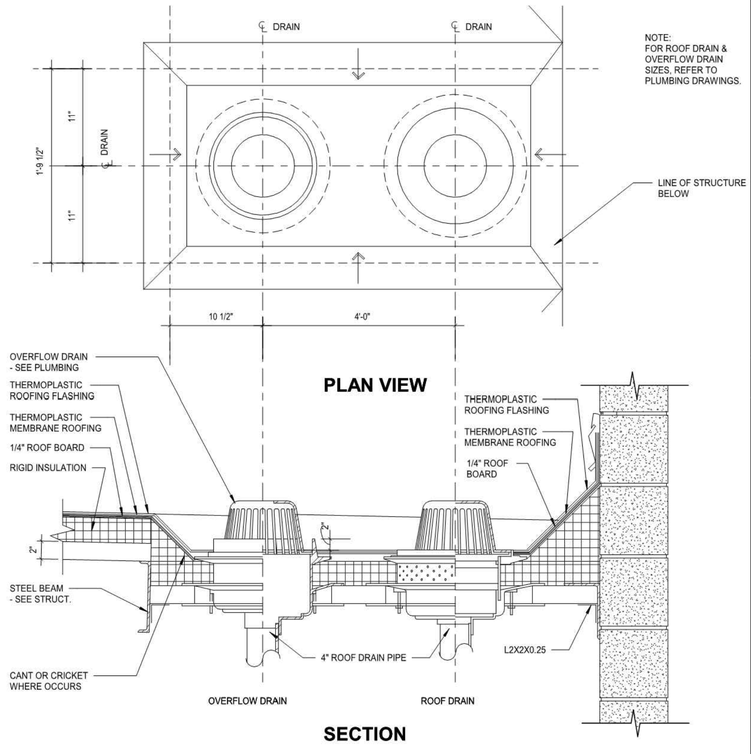

ROOF DRAIN & OVERFLOW DRAIN | 5 | 1 1/2" = 1'-0"

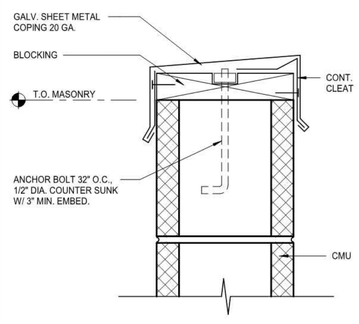

PARAPET CAP DETAIL @ CMU | 2 | 3" = 1'-0"

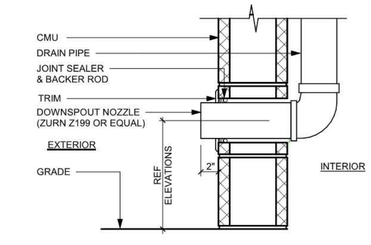

NOTE:
REF PLUMBING FOR MORE INFORMATION

DOWNSPOUT NOZZLE @ CMU WALL | 1 | 1 1/2" = 1'-0"

CITY OF SANTA CLARITA BUILDING & SAFETY
APPROVED
Under SCMC Titles 18, 19, 20, 21, 24, 25
Sep 16, 2025
F. Svendsen
BLD25-00576 (ARCH)
The approved plans must be available at the construction site at all times. Changes or alterations to approved plans shall not be made without written permission from the City of Santa Clarita Building & Safety Division. The approval of these plans shall not be construed to permit or approve any violation of the applicable codes, ordinances, or other laws.

PACE
Advanced Water Engineering
12520 Newhope Street, Suite 200 | Fountain Valley, CA 92708
P: (714) 481-7300 | www.pacewater.com

100% CD FOR REVIEW

REVIEWED BY: Lydia Tripoli PM - DESIGN	09/30/2025 EXECUTION DATE
REVIEWED BY: Vincent Nguyen PM - CONSTRUCTION	09/30/2025 EXECUTION DATE

IN ACCORDANCE WITH RESOLUTION No. 19-6, AS A RESOLUTION OF THE CITY COUNCIL OF THE CITY OF SANTA CLARITA DELEGATING DISCRETIONARY AUTHORITY TO THE DIRECTOR OF PUBLIC WORKS, DIRECTOR OF RECREATION AND COMMUNITY SERVICES, CITY ENGINEER, BUILDING OFFICIAL, CITY BUILDER, AND ASSISTANT CITY ENGINEERS TO APPROVE PLANS AND DESIGNS FOR THE CONSTRUCTION OF IMPROVEMENTS TO PUBLIC PROPERTY FOR PURPOSES OF DESIGN IMMUNITY PURSUANT TO GOVERNMENT CODE SECTION 830.6 FOR THE CITY OF SANTA CLARITA, I DO HEREBY EXERCISE THE DISCRETION DELEGATED TO ME AND APPROVE THE PLAN OR DESIGN, OR A CONSTRUCTION, OR AN MODIFICATION TO THE PLAN OR DESIGN, OR A CONSTRUCTION OF, OR AN IMPROVEMENT TO THE PUBLIC FACILITY, STRUCTURE, OR PROPERTY TO WHICH THIS STATEMENT, MY SIGNATURE AND DATE IS AFFIXED.

100% CD FOR REVIEW

LICENSED ARCHITECT MICHAEL SCOTT SVENDSEN C-28045 EXP. DEC 31, 2025 STATE OF CALIFORNIA

PREPARED BY SQ-1	PROJECT ARCHITECT C-28045 EXP: 12.31.25
DRAWN BY SQ-1	SCALE As indicated
DESIGNED BY SQ-1	
CHECKED BY SQ-1	DATE SEPT. 2025

TITLE: ROOF DETAILS

C258 NEWHALL PARK POOL
PUMP ROOM RENOVATION
PLANS (100% CD)
SANTA CLARITA CA

SHEET A3.2
20 OF 61 SHEETS

JOB NO. C258

Docusign Envelope ID: F28B5F90-223C-42A7-9ED1-4886B54D361
Xrefs: C258 Titleblock.dwg
Dimscale = 1, LTscale = 1, PSltscale = 1, ACAD Ver. = 23.0s (LMS Tech), Visretain = 1
R:\C258\Engineering\C258-04 (100% CD)\sheets\C258-04 A3.2 ROOF DETAILS.dwg - Tab: 28 - by pierceingrost on 09/29/25 at 1:06:39 PM

Sep. 29, 2025

GENERAL

1. MATERIALS AND WORKMANSHIP SHALL CONFORM TO THE 2022 EDITION OF THE CALIFORNIA BUILDING CODE, TITLE 24, THE ORDINANCES OF THE LOCAL BUILDING OFFICIAL, AND THE REQUIREMENTS OF THE CONTRACT DOCUMENTS.
2. REFERENCE TO CODES, RULES REGULATIONS, STANDARDS, MANUFACTURER'S INSTRUCTIONS OR REQUIREMENTS OF REGULATORY AGENCIES IS TO THE LATEST EDITION OF EACH IN EFFECT AT THE DATE OF SUBMISSION OF BID UNLESS THE DOCUMENT DATE IS SHOWN.
3. DRAWINGS INDICATE GENERAL AND TYPICAL DETAILS OF CONSTRUCTION. WHERE CONDITIONS ARE NOT SPECIFICALLY INDICATED BUT ARE OR SIMILAR CHARACTER TO DETAILS SHOWN, USE SIMILAR DETAILS OF CONSTRUCTION, SUBJECT TO REVIEW BY THE STRUCTURAL ENGINEER OF RECORD (SEOR).
4. DETAILS ON SHEETS TITLED "TYPICAL DETAILS" APPLY TO SITUATIONS OCCURRING ON THE PROJECT THAT ARE THE SAME OF SIMILAR TO THOSE SPECIFICALLY REFERENCED. SUCH DETAILS ARE NOT NOTED AT EACH LOCATION THAT THEY OCCUR.
5. SEE ARCHITECTURAL, MECHANICAL/PLUMBING/ELECTRICAL AND VENDOR DRAWINGS FOR ADDITIONAL INFORMATION.
6. SEE ARCHITECTURAL DRAWINGS FOR SIZE AND LOCATION OF FLOOR, ROOF AND WALL OPENINGS NOT SHOWN ON THE STRUCTURAL DRAWINGS. COORDINATE THE SIZE AND LOCATION OF OPENINGS ASSOCIATED WITH, BUT NOT LIMITED TO, ELECTRICAL, MECHANICAL AND PLUMBING TRADES. DO NOT CUT ANY STRUCTURAL MEMBER FOR PIPES, DUCTS, ETC. UNLESS SPECIFICALLY INDICATED. SUBMIT FINAL SIZING AND LOCATION REQUIREMENTS OF OPENINGS TO THE OWNER'S REPRESENTATIVE FOR REVIEW. DO NOT CUT, DRILL, CORE OR NOTCH STRUCTURAL ELEMENTS INCLUDING, BUT NOT LIMITED TO, ROOF, FLOOR, WALL AND FOUNDATION FRAMING UNLESS SPECIFICALLY DETAILED ON APPROVED PLANS OR OTHERWISE APPROVED BY THE SEOR.
7. VERIFY ALL DIMENSIONS, ELEVATIONS AND SITE CONDITIONS BEFORE STARTING WORK. NOTIFY THE ARCHITECT OF RECORD (AOR) OF DISCREPANCIES.
8. DO NOT SCALE THE DRAWINGS.
9. TOLERANCES SHALL BE ACCORDING TO THE BUILDING CODE.
10. THE CONTRACTOR IS RESPONSIBLE FOR COORDINATING THE WORK OF ALL TRADES. NOTIFY THE AOR OF ANY DISCREPANCIES AND RESOLVE BEFORE PROCEEDING WITH THE WORK.
11. PROVIDE MEASURES NECESSARY TO PROTECT THE STRUCTURE DURING CONSTRUCTION. SUCH MEASURES INCLUDE, BUT MAY NOT BE LIMITED TO, BRACING AND SHORING FOR LOADS DURING CONSTRUCTION. RETAIN A REGISTERED CIVIL ENGINEER WHOM IS PROPERLY QUALIFIED TO DESIGN BRACING, SHORING, ETC. VISITS TO THE SITE BY THE OWNER'S REPRESENTATIVE WILL NOT INCLUDE OBSERVATION OF THE ABOVE NOTED ITEMS.
12. THE CONTRACTOR SHALL SUPERVISE, DIRECT THE WORK AND SHALL BE SOLELY RESPONSIBLE FOR ALL CONSTRUCTION MEANS, METHODS, TECHNIQUES, SEQUENCES AND PROCEDURES. THE SUPPORTING SERVICES BY THE SEOR, WHETHER PERFORMED PRIOR TO, DURING, OR AFTER CONSTRUCTION, ARE PERFORMED SOLELY FOR THE PURPOSE OF ASSISTING IN QUALITY CONTROL AND IN ACHIEVING CONFORMANCE WITH CONTRACT DRAWINGS; BUT THEY DO NOT GUARANTEE THE CONTRACTOR'S PERFORMANCE AND SHALL NOT BE CONSIDERED AS SUPERVISION OF CONSTRUCTION.
13. CONSTRUCTION LOADS: EVENLY DISTRIBUTE STORED MATERIALS ON FLOORS AND ROOFS. DO NOT EXCEED ALLOWABLE LOADING FOR SUPPORTING MEMBERS AND CONNECTIONS.
14. THE CONTRACTOR IS SOLELY RESPONSIBLE FOR PROVIDING A SAFE PLACE TO WORK AND MEETING THE REQUIREMENTS OF ALL APPLICABLE JURISDICTIONS. EXECUTE WORK TO ENSURE THE SAFETY OF PERSONS AND ADJACENT PROPERTY AGAINST DAMAGE BY FALLING DEBRIS AND OTHER HAZARDS RELATED WITH THIS WORK.
15. CONCRETE SLAB ON GRADE HAS NOT BEEN DESIGNED BY THE SEOR FOR THE FOLLOWING:
    A. ANY CONSTRUCTION LOADS (I.E. CRANES, CONCRETE TRUCKS OR ETC.)
    B. ANY SPECIFIC OCCUPANT SERVICE LOADS (I.E. FORKLIFTS, STORAGE RACKS OR ETC.
16. SHOP DRAWINGS SHALL BE SUBMITTED TO THE SEOR FOR APPROVAL PRIOR TO FABRICATION. SEOR REQUIRES 5 TO 10 WORKING DAYS FROM WHEN THE SHOP DRAWINGS ARE RECEIVED UNTIL THE TIME THEY ARE SENT OUT OF THE OFFICE. SHOP DRAWINGS WILL BE REJECTED FOR INCOMPLETENESS OR CHANGES WITHOUT PRE-APPROVAL.

DESIGN CRITERIA

1. THE OBJECTIVE OF THIS WORK IS TO DESIGN A ONE-STORY CMU BUILDING WITH ADJACENT STEEL CANOPY. SCOPE ALSO INCLUDES THE REPAIR OF THE EXISTING CONCRETE LID OF THE SURGE TANK.
2. DESIGN LOAD CRITERIA:

GRAVITY LOADS	
DEAD LOADS	ACTUAL BUILDING AND OPERATING EQUIPMENT WEIGHTS
ROOF LIVE LOAD	20 PSF (REDUCIBLE)
TYPICAL FLOOR LIVE LOAD	100 PSF (SURGE TANK LID)
ULTIMATE WIND LOADS	
RISK CATEGORY	II (TABLE 1604.5)
EXPOSURE CATEGORY	C
INTERNAL PRESSURE COEFFICIENT, GC_{PI}	±0.18 PER TABLE 26.13-1 (ENCLOSED)
DESIGN WIND SPEED, V_{ULT}, V_{ASD}	94 MPH PER ATC TOOL, 73 MPH PER CBC EQN 16-17
ULTIMATE SEISMIC LOADS (STRUCTURE)	
IMPORTANCE FACTOR, I_E	1.0 (RISK CATEGORY II, CBC TABLE 1604.5)
MAPPED SPECTRAL ACCELERATIONS (PER GEOTECHNICAL REPORT, TABLE 1)	S_S= 2.65g, S_1= 1.99g
SITE CLASS	D
DESIGN SPECTRAL RESPONSE COEFFICIENTS	S_{DS}= 1.77g, S_{D1}= 1.32g
SEISMIC DESIGN CATEGORY	E
BASIC SEISMIC-FORCE RESISTING SYSTEM(S)	BUILDING: SPECIAL REINFORCED MASONRY SHEAR WALLS (BEARING) CANOPY: STEEL SPECIAL CANTILEVER COLUMNS (N-S DIRECTION)
RESPONSE MODIFICATION FACTOR(S), R	BUILDING: 5, CANOPY: 2½ (N-S DIRECTION)
OVERSTRENGTH FACTOR, Ω_0	BUILDING: 2 (SEE ASCE 7, TABLE 12.2-1, FOOTNOTE 'b' CANOPY: 1¼ (N-S DIRECTION)
DEFLECTION AMPLIFICATION FACTOR, C_D	BUILDING: 3½, CANOPY: 2½ (N-S DIRECTION)
SEISMIC RESPONSE COEFFICIENT, C_S	BUILDING: 0.35, CANOPY: 0.71
BASE SHEAR, V	34 KIPS (N-S), 46 KIPS (E-W)
ANALYSIS PROCEDURE	EQUIVALENT LATERAL FORCE (ASCE 7, SECTION 12.8)
REDUNDANCY FACTOR, ρ	1.0
ULTIMATE SEISMIC LOADS (COMPONENTS)	
IMPORTANCE FACTOR, I_P	1.0 (RISK CATEGORY II, CBC TABLE 1604.5)
COMPONENT AMPLIFICATION FACTOR, a_p	PER DETAILS
COMPONENT RESPONSE MOD FACTOR, R_p	PER DETAILS
SEISMIC HEIGHT RATIO, z/h	FLOOR: 0.0, ROOF: 1.0

3. FOUNDATIONS (BASED ON GEOTECHNICAL REPORT):

FOOTING TYPE	ALLOWABLE NET PRESSURE, D+L (PSF)	MIN. W x H (IN)
TYPICAL	2,000	16x24

   A. ALLOWABLE COEFFICIENT OF FRICTION: 0.45
   B. ALLOWABLE PASSIVE PRESSURE: 200 PCF
   C. FRICTION AND PASSIVE PRESSURE MAY BE COMBINED IN CALCULATION OF TOTAL RESISTANCE TO SLIDING.
   D. A ONE-THIRD INCREASE IS APPLICABLE FOR WIND/SEISMIC LOADING.
   E. OVEREXCAVATION AND RECOMPACTION ARE REQUIRED (SEE FOUNDATION PLAN AND GEOTECHNICAL REPORT FOR ADDITIONAL INFORMATION.

5. ULTIMATE WIND PRESSURES FOR COMPONENTS & CLADDING (ASCE7, CH. 30, PART 1):
   A. BUILDING WALL ELEMENTS (ASCE 7, FIGURE 30.3-1):

TRIBUTARY AREA	ZONE 4 (TYPICAL) (PSF)		ZONE 5 (CORNER) (PSF)	
10 SF	+18.9	-20.5	+18.9	-25.2
20 SF	+18.1	-19.7	+18.1	-23.7
50 SF	+17.3	-18.9	+17.3	-21.3
100 SF	+15.8	-18.1	+15.8	-19.7
200 SF	+15.8	-17.3	+15.8	-18.1
≥ 500 SF	+14.2	-15.8	+14.2	-15.8

   B. BUILDING ROOF ELEMENTS (ASCE 7, FIGURE 30.4-2A):

TRIBUTARY AREA	TYPICAL + (PSF)	ZONE 1 – (PSF)	ZONE 1' - (PSF)	ZONE 2 – (PSF)	ZONE 3 - (PSF)
10 SF	+8.4	-32.9	-18.9	-43.5	-59.2
20 SF	+7.5	-31.2	-18.9	-40.8	-54.0
50 SF	+6.7	-27.7	-18.9	-36.4	-46.1
≥ 100 SF	+6.7	-25.9	-18.9	-34.7	-40.8

   C. CANOPY ROOF ELEMENTS (ASCE 7, FIGURE 30.11-1B):

TRIBUTARY AREA	TYPICAL + (PSF)	TYPICAL – (PSF)
10 SF	+15.8	-15.8
20 SF	+15.3	-15.3
50 SF	+13.8	-13.8
≥ 100 SF	+11.4	-11.4

EXISTING CONSTRUCTION/ RETROFIT

1. THE CONTRACTOR SHALL REMOVE ALL INTERFERING ITEMS FOR NEW CONSTRUCTION AND SHALL REPAIR OR REPLACE ALL REMOVED ITEMS TO MATCH THE EXISTING CONDITIONS IN ACCORDANCE WITH THE ARCHITECTURAL DRAWINGS.
2. INFORMATION SHOWN ON THE DRAWINGS RELATED TO EXISTING CONDITIONS REPRESENTS THE PRESENT KNOWLEDGE, BUT WITHOUT GUARANTEE OF ACCURACY. REPORT CONDITIONS THAT CONFLICT WITH THE CONTRACT DOCUMENTS TO THE AOR AND SEOR. DO NOT DEVIATE FROM THE CONTRACT DOCUMENTS WITHOUT WRITTEN DIRECTION FROM THE AOR AND/ OR SEOR.

SOILS AND FOUNDATIONS

1. THE DESIGN OF THE FOUNDATION SYSTEM IS BASED UPON THE CRITERIA AND RECOMMENDATIONS CONTAINED IN THE FOLLOWING GEOTECHNICAL INVESTIGATION REPORT:
   A. "GEOTECHNICAL INVESTIGATION REPORT, NEWHALL PARK POOL PUMP ROOM REPLACEMENT PROJECT, 24923 NEWHALL AVENUE, SANTA CLARITA, CALIFORNIA" BY AMERICAN GEOTECHNICAL, INC. DATED 06.03.24 (FILE No. 60448-01).
2. LOCATE AND PROTECT EXISTING UTILITIES TO REMAIN DURING AND/OR AFTER CONSTRUCTION.
3. REMOVE ABANDONED FOOTINGS, UTILITIES, ETC. WHICH INTERFERE WITH NEW CONSTRUCTION, UON.
4. NOTIFY THE AOR AND SEOR IF ANY BURIED STRUCTURES NOT INDICATED, SUCH AS CESSPOOLS, CISTERNS, FOUNDATIONS, ETC. ARE FOUND.
5. THE CONTRACTOR IS SOLELY RESPONSIBLE FOR EXCAVATION PROCEDURES INCLUDING LAGGING, SHORING, UNDERPINNING AND PROTECTION OF EXISTING CONSTRUCTION.
6. REMOVE LOOSE SOIL AND STANDING WATER FROM FOUNDATION EXCAVATIONS PRIOR TO PLACING CONCRETE.
7. BOTTOM OF FOOTINGS SHALL BE LEVEL. FOOTING ELEVATION CHANGES SHALL BE MADE USING FOOTING STEPS.
8. EXCAVATIONS FOR FOUNDATIONS MUST BE ACCEPTED BY THE GEOTECHNICAL ENGINEER OF RECORD (GEOR) PRIOR TO PLACING REINFORCING AND CONCRETE. NOTIFY THE GEOR WHEN EXCAVATIONS ARE READY FOR INSPECTION.
9. MECHANICALLY COMPACT EXCAVATION BACKFILLS IN LAYERS. PROVIDE 90% MINIMUM COMPACTION IN ACCORDANCE WITH THE ASTM D1557 TEST METHOD UON IN GEOTECHNICAL REPORT.
10. SCARIFY AND RECOMPACT TOP 6 INCHES OF SOIL BENEATH FILL PER ITEM ABOVE.
11. PROVIDE POSITIVE SLOPES, BOTH DURING AND AFTER CONSTRUCTION, TO DIRECT SURFACE AND ROOF RUNOFF A MINIMUM OF 10'-0" FROM BUILDING FOUNDATIONS.

FORMWORK

1. PROVIDE CURING WHERE FORMS ARE REMOVED IN LESS THAN 7 DAYS.
2. REMOVE FORMS AND SHORES IN ACCORDANCE WITH THE FOLLOWING:

LOCATION	REMOVE FORMS AND SHORES NO SOONER THAN
BOTTOM FORMS AND SHORES FOR MILDLY REINFORCED LID	7 DAYS AND f'_C = 3,500 PSI MIN.
FOOTINGS AND CURBS/PADS	48 HOURS

REINFORCING STEEL

1. REINFORCING SHALL BE FABRICATED ACCORDING TO THE "MANUAL OF STANDARD PRACTICE FOR REINFORCED CONCRETE CONSTRUCTION" AND SHALL CONFORM TO THE FOLLOWING, UON:

LOCATION	TYPE
TYPICAL REINFORCING STEEL	ASTM A615, 60 KSI
WELDED STEEL REINFORCING (WWR)	ASTM A185, 70 KSI

2. PROVIDE REINFORCING SHOWN OR NOTED CONTINUOUS IN LENGTHS AS LONG AS PRACTICABLE.
3. TERMINATE REINFORCING STEEL IN STANDARD HOOKS UON OR SHOWN.
4. ALL REINFORCING STEEL INTERRUPTED BY STRUCTURAL STEEL SHALL TERMINATE WITHIN 1" OF STEEL SURFACE WITH A 90° STANDARD HOOK UON.
5. PROVIDE REINFORCING BAR DOWELS IN FOOTINGS, PILE CAPS AND OTHER SUPPORTING MEMBERS OF THE SAME SIZE AND SPACING AS VERTICAL REINFORCING UON. LAP SPLICE AS INDICATED ON TYPICAL DETAILS.
6. ANCHOR BOLTS, DOWELS AND OTHER EMBEDDED ITEMS SHALL BE SECURELY TIED IN PLACE BEFORE CONCRETE IS PLACED.
7. ACCURATELY POSITION, SUPPORT AND SECURE REINFORCEMENT FROM DISPLACING DUE TO FORMWORK, CONSTRUCTION, OR CONCRETE PLACEMENT OPERATIONS. LOCATE AND SUPPORT REINFORCING BY METAL CHAIRS, RUNNERS, BOLSTERS, SPACERS AND HANGERS AT A MAXIMUM SPACING OF 3'-0".
8. MECHANICAL COUPLERS, IF USED, SHALL BE:
   A. BARSPLICE PRODUCTS (IAPMO ER-0796).
   B. HRC (ICC ESR-2764).
   C. DAYTON SUPERIOR BAR LOCK (IAPMO ER-0319).
   D. OR APPROVED EQUAL.
9. COUPLERS FOR BEAM AND SLAB BARS AT FORMED CONSTRUCTION JOINTS MAY BE LENTON FORM SAVERS BY ERICO, ICC ER-3967.
10. WELD REINFORCING STEEL IN ACCORDANCE WITH AWS D1.4 USING E-80XX LOW HYDROGEN MOISTURE RESISTING ELECTRODES AND QUALIFIED WELDERS.
11. FIELD BENDING OF REINFORCING DOWELS ALREADY EMBEDDED IN CONCRETE OR MASONRY SHALL NOT BE ALLOWED UNLESS APPROVED BY THE SEOR.
12. MILL CERTIFICATES SHALL BE SUBMITTED FOR REVIEW.

CAST-IN-PLACE CONCRETE

1. CONCRETE IS MILDLY REINFORCED AND CAST-IN-PLACE UON. WHERE REINFORCING IS NOT SPECIFICALLY SHOWN OR WHERE DETAILS ARE NOT GIVEN, PROVIDE REINFORCING SIMILAR TO THAT SHOWN FOR SIMILAR CONDITIONS, SUBJECT TO REVIEW BY THE SEOR.
2. REFER TO ARCHITECTURAL AND MECHANICAL DRAWINGS FOR LOCATIONS OF ADDITIONAL CONCRETE CURBS AND HOUSEKEEPING PADS NOT SHOWN.
3. DIMENSIONS SHOWN FOR LOCATION OF REINFORCING ARE TO THE FACE OF BARS AND DENOTE CLEAR COVERAGE UON.
4. THE MINIMUM CONCRETE CLEAR COVER TO REINFORCING BARS IS AS FOLLOWS:

LOCATIONS	CLEAR COVER, INCHES
CONCRETE PLACED AGAINST EARTH	3
FORMED SURFACES EXPOSED TO WEATHER OR IN CONTACT WITH EARTH: #5 BARS AND SMALLER #6 BARS AND LARGER	 1½ 2
SLABS ON GRADE (TOP CLEARANCE)	1½
WALL OR SLAB SURFACES NOT EXPOSED TO WEATHER OR EARTH: #5 AND SMALLER #6 AND #7	 ¾ 1

5. CONCRETE TYPES:

USE	f'_C (PSI) (a)	MAX. SLUMP (IN)	NOMINAL MAX AGGREGATE (IN)	WATER CEMENTITIOUS RATIO
TYPICAL UON	3,000	4±1	1	0.45

a. COMPRESSIVE STRENGTH OF CONCRETE AT 28 DAYS

2. CONCRETE MIXES SHALL BE DESIGNED BY A QUALIFIED TESTING LABORATORY, BEARING A REGISTERED CIVIL ENGINEER'S STAMP TO BE REVIEWED BY THE SEOR. ONCE APPROVED, A SHOP DRAWING REVIEW STAMP WILL BE ADDED BY THE SEOR.
3. PORTLAND CEMENT SHALL BE TYPE V CONFORMING TO ASTM C150.
4. COARSE AGGREGATE SHALL CONFORM TO ASTM C33 (NORMAL WEIGHT).
5. ALL CONCRETE SHALL BE NORMAL WEIGHT (±145 PCF) HARD ROCK TYPE.
6. CONTINUOUSLY MOIST CURE CONCRETE SLABS-ON-GRADE FOR 7 DAYS MINIMUM. WATER FOG SPRAYS, PONDING, SATURATED ABSORPTIVE COVERS OR MOISTURE RETAINING COVERS MAY BE USED. IN LIEU OF MOIST CURING, CURING COMPOUNDS MAY BE SUBMITTED TO THE AOR/SEOR FOR ACCEPTANCE.
7. CONCRETE FILL THICKNESS SHOWN ON THE FRAMING PLANS ARE MINIMAL THICKNESS. NO ALLOWANCES HAVE BEEN SHOWN FOR ADDITIONAL CONCRETE FILL REQUIRED TO COMPENSATE FOR FRAME, DECK OR FORMWORK DEFLECTIONS TO MAINTAIN SURFACE TOLERANCES SPECIFIED.
8. INCLUDE ALLOWANCE FOR ADDITIONAL CONCRETE ON FLOORS DUE TO BEAM DEFLECTION. PROVIDE LEVEL FLOOR AND MINIMUM CONCRETE COVER OVER METAL DECK AS INDICATED.
9. NON-SHRINK GROUT SHALL HAVE A MINIMUM STRENGTH OF 7,000 PSI. ACCEPTABLE GROUTS INCLUDE:
   A. EUCLID CHEMICAL COMPANY: EUCO-NS
   B. L&M: CRYSTEX
   C. MASTER BUILDERS MASTERFLOW 713
   D. FIVE STAR GROUT
10. PIPES AND CONDUIT ARE TO BE PLACED IN THE MIDDLE THIRD OF SLABS AND WALLS. MAXIMUM DIAMETER SHALL BE ONE-THIRD OF SLAB OR WALL THICKNESS AND MINIMUM SPACING SHALL BE 3 DIAMETERS FROM CENTER TO CENTER.
11. ROUGHEN CONCRETE SURFACES OF CONSTRUCTION JOINTS TO ¼" AMPLITUDE AND CLEAN OF LAITANCE, FOREIGN MATTER AND LOOSE PARTICLES. LOCATE CONSTRUCTION JOINTS AS SHOWN ON THE DRAWINGS. SUBMIT ALTERNATE JOINT LOCATIONS OR JOINTS NOT SHOWN TO THE SEOR FOR REVIEW AND APPROVAL PRIOR TO PROCEEDING WITH THE WORK.
12. AT LOCATIONS WHERE CONCRETE IS CAST AGAINST EXISTING CONCRETE, ROUGHEN CONTACT SURFACES TO ¼" AMPLITUDE AND CLEAN OF LAITANCE, FOREIGN MATTER AND LOOSE PARTICLES.
13. AT LOCATIONS WHERE CONCRETE IS CAST AGAINST EXISTING MASONRY, THOROUGHLY ROUGHEN CONTACT SURFACES BY LIGHT SANDBLASTING OR OTHER SUITABLE MEANS AND CLEAN OF LAITANCE, FOREIGN MATTER AND LOOSE PARTICLES.
14. PROVIDE ¾" CHAMFERS AT ALL EXPOSED CONCRETE EDGES UON.
15. CONSOLIDATE CONCRETE PLACED IN FORMS BY MECHANICAL VIBRATING EQUIPMENT SUPPLEMENTED BY HAND-SPADING, RODDING OR TAMPING. USE EQUIPMENT & PROCEDURES FOR CONSOLIDATION OF CONCRETE IN ACCORDANCE WITH THE RECOMMENDED PRACTICES OF ACI 309 TO SUIT THE TYPE OF CONCRETE & PROJECT CONDITIONS.
16. NO WOOD SPREADERS ALLOWED. NO WOOD STAKES ALLOWED IN AREAS TO BE CONCRETED.

MASONRY

1. MASONRY (ASSEMBLY OF MASONRY UNITS, MORTAR, AND GROUT) SHALL HAVE A MINIMUM COMPRESSIVE STRENGTH OF 1,500 PSI. PROPERTIES OF INDIVIDUAL COMPONENTS SHALL BE:

COMPONENT	ASTM	COMPRESSIVE STRENGTH (PSI)	REMARKS
MASONRY UNITS	C90	1,900	GRADE N, TYPE 1, MEDIUM WEIGHT, HOLLOW, LOAD-BEARING
MORTAR	C270	1,800	TYPE S, AGGREGATES PER ASTM C144
GROUT	C476	2,000	AGGREGATES PER ASTM C404

2. COMPRESSIVE STRENGTH OF MASONRY SHALL BE DETERMINED BY THE UNIT STRENGTH METHOD DEFINED BY THE BUILDING CODE.
3. SEE "REINFORCING STEEL" NOTES FOR TYPES OF REINFORCING.
4. LAP SPLICES SHALL HAVE A LENGTH OF 65 BAR DIAMETERS. WHERE MULTIPLE BARS ARE INSTALLED IN A CELL OR COURSE, STAGGER LAPS A MINIMUM OF 2'-0".
5. CENTER VERTICAL REINFORCING IN WALL UON.
6. DOWELS FROM THE FOUNDATION SHALL MATCH THE SIZE AND SPACING OF VERTICAL REINFORCING IN MASONRY UON.
7. REINFORCE OPENINGS WITH 2- #5 HORIZONTAL AT HEAD AND 1- #5 VERTICAL AT JAMBS UON. EXTEND 24" BEYOND OPENING AT EACH SIDE.
8. VERTICAL CELLS SHALL HAVE VERTICAL ALIGNMENT THAT MAINTAINS A CLEAR UNOBSTRUCTED CONTINUOUS VERTICAL CELL. MINIMUM GROUT SPACE FOR VERTICAL CELLS SHALL BE 2½" X 3". DOWELS FROM FOOTINGS SHALL BE SET TO ALIGN WITH THE CORE CONTAINING VERTICAL WALL REINFORCEMENT.
9. VERTICAL REINFORCEMENT SHALL CONSIST OF ONE PIECE WITH NO SPLICES AND SHALL BE CENTERED IN WALL UON. PROVIDE VERTICAL SUPPORT SPACERS AT 200 BAR DIAMETERS MAXIMUM. DOWEL REINFORCEMENT TO SUPPORTING MEMBERS WITH THE SAME SIZE AND SPACING OF REINFORCEMENT INDICATED UON.
10. BED JOINT THICKNESS SHALL BE ⅜" NOMINAL AND WITHIN THE TOLERANCES OF ARTICLE 3.3 F OF TMS 602. CROSS WEBS SHALL BE FULL BEDDED IN MORTAR IN ALL COURSES OF WALLS LESS THAN 6'-0" LONG, PILASTERS, AND IN THE STARTING COURSE ON FOUNDATIONS.
11. LAY UNITS IN RUNNING BOND AND MAINTAIN VERTICAL CONTINUITY OF CORES OR CELL CAVITIES. USE OPEN END UNITS AT LOCATIONS OF VERTICAL REINFORCING. PLACE HORIZONTAL REINFORCING IN BOND BEAM UNITS.
12. FILL ALL CELLS SOLIDLY WITH GROUT UON. CLEAN CELLS AND BOND BEAMS OF MORTAR PROTRUSIONS AND DEBRIS BEFORE GROUTING. GROUT SHALL BE CONSOLIDATED BY MECHANICAL VIBRATION DURING PLACEMENT BEFORE LOSS OF PLASTICITY IN A MANNER TO FILL THE GROUT SPACE.
13. PROVIDE THE FOLLOWING MINIMUM CLEARANCES:

LOCATIONS	CLEARANCES
BETWEEN REINFORCING AND INSIDE FACE OF MASONRY UNITS	½"
BETWEEN PARALLEL BARS	1"
EMBEDDED BOLTS	1" ALL AROUND

14. LOW-LIFT GROUTING: LAY UNITS A MAXIMUM OF 4'-0" HIGH BEFORE GROUTING. PLACE GROUT CONTINUOUSLY IN LIFTS NOT EXCEEDING 4'-0". COMPLETELY GROUT THE FULL HEIGHT OF THE WALL SECTION IN ONE DAY WITH NO INTERRUPTIONS GREATER THAN ONE HOUR.
15. HIGH-LIFT GROUTING: LAY UNITS A MAXIMUM OF 12'-0" HIGH BEFORE GROUTING. PLACE GROUT CONTINUOUSLY IN LIFTS NOT EXCEEDING 6'-0". COMPLETELY GROUT THE FULL HEIGHT OF THE WALL SECTION IN ONE DAY WITH NO INTERRUPTIONS GREATER THAN ONE HOUR. PROVIDE CLEANOUTS AT EVERY CELL ALONG THE BOTTOM COURSE OF EACH GROUT LIFT. USE SIKA GROUT AID TYPE II OR E-Z MIX ADMIXTURE IN THE GROUT TO REDUCE EARLY WATER LOSS AND PRODUCE AN EXPANSIVE ACTION.
16. PROVIDE VERTICAL CONTROL JOINTS IN WALLS AT LOCATIONS SHOWN ON THE DRAWINGS.
17. PIPES, CONDUITS AND SLEEVES SHALL NOT BE USED IN WALLS LESS THAN 6'-0" LONG OR PILASTERS UNLESS SPECIFICALLY DETAILED. PIPES CONTAINING LIQUID, GAS OR VAPORS SHALL NOT BE EMBEDDED IN MASONRY. CONDUITS, PIPES AND SLEEVES SHALL NOT BE ALUMINUM AND SHALL BE COMPATIBLE WITH MASONRY. PIPES, CONDUITS AND SLEEVES SHALL BE SPACED 3 DIAMETERS ON CENTER MINIMUM.

STRUCTURAL STEEL

1. DETAIL, FABRICATE AND ERECT IN ACCORDANCE WITH AISC "SPECIFICATION FOR STRUCTURAL STEEL FOR BUILDINGS", LATEST EDITION.
2. STRUCTURAL STEEL SHALL CONFORM TO THE FOLLOWING UON:

SECTIONS	TYPE
WIDE FLANGES	ASTM A992, GR 50
CHANNELS, ANGLES & PLATES (PL)	ASTM A36
STEEL PIPE	ASTM A53, GR B
COLD FORMED HOLLOW STRUCTURAL SECTIONS (HSS)	ASTM A500, GR C
HIGH STRENGTH BOLTS (HSB)	ASTM A325N (ST UON AS PT)
MACHINE BOLTS (MB)	ASTM A307, GR A
WELDED HEADED STUDS (WHS)	ASTM A108, GR 1015 THROUGH 1020
NUTS (HEAVY HEX)	ASTM A563
HARDENED WASHERS	ASTM F436
BEVELED WASHERS	ANSI B18.23.1

3. PROVIDE NATURAL CAMBER UP, EXCEPT AT CANTILEVERS UON. AT CANTILEVERS, PROVIDE CAMBER SUCH THAT THE TIP OF THE CANTILEVER IS ABOVE THE FINAL ELEVATION.
4. SPLICE MEMBERS ONLY WHERE INDICATED.
5. BOLTED CONNECTIONS SHALL USE ⅞" DIAMETER A325 BOLTS IN BEARING TYPE CONNECTIONS UON. PROVIDE A MINIMUM OF TWO BOLTS PER CONNECTION.
6. WHERE SLOTTED HOLES ARE INDICATED, CENTER BOLTS IN SLOTS UON. HAND TIGHTEN NUT, PROVIDE SECOND NUT SNUG-TIGHTENED AGAINST FIRST, THEN SPOIL REMAINING THREADS.
7. DIAMETER OF BOLT HOLE SHALL BE 1/16" LARGER THAN THE BOLT'S DIAMETER UON. USE STANDARD AISC GAGE AND PITCH FOR BOLTS UON.
8. PROVIDE BEVELED WASHERS ON SLOPING SURFACE OF CONNECTIONS FOR FULL BEARING.
9. IF DRILLING HOLES AT STEEL MEMBERS TO ACCOMMODATE THE CONCRETE OR MASONRY ANCHORS IS REQUIRED, THE DRILLING MUST BE DONE AFTER THE ANCHORS HAVE BEEN INSTALLED. THE HOLES AT STEEL MEMBERS SHALL MATCH THE LOCATION OF INSTALLED ANCHORS.
10. PAINT ALL STRUCTURAL STEEL WITH WEATHER/RUST RESISTANT PAINT ACCORDANCE WITH THE ARCHITECTURAL DETAILS UON.
11. ALTERNATE TO PAINT: HOT DIP GALVANIZE STRUCTURAL STEEL AND FASTENERS THAT ARE PERMANENTLY EXPOSED TO THE WEATHER IN ACCORDANCE WITH ASTM A123 AND ASTM A153. REPAIR GALVANIZING AFTER WELDING IN ACCORDANCE WITH ASTM A780.
12. STRUCTURAL STEEL AND CONNECTIONS EXPOSED TO VIEW IN THE COMPLETED BUILDING ARE DESIGNATED ARCHITECTURALLY EXPOSED STRUCTURAL STEEL (AESS).
13. THE CONTRACTOR SHALL SUBMIT ALL STRUCTURAL STEEL AND MISCELLANEOUS STEEL SHOP DRAWINGS TO THE SEOR FOR APPROVAL PRIOR TO FABRICATION.
14. NON-SHRINK GROUT SHALL BE PLACED BELOW BASE PLATES PRIOR TO ADDING VERTICAL LOAD.
15. ALL STRUCTURAL STEEL SHALL BE ERECTED PLUMB AND TRUE TO LINE. TEMPORARY BRACING SHALL BE INSTALLED AND SHALL BE LEFT IN PLACE UNTIL OTHER MEANS ARE PROVIDED TO ADEQUATELY BRACE THE STRUCTURE.
16. TOP OF STEEL (TOS) ELEVATIONS INDICATED ON THE DRAWINGS ARE GIVEN AS AN AID TO THE CONTRACTOR. THE CONTRACTOR MUST VERIFY THE DIMENSIONS PRIOR TO THE AOR AND SEOR REVIEW OF THE STRUCTURAL STEEL SHOP DRAWINGS. THE SEOR ASSUMES NO RESPONSIBILITY FOR TOP OF STEEL ELEVATIONS.
17. STRUCTURAL STEEL BELOW GRADE SHALL HAVE 3" MINIMUM OF CONCRETE COVER.
18. SPECIAL INSPECTION IS REQUIRED FOR SHOP FABRICATION WHEN IT INVOLVES WELDING, THERMAL CUTTING OR HEATING UNLESS THE FABRICATOR IS APPROVED IN ACCORDANCE WITH CBC SECTION 1704.2.5.1. SEE "STRUCTURAL TESTS & SPECIAL INSPECTIONS" SECTION OF GENERAL NOTES FOR ADDITIONAL REQUIREMENTS.
19. MANUFACTURER'S CERTIFIED MILL TEST REPORTS SHALL BE SUBMITTED FOR REVIEW.

STRUCTURAL STEEL WELDING

1. WELDERS SHALL BE CERTIFIED BY THE AWS AND THE GOVERNING JURISDICTION.
2. USE THE MINIMUM SIZE OF WELDING IN ACCORDANCE WITH AISC MANUAL OF STEEL CONSTRUCTION AT STEEL TO STEEL JOINTS UNLESS A LARGER WELDING SIZE IS SPECIFIED ON THE PLANS.
3. WHERE LENGTH OF WELDING IS NOT SHOWN, IT SHALL BE FULL LENGTH OF JOINT. ALL BUTT WELDS SHALL BE COMPLETE PENETRATION WELDS UON.
4. WHERE FIELD WELDING IS NOTED, THE DESIGNATION IS GIVEN AS A SUGGESTED CONSTRUCTION PROCEDURE ONLY.
5. ARC-WELDING ELECTRODES/ FILLER METALS SHALL BE LOW HYDROGEN TYPES E7XTX, E7XTXX OR E70XXX MINIMUM AS APPLICABLE. ELECTRODES WITH CHARPY V-NOTCH (CVN) TEST VALUES OF A MINIMUM OF 20 FT-LB AT -20 DEG F ARE TO BE USED AT THE FOLLOWING LOCATIONS:
   A. CANOPY COLUMNS TO EMBED PLATES.
6. FACES OF FILLET WELDS NOT EXPOSED TO VIEW SHALL HAVE AS-WELDED SURFACES THAT ARE REASONABLY SMOOTH AND UNIFORM. NO FINISHING OR GRINDING SHALL BE REQUIRED EXCEPT WHERE CLEARANCES OR FIT OF OTHER ITEMS MAY SO NECESSITATE.
7. ALL COMPLETE AND PARTIAL PENETRATION WELDS WHICH ARE EXPOSED TO VIEW SHALL BE GROUND SMOOTH AND FLUSH WITH FINISH SURFACE OF STEEL. HOLES SHALL BE FILLED WITH WELD METAL AND SMOOTHED BY GRINDING OR FILING.
8. CLEAN GROOVE PREPARATION THERMAL CUTS BY GRINDING.
9. WELDS SHALL BE TERMINATED AT THE END OF A JOINT IN A MANNER THAT WILL ENSURE SOUND WELDS.
10. TO ASSURE THE PROPER AMPERAGE AND VOLTAGE OF THE WELDING PROCESS, A HANDHELD CALIBRATED AMP AND VOLT METER SHALL BE USED. AMPERAGE AND VOLTAGE SHALL BE MEASURED AT THE ARC WITH THIS EQUIPMENT. TRAVEL SPEED AND ELECTRODE STICK OUT SHALL BE VERIFIED TO BE IN COMPLIANCE WITH THE ELECTRODE MANUFACTURER'S RECOMMENDATIONS AND WITH THE APPROVED WELDING PROCEDURE SPECIFICATION.
11. CONTINUOUS SPECIAL INSPECTION IS REQUIRED FOR FIELD WELDING.

WELDING INSPECTION AND TESTING

1. IN ADDITION TO VISUAL INSPECTION AND REVIEW OF CONTRACTOR'S FABRICATION AND ERECTION REPORTS, THE OWNER'S STEEL TESTING AGENCY SHALL PERFORM THE INDICATED INSPECTION AND TESTING. THE STEEL TESTING AGENCY SHALL BE CERTIFIED BY THE BUILDING AUTHORITY AND SHALL PROVIDE REGISTERED INSPECTORS FOR CONTINUOUS INSPECTION OF ALL STEEL FABRICATION AND ERECTION, STRUCTURAL WELDING AND TESTING OF MATERIALS.
2. BASE METAL THICKER THAN 1½", SUBJECTED TO THROUGH THICKNESS WELD SHRINKAGE, SHALL BE ULTRASONICALLY TESTED 48 HOURS OR MORE AFTER COMPLETION OF WELDING.
3. ALL WELDS SHALL BE VISUALLY INSPECTED AND PERIODICALLY MEASURED.
4. AMPERAGE, VOLTAGE, POLARITY, AND ELECTRODE STICK OUT SHALL BE VERIFIED TO BE IN COMPLIANCE WITH THE ELECTRODE MANUFACTURER'S RECOMMENDATIONS.
5. ALL SHOP WELDING SHALL BE PERFORMED IN AN APPROVED FABRICATOR'S SHOP IN ACCORDANCE WITH CBC SECTION 1704.2.5.1. IF THIS CRITERIA IS NOT MET, THEN SPECIAL INSPECTION IS REQUIRED.

WELDING SUBMITTALS

1. PROVISION FOR WELDING HEAT EFFECTS: A SEQUENCE OF FIELD WELDING SHALL BE PLANNED TO MINIMIZE RESIDUAL STRESSES AND DISTORTION AND SHALL BE SUBMITTED TO THE SEOR AT TIME OF SHOP DRAWING SUBMITTAL. ANY PROPOSED DEVIATIONS FROM THE DETAILS SHOWN ON THE DRAWINGS SHALL BE APPROVED BY THE SEOR. THE PROCEDURES AND THE DETAILS USED SHALL RESULT IN COMPLETED CONNECTIONS, WHICH ARE IN FULL COMPLIANCE WITH THE INTENT OF THE DETAILS SHOWN ON THE DRAWINGS. THE SEQUENCE OF FIELD WELDING, BOTH IN THE JOINTS AND FRAMES AS A WHOLE, SHALL BE SUBMITTED TO THE SEOR FOR APPROVAL. NO FIELD WELDING SHALL BE PERFORMED PRIOR TO APPROVAL.
2. A WRITTEN WELDING PROCEDURE SPECIFICATION PER AWS SHALL BE DEVELOPED BY THE CONTRACTOR AND REVIEWED/STAMPED BY A CERTIFIED WELDING INSPECTOR (CWI), THEN
3. SUBMITTED TO THE SEOR FOR APPROVAL.
4. OUR SHOP DRAWING STAMP WILL BE ADDED TO THE WPS UPON OUR APPROVAL.
5. ALL WELDED JOINTS SHALL BE PREQUALIFIED PER AWS. NON-PREQUALIFIED WELDED JOINTS SHALL BE QUALIFIED BY TEST AND PROCEDURE QUALIFICATION TEST RECORD PER AWS.
6. THE WELDING PROCEDURE SPECIFICATION SHALL INCLUDE THE WELDING PARAMETERS RECOMMENDED BY THE ELECTRODE MANUFACTURER AND SHALL INCLUDE THE FOLLOWING:
   A. THE NECESSARY INFORMATION REQUIRED BY THE CODE AND ANY OTHER INFORMATION NECESSARY TO PRODUCE WELDS.
   B. THE APPLICABLE BASE METAL TYPES AND THICKNESS.
   C. THE WELDING JOINT DETAILS INCLUDING JOINT TYPE, WELD TYPE, JOINT GEOMETRY AND APPLICABLE DIMENSIONS.
   D. THE WELD PASSES IN SKETCH INCLUDING LAYER THICKNESS (¼" MAXIMUM) AND BEAD WIDTH (⅝" MAXIMUM).
   E. THE SEQUENCE OF DEPOSITION.
   F. THE APPLICABLE WELDING PROCESS.
   G. THE POSITION OF WELDING.
   H. THE FILLER METAL, ELECTRODE SPECIFICATION, CLASSIFICATION AND DETAILS REGARDING SHIELDING MATERIAL.
   I. THE MINIMUM PRE-HEAT REQUIREMENTS, INTERPASS TEMPERATURES AND POST WELD HEAT TREATMENT.
   J. THE APPLICABLE ELECTRICAL CHARACTERISTICS FOR THE PROCESS.
   K. THE SPECIFIC VALUES REQUIRED FOR EACH WELDING PASS.
   L. THE ELECTRODE TYPE AND DIAMETER. ALL ELECTRODES SHALL BE LOW HYDROGEN TYPES.
   M. THE TYPE OF CURRENT AND ACCEPTABLE RANGES OF CURRENT MEASURED IN AMPERAGE.
   N. THE MANUFACTURERS' RECOMMENDED MELT-OFF RATE, DEPOSITION RATE AND WIRE FEED SPEED FOR WIRE FEED PROCESSES.
   O. THE VOLTAGE.
   P. THE ACTUAL FIELD TRAVEL SPEED AND MANUFACTURER'S DATA FOR TRAVEL SPEED.
   Q. THE ELECTRODE EXTENSION FOR WIRE FEED PROCESSES.
   R. THE AMPERAGE, VOLTAGE, ELECTRODE EXTENSION AND ACCEPTABLE RANGES OF MANUFACTURER'S RECOMMENDATIONS.
   S. THE ELECTRODE MANUFACTURER'S TECHNICAL INFORMATION.

STRUT FRAMING & COMPONENTS

1. ALL MISCELLANEOUS STRUTS AND COMPONENTS SHALL BE UNISTRUT OR APPROVED EQUAL (WITH SEOR APPROVAL).
2. STRUT FRAMING SHALL BE 12 GAUGE, EITHER ASTM A1011 SS GR 33, OR ASTM A653 GR 33. HEX HEAD CAP SCREW (HHCS) CONNECTORS SHALL MEET OR EXCEED ASTM A307 CRITERIA. FITTINGS SHALL CONFORM TO ASTM A575, A576, A653 OR A36 AND MEET THE PHYSICAL REQUIREMENTS OF ASTM A1011 SS GR 33.
3. ALL STRUT EXPOSED TO WEATHER SHALL BE PG OR HDG. ALL FASTENERS EXPOSED TO WEATHER SHALL BE HDG OR STAINLESS STEEL.
4. SEE PLANS FOR SIZES AND TYPES OF STRUT USED.
5. TYPICAL SCREWS SHALL BE ½"Φ HEX HEAD CAP SCREWS (HHCS) UON.
6. TYPICAL SPRING NUT SHALL BE P1010 FOR ½"Φ HHCS (OR TO MATCH SCREW WHEN OTHER SIZE IS SPECIFIED).
7. THREADED ROD SHALL BE ½"Φ HTHR, A307 OR A36 ALL-THREADED ROD.
8. PROVIDE THE FOLLOWING STRUT TYPES (UON ON DRAWINGS):
   A. SOLID STRUT: TYPICAL (UON, REQUIRED FOR SCREWED CONNECTIONS).
   B. 'HS' (HOLES): BOLTED CONNECTIONS (NO ADDITIONAL DRILLING ALLOWED).
   C. 'T' (SLOTS): ROD STIFFENERS (REQUIRED), GRAVITY TRAPEZE (NO ADDITIONAL DRILLING ALLOWED).
9. DRILL STANDARD HOLE (FASTENER DIAMETER + $\frac{1}{16}$") FOR ALL CONNECTIONS THROUGH SOLID FACE OF STRUT.
10. INSTALLATION TORQUE OF ALL HHCS SHALL BE 6 FT-LBS (¼"Φ), 19 FT-LBS (⅜"Φ) AND 50 FT-LBS (½"Φ).

STEEL DECK

1. STEEL ROOF DECK SHALL HAVE MINIMUM SECTION PROPERTIES AS SHOWN ON THE "TYPICAL DETAILS".
2. ALL ROOF DECK SHALL CONFORM TO ASTM A653 – SS GRADE 33 (MINIMUM) WITH MINIMUM YIELD STRENGTH OF 38 KSI AND SHALL BE GALVANIZED IN ACCORDANCE WITH ASTM A653, G60. REPAIR DAMAGED COATING.
3. PROVIDED VENTED DECK WHEN CONCRETE WILL BE PLACED ON TOP.
4. WHERE POSSIBLE, LAY OUT METAL DECK TO SPAN AT LEAST THREE SPANS CONTINUOUSLY (DECK SHALL SPAN AT LEAST TWO SPANS MINIMUM UON). TERMINATE ENDS OVER SUPPORTS EXCEPT AT OPENINGS OR BUILDING EDGES WHERE METAL DECKS MAY BE CANTILEVERED AS SHOWN ON THE DRAWINGS.
5. PROVIDE 2" END LAPS AND A MINIMUM OF 2" END BEARING ON SUPPORTING MEMBERS UON.
6. SECURE ROOF STEEL DECK TO THE STEEL FRAMEWORK AND TOGETHER AS SHOWN ON THE "TYPICAL DETAILS" UON ON THE STRUCTURAL DRAWINGS.
7. PUDDLE WELDS TO SECURE STEEL DECK TO SUPPORTING MEMBERS SHALL BE ½" EFFECTIVE DIAMETER FUSION WELDS UON.
8. ALL WELDING SHALL CONFORM TO AWS AND SHALL BE PERFORMED BY CERTIFIED WELDERS USING E-60XX ELECTRODES.
9. ALL WELDS OF STEEL DECK SHALL BE TOUCHED UP WITH A ZINC-RICH PAINT.
10. CLOSURE PLATES AND CONTINUOUS BENT PLATES SUPPORTING METAL DECK EDGE SHALL BE LIGHT GAGE COLD FORMED WITH MINIMUM YIELD POINT F_Y = 33,000 PSI.

CITY OF SANTA CLARITA
BUILDING & SAFETY
APPROVED
Under SCMC Titles 18, 19, 20, 21, 24, 25
Sep 16, 2025
F. Svendsen
BLD25-00576 (ARCH)
The approved plans must be available at the construction site at all times. Changes or alterations to approved plans shall not be made without written permission from the City of Santa Clarita Building & Safety Division. The approval of these plans shall not be construed to permit or approve any violation of the applicable codes, ordinances, or other laws.

DRAWING INDEX

S0.1	GENERAL NOTES
S0.2	GENERAL NOTES
S0.3	TYPICAL DETAILS
S0.4	TYPICAL DETAILS
S0.5	TYPICAL DETAILS
S1.1	FOUNDATION PLAN
S1.2	ROOF FRAMING PLAN
S2.1	DETAILS
S2.2	DETAILS

REVIEWED BY: katie kupshul — PM - DESIGN — 09/30/2025 EXECUTION DATE
REVIEWED BY: [signature] — PM - CONSTRUCTION — 09/30/2025 EXECUTION DATE

IN ACCORDANCE WITH RESOLUTION No. 19-6, AS A RESOLUTION OF THE CITY COUNCIL OF THE CITY OF SANTA CLARITA DELEGATING DISCRETIONARY AUTHORITY TO THE DIRECTOR OF PUBLIC WORKS, DIRECTOR OF RECREATION AND COMMUNITY SERVICES, DIRECTOR OF NEIGHBORHOOD SERVICES, CITY ENGINEER, AND ASSISTANT CITY ENGINEERS TO APPROVE PLANS AND DESIGNS FOR THE CONSTRUCTION OF OR IMPROVEMENTS TO PUBLIC PROPERTY FOR PURPOSES OF DESIGN IMMUNITY PURSUANT TO GOVERNMENT CODE SECTION 830.6 FOR THE CITY OF SANTA CLARITA, I DO HEREBY EXERCISE THE DISCRETION DELEGATED TO ME AND APPROVE THE PLAN OR DESIGN, OR AMENDMENT OR MODIFICATION TO THE PLAN OR DESIGN, OR A CONSTRUCTION OF, OR AN IMPROVEMENT TO THE PUBLIC FACILITY, STRUCTURE, OR PROPERTY TO WHICH THIS STATEMENT, MY SIGNATURE AND DATE IS AFFIXED.

REGISTERED PROFESSIONAL ENGINEER — ALEXANDROS G. BLETSOS — No. 5659 — STRUCTURAL — STATE OF CALIFORNIA
Alexandros Bletsos
SIGNED 04.30.2025

SPIRE STRUCTURAL ENGINEERING
26461 Rancho Parkway South Lake Forest, CA 92630 tel: 949.916.3440
www.spirestructures.com
JOB#: 24PAC01 ENG: AGB

PREPARED BY ALEXANDROS BLETSOS PROJECT ENGINEER
R.S.E. NO. S5659 EXP. 09/30/2025
DRAWN BTM | SCALE AS SHOWN
DESIGNED AGB
CHECKED AGB | DATE 02/17/2020

TITLE DETAILS

C258
NEWHALL PARK POOL
PUMP ROOM RENOVATION PLANS
SANTA CLARITA CA

SHEET S0.1
21 OF 61 SHEETS
JOB NO. C258

Docusign Envelope ID: F28B5F90-223C-42A7-9ED1-46869B54D361
Xrefs: C258 Titleblock.dwg
Dimscale = 1; LTscale = 1; PSltscale = 1; ACAD Ver. = 23.0s (LMS Tech); Visretain = 1
R:\C258\Engineering\C258-04 (100% CD)\sheets\C258-04 S0.1 GENERAL NOTES.dwg - Tab: 21 - by jpenderghast on 09/29/25 at 2:23:50 PM

Sep. 29, 2025

LUMBER

1. WOOD DIMENSION LUMBER SHALL BE VISUALLY GRADED DOUGLAS FIR-LARCH PER WCLIB AND SHALL BE SURFACED DRY (19% MOISTURE CONTENT MAXIMUM). STRUCTURAL FRAMING MEMBERS SHALL BE S4S AND GRADE MARKED AS FOLLOWS UON:
   A. TYPICAL UON: No. 2
   B. 6x AND LARGER BEAMS: No. 1
2. SHEATHING SHALL BE APA RATED, MANUFACTURED WITH EXTERIOR GLUE AND 32/16 MINIMUM SPAN RATING (SEE DRAWINGS FOR GRADE) AND SHALL CONFORM TO:
   A. 5-PLY PLYWOOD MANUFACTURED TO VOLUNTARY PRODUCT STANDARD PS 1-19.
   B. WOOD-BASED STRUCTURAL-USE PANELS CONFORMING TO VOLUNTARY PRODUCT STANDARD PS 2-18.
3. USE ASTM A307 MACHINE BOLTS UON. PROVIDE MALLEABLE IRON OR STEEL PLATE WASHERS UNDER NUTS AND BOLT HEADS AND LAG SCREWS BEARING ON WOOD PER THE FOLLOWING TABLE:

BOLT OR SCREW DIAMETER	SQUARE PLATE WASHER SIZE	ROUND PLATE WASHER SIZE	MALLEABLE IRON WASHER SIZE
½"	2"x2"x¼"	2¼"Φ x 3/16"	2¼"Φ x ¼"
5/8"	2½"x2½"x¼"	2½"Φ x ¼"	2¾"Φ x 5/16"
¾"	2¾"x2¾"x¼"	3"Φ x ¼"	3"Φ x 7/16"

4. CUT WASHERS SHALL NOT BE USED WITHOUT PRIOR WRITTEN CONSENT FROM THE SEOR.
5. PROVIDE HOT-DIPPED, ZINC-COATED GALVANIZED OR STAINLESS STEEL FASTENERS (NAILS, BOLTS, WASHERS, NUTS, ETC.) AT ALL PRESSURE-PRESERVATIVE TREATED (PT) & FIRE-RETARDANT TREATED (FRT) MEMBERS.
6. MINIMUM NAILING SHALL COMPLY WITH CBC TABLE 2304.10.2. NAILS SHALL BE COMMON WIRE NAILS (OR AS SPECIFIED FOR ACCESSORIES OF HARDWARE CONNECTORS) WITH PROPERTIES PER THE FOLLOWING TABLE:

NAIL SIZE	DIAMETER x LENGTH
8d	0.131" x 2½"
10d	0.148" x 3"
16d	0.162" x 3½"

7. SHEATHING NAILING SHALL HAVE A MINIMUM EDGE DISTANCE OF 3/8". NAIL HEADS SHALL BE FLUSH WITH TOP SURFACE OF SHEATHING; SINKING NAIL HEADS IS PROHIBITED.
8. PROVIDE SHEATHING EDGE NAILING AROUND OPENINGS.
9. NAILING SHALL BE ACCOMPLISHED WITHOUT SPLITTING WOOD. CONTACT THE SEOR FOR ALTERNATE METHOD IF SPLITTING OCCURS.
10. HARDWARE CONNECTORS AND ACCESSORIES SHALL BE SIMPSON STRONG-TIE CONNECTORS OR APPROVED EQUAL.
11. SILL PLATES IN DIRECT CONTACT WITH CONCRETE, MASONRY, OR EARTH, SHALL BE TREATED WOOD OR APPROVED EQUAL. TREATED WOOD SHALL BE TREATED WITH ALKALINE COPPER QUAT (ACQ-C AND ACQ-D), CARBONATE AZOLE (CBA-A), OR COPPER AZOLE (CA-B).
12. SOLID BLOCKING SHALL BE PLACED BETWEEN JOISTS AT POINTS OF SUPPORT AND POINTS WHERE SHEATHING IS DISCONTINUOUS.
13. WOOD MEMBER WITH WANE SHALL NOT BE LOCATED AT SHEATHING JOINT.
14. NO STRUCTURAL MEMBER SHALL BE CUT WITHOUT THE APPROVAL OF THE SEOR.
15. HARDWARE CONNECTING WOOD MEMBERS SHALL BE RECESSED WHEN REQUIRED BY ARCHITECTURAL FINISH. VERIFY WITH ARCHITECTURAL DRAWINGS TYPICAL.
16. PROVIDE HOT-DIPPED, ZINC-COATED GALVANIZED WASHERS FOR ALL SILL PLATE ANCHOR BOLTS. EITHER 3/16"x2"x2" PLATE WASHERS OR SIMPSON BP WASHERS ARE ACCEPTABLE.
17. AT BOLTS (INCLUDING AT HOLDOWNS), NUTS SHALL BE TIGHTENED TO FINGER TIGHT PLUS ONE-HALF TURN JUST PRIOR TO COVERING THE WALL FRAMING.
18. BOLT HOLES AT WOOD MEMBERS SHALL NOT BE MORE THAN 1/16" LARGER THAN THE BOLT DIAMETER.
19. SIMPSON HARDWARE AND FASTENERS IN CONTACT WITH TREATED WOOD SILL PLATES SHALL BE ZMAX COATED. ALL NAILS INTO TREATED MEMBERS AND SILL PLATES SHALL BE HOT-DIPPED GALVANIZED OR SIMPSON ZMAX COATED NAILS.
20. SOLID BLOCKING OR EQUIVALENT CROSS-BRIDGING SHALL BE INSTALLED BETWEEN ALL ROOF JOISTS AT THE SPACING PER CODE.

EXPANSION (WEDGE) ANCHORS

1. WHEN INSTALLING DRILLED-IN ANCHORS IN NON-PRESTRESSED CONCRETE, USE CARE AND CAUTION TO AVOID CUTTING OR DAMAGING THE EXISTING REINFORCING.
2. EXPANSION ANCHORS INTO CONCRETE SHALL BE HILTI KB-TZ2 (ICC ESR-4266).
3. EXPANSION ANCHORS INTO MASONRY SHALL BE HILTI KB-TZ2 (ICC ESR-4561).
4. INSTALL ANCHORS IN ACCORDANCE WITH THE ICC REPORT.
5. EFFECTIVE EMBEDMENTS (h_{ef}) ARE SHOWN ON DETAILS.
6. PROVIDE STAINLESS STEEL (SS) FASTENERS FOR EXTERIOR USE OR WHEN EXPOSED TO WEATHER. PROVIDE CARBON STEEL (CS) ANCHORS AT INTERIOR LOCATIONS UON.
7. IF REINFORCEMENT IS ENCOUNTERED DURING DRILLING, ABANDON HOLE AND SHIFT LOCATION TO AVOID THE REINFORCEMENT. IF THE ANCHOR MAY NOT BE SHIFTED AS NOTED BELOW, CONTACT THE SEOR.
8. WHEN SHIFTING/RELOCATING AN ANCHOR, PROVIDE A MINIMUM OF TWO ANCHOR DIAMETERS OR 1", WHICHEVER IS LARGER, OF SOUND CONCRETE BETWEEN THE ANCHOR AND THE ABANDONED HOLE.
9. FILL ABANDONED ANCHOR HOLES WITH NON-SHRINK GROUT.
10. LOCATE REINFORCEMENT AND CONFIRM FINAL ANCHOR LOCATIONS PRIOR TO FABRICATING PLATES, MEMBERS OR OTHER STEEL ASSEMBLIES ATTACHED WITH ANCHORS.
11. INSTALL ANCHORS TO THE FOLLOWING SPECIFICATIONS:

ANCHORS IN CONCRETE:

ANCHOR DIAMETER (IN)	¼		⅜		½		⅝		⅝		⅝		¾	
EFFECTIVE EMBED, h_{ef} (IN)	1½		2½		2½		2¾		3¼		4		3¾	
NOMINAL EMBED, h_{nom} (IN)	1¾		3		3		3¼		3¾		4½		4½	
MIN HOLE DEPTH, h_o (IN)	2		3¼		3⅜		3⅜		4¼		4¾		4¾	
INSTALL TORQUE (LB-FT)(1)	4	6	30		50	40	40	60	40	60	40	60	110	125
MIN THICKNESS, h_{min} (IN)	3¼		5		5		5		5½		6		6	
MIN EDGE DIST, c_{min} (IN)(1)	1½		2½		2¾	2½	4½	4	3½	3¼	2¾	2¼	4	
FOR s ≥ (IN)(1)	1½		5		9¾	4½	6½	7	5½		7¼	7	5¾	7½
MIN SPACING, s_{min} (IN)(1)	1½		2	2¼	3	2½	4½	5½	2¾		2¼	3	3¾	4
FOR c ≥ (IN)(1)	1½		4	3½	8	5	5½		7	4	4¼		7½	6

NOTES:
1. TWO VALUES SHOWN WHEN DIFFERENT FOR CS & SS RESPECTIVELY PER TABLE 3 OF THE ICC REPORT.

ANCHORS IN MASONRY:

ANCHOR DIAMETER, IN	¼		⅜	½	⅝		¾
EFFECTIVE EMBED, h_{ef} (IN)	1½		2½	3¼	4		4¾
NOMINAL EMBED, h_{nom} (IN)	1¾		3	3¾	4½		5½
MIN HOLE DEPTH, h_o (IN)	2		3¼	4¼	4¾		5¾
INSTALL TORQUE (LB-FT)(1)	4	6	15	25	30	35	50
MIN SPACING, s_{min} (IN)	3		3	4	5		6

NOTES:
1. TWO VALUES SHOWN WHEN DIFFERENT FOR CS & SS RESPECTIVELY.

12. MAINTAIN A MINIMUM EDGE DISTANCE PER TABLE ABOVE AND MINIMUM ANCHOR SPACING OF 3 TIMES THE ANCHOR EMBEDMENT UON. CONTACT SEOR IF THIS CANNOT BE ACCOMPLISHED.
13. SPECIAL INSPECTIONS OF POST-INSTALLED ANCHOR INSTALLATIONS (PER CBC 1705.3) MUST BE PERFORMED BY AN APPROPRIATELY QUALIFIED SPECIAL INSPECTOR EMPLOYED BY AN APPROVED AGENCY RETAINED BY THE OWNER.

ADHESIVE DOWELS

1. WHEN INSTALLING DRILLED-IN DOWELS IN EXISTING NON-PRESTRESSED REINFORCED CONCRETE, USE CARE AND CAUTION TO AVOID CUTTING OR DAMAGING THE EXISTING REINFORCING BARS.
2. DOWELS INTO CONCRETE SHALL BE INSTALLED WITH ONE OF THE FOLLOWING MATERIALS UON:
   A. HILTI HIT-HY 200 V3 (ICC ESR-4868)
   B. HILTI HIT-RE 500 V3 (ICC ESR-3814)
   C. SIMPSON SET-3G (ICC ESR-4057)
3. DOWELS INTO MASONRY SHALL BE INSTALLED WITH ONE OF THE FOLLOWING MATERIALS UON:
   A. HILTI HY-270 (ICC ESR-4143)
   B. SIMPSON SET (ICC ESR-1772)
   C. SIMPSON SET-3G (ICC ESR-4844)
4. ADHESIVE DOWELS SHALL BE INSTALLED IN ACCORDANCE WITH THE ICC REPORT & THE MANUFACTURER'S PRINTED INSTALLATION INSTRUCTIONS (MPII) INCLUDED WITH THE ADHESIVE PRODUCT. REQUIREMENTS FOR MOISTURE CONDITION AND TEMPERATURE OF CONCRETE AT TIME OF INSTALLATION AND REQUIREMENTS FOR HOLE DRILLING (HOLE DIAMETER, DEPTH AND CLEANING/PREPARATION) ARE NOTED IN THE ICC REPORT AND MPII DOCUMENT.
5. ADHESIVE DOWELS SHALL NOT BE INSTALLED IN NEW CONCRETE UNTIL 21 DAYS MINIMUM.
6. DOWELS SHALL CONFORM TO ASTM A615 GRADE 60 REINFORCING STEEL.
7. REMOVE GREASE, OIL, RUST AND OTHER LAITANCE FROM DOWELS PRIOR TO INSTALLATION.
8. IF REINFORCEMENT IS ENCOUNTERED DURING DRILLING, ABANDON HOLE AND SHIFT THE DOWEL LOCATION TO AVOID REINFORCEMENT. IF THE DOWEL MAY NOT BE SHIFTED AS NOTED BELOW, CONTACT THE SEOR.
9. WHEN SHIFTING/RELOCATING DOWELS, PROVIDE A MINIMUM OF TWO DOWEL DIAMETERS OR 1", WHICHEVER IS LARGER, OF SOUND CONCRETE BETWEEN THE DOWEL AND THE ABANDONED HOLE.FILL ABANDONED HOLES FOR DOWELS WITH NON-SHRINK GROUT OR ADHESIVE.
10. EMBEDMENT DEPTH FOR DOWELS ARE SHOWN IN THE DRAWINGS.

POWER ACTUATED FASTENERS (PAF)

1. WHEN INSTALLING PAF IN EXISTING NON-PRESTRESSED REINFORCED CONCRETE, USE CARE AND CAUTION TO AVOID CUTTING OR DAMAGING THE EXISTING REINFORCING BARS.
2. PAF SHALL BE HILTI X-U (0.157" DIAMETER) WITH WASHER PER ICC ESR-2269 WITH 1" EMBEDMENT INTO CONCRETE (SEE ICC REPORT FOR REQUIREMENTS INTO STEEL FRAMING) UON.
3. MAINTAIN 3" MINIMUM EDGE DISTANCE AND 4" MINIMUM SPACING IN CONCRETE. MAINTAIN ½" MINIMUM EDGE DISTANCE AND 1" MINIMUM SPACING IN STEEL. CONTACT SEOR IF THIS CANNOT BE ACCOMPLISHED.
4. PAF IN CONCRETE SHALL NOT BE USED TO RESIST SUSTAINED TENSION LOADS OR FOR BRACE APPLICATIONS (SEISMIC TENSION) EXCEPT SUSPENDED CEILING APPLICATIONS AND DISTRIBUTED SYSTEMS WITH SERVICE LOAD LIMITED TO 90 LBS (PER ASCE7 13.4.5, EXCEPTION 1).

STRUCTURAL TESTS AND SPECIAL INSPECTIONS

1. STRUCTURAL TESTS AND INSPECTIONS SHALL BE ACCORDING TO 2022 CALIFORNIA BUILDING CODE.
2. THE SPECIAL INSPECTIONS IDENTIFIED ARE IN ADDITION TO THOSE REQUIRED BY SECTION 110 OF THE CODE, AS AMENDED. SPECIAL INSPECTION IS NOT A SUBSTITUTE FOR INSPECTION BY THE GOVERNING JURISDICTION.
3. AN INDEPENDENT TESTING AGENCY AND SPECIAL INSPECTORS WILL BE RETAINED BY THE OWNER (NOT THE CONTRACTOR OR ANY OTHER PERSON RESPONSIBLE FOR THE WORK) TO PERFORM TESTS AND SPECIAL INSPECTIONS. THE CONTRACTOR SHALL PROVIDE ACCESS AND FURNISH SAMPLES TO THE AGENCY AS REQUIRED.
4. IF INITIAL TESTS OR INSPECTIONS MADE BY THE OWNER'S TESTING AGENCY REVEAL THAT ANY PORTION OF THE WORK DOES NOT COMPLY WITH THE CONTRACT DOCUMENTS, ADDITIONAL TESTS, INSPECTIONS AND NECESSARY REPAIRS WILL BE MADE AT THE CONTRACTOR'S EXPENSE.
5. A CERTIFICATE OF SATISFACTORY COMPLETION OF WORK REQUIRING SPECIAL INSPECTION MUST BE COMPLETED AND SUBMITTED TO THE GOVERNING JURISDICTION AND SEOR.
6. PERIODIC OR CONTINUOUS PRESENCE AND INSPECTION BY THE PROJECT OR SPECIAL INSPECTOR ARE REQUIRED FOR THE FOLLOWING TYPES OF WORK WHERE OCCURS:

REQUIRED VERIFICATION AND INSPECTION OF STEEL CONSTRUCTION (AISC 360)

TYPE	INSPECTION FREQUENCY	REFERENCED STANDARD	IBC REFERENCE
1. STRUCTURAL STEEL a. VERIFICATION OF IDENTIFICATION MARKINGS TO CONFORM TO ASTM STANDARDS SPECIFIED IN THE APPROVED CONSTRUCTION DOCUMENTS. b. VERIFICATION OF MANUFACTURER'S CERTIFIED MILL TEST REPORTS.	PERIODIC PERIODIC	---	---
2. WELDING (AISC TABLES N5.4-1, N5.4-2 & N5.4-3)	PER AISC	---	---
3. HIGH STRENGTH BOLTS (AISC TABLES N5.6-1, N5.6-2 & N5.6-3)	PER AISC	---	---

REQUIRED SPECIAL INSPECTIONS AND TESTS OF CONCRETE CONSTRUCTION (CBC TABLE 1705.3)

TYPE	INSPECTION FREQUENCY	REFERENCED STANDARD	IBC REFERENCE
1. INSPECT REINFORCEMENT AND VERIFY PLACEMENT.	PERIODIC	ACI 318 CH 20, 25.2, 25.3, 26.6.1-26.6.3	1908.4
3. INSPECT ANCHORS CAST IN CONCRETE	PERIODIC	ACI 318: 17.8.2	---
4. INSPECT ANCHORS/DOWELS POST-INSTALLED IN HARDENED CONCRETE MEMBERS (NO SUSTAINED TENSION ON ADHESIVE)	PERIODIC	ACI 318: 17.8.2	---
5. VERIFY USE OF REQUIRED DESIGN MIX.	PERIODIC	ACI 318: CH. 19, 26.4.3, 26.4.4	1904.1, 1904.2, 1908.2, 1908.3
6. PRIOR TO CONCRETE PLACEMENT, FABRICATE SPECIMENS FOR STRENGTH TESTS, PERFORM SLUMP AND AIR CONTENT TESTS, AND DETERMINE THE TEMPERATURE OF THE CONCRETE.	CONTINUOUS	ASTM C172 ASTM C31 ACI 318: 26.5, 26.12	1908.10
7. INSPECT CONCRETE PLACEMENT FOR PROPER APPLICATION TECHNIQUES.	CONTINUOUS	ACI 318: 26.5	1908.6, 1908.7, 1908.8
8. VERIFY MAINTENANCE OF SPECIFIED CURING TEMPERATURE AND TECHNIQUES.	PERIODIC	ACI 318: 26.5.3-26.5.5	1908.9
11. VERIFY IN-SITU CONCRETE STRENGTH PRIOR TO REMOVAL OF SHORES AND FORMS FROM STRUCTURAL SLABS.	PERIODIC	ACI 318: 26.11.2	---
12. INSPECT FORMWORK FOR SHAPE, LOCATION AND DIMENSIONS OF THE CONCRETE MEMBER BEING FORMED.	PERIODIC	ACI 318: 26.11.1.2(b)	---

REQUIRED SPECIAL INSPECTIONS AND TESTS OF SOILS (CBC TABLE 1705.6)

TYPE	INSPECTION FREQUENCY	REFERENCED STANDARD	IBC REFERENCE
1. VERIFY MATERIALS BELOW SHALLOW FOUNDATIONS ARE ADEQUATE TO ACHIEVE THE DESIGN BEARING CAPACITY.	PERIODIC	---	---
2. VERIFY EXCAVATIONS ARE EXTENDED TO PROPER DEPTH AND HAVE REACHED PROPER MATERIAL.	PERIODIC	---	---
3. PERFORM CLASSIFICATION AND TESTING OF COMPACTED FILL MATERIALS.	PERIODIC	---	---
4.VERIFY USE OF PROPER MATERIALS, DENSITIES AND LIFT THICKNESSES DURING PLACEMENT AND COMPACTION OF COMPACTED FILL.	CONTINUOUS	---	---
5. PRIOR TO PLACEMENT OF COMPACTED FILL, INSPECT SUBGRADE AND VERIFY THAT SITE HAS BEEN PREPARED PROPERLY.	PERIODIC	---	---

REQUIRED SPECIAL INSPECTIONS AND TESTS OF MASONRY CONSTRUCTION - LEVEL B QUALITY ASSURANCE (RISK CATEGORY I-III, TMS 602, TABLE 4):

MINIMUM TESTS	
1. VERIFICATION OF SLUMP FLOW AND VISUAL STABILITY INDEX (VSI) AS DELIVERED TO THE PROJECT SITE IN ACCORDANCE WITH SPECIFICATION ARTICLE 1.5 B.1.B.3 FOR SELF-CONSOLIDATING GROUT.	
2. VERIFICATION OF f'_m IN ACCORDANCE WITH SPECIFICATION ARTICLE 1.4 B PRIOR TO CONSTRUCTION, EXCEPT WHERE SPECIFICALLY EXEMPTED BY TMS 402.	
MINIMUM SPECIAL INSPECTION	**FREQUENCY**
1. VERIFY COMPLIANCE WITH THE APPROVED SUBMITTALS	PERIODIC
2. AS MASONRY CONSTRUCTION BEGINS, VERIFY THAT THE FOLLOWING ARE IN COMPLIANCE: A. PROPORTIONS OF SITE-PREPARED MORTAR B. CONSTRUCTION OF MORTAR JOINTS. PERIODIC D. LOCATION OF REINFORCEMENT AND CONNECTORS.	 PERIODIC PERIODIC PERIODIC
3. PRIOR TO GROUTING, VERIFY THAT THE FOLLOWING ARE IN COMPLIANCE: A. GROUT SPACE B. GRADE, TYPE AND SIZE OF REINFORCEMENT AND ANCHOR BOLTS. C. PLACEMENT OF REINFORCEMENT AND CONNECTORS. D. PROPORTIONS OF SITE-PREPARED GROUT. E. CONTRUCTION OF MORTAR JOINTS.	 PERIODIC PERIODIC PERIODIC PERIODIC PERIODIC
4. VERIFY DURING CONSTRUCTION: A. SIZE AND LOCATION OF STRUCTURAL ELEMENTS. B. TYPE, SIZE AND LOCATION OF ANCHORS, INCLUDING OTHER DETAILS OF ANCHORAGE OF MASONRY TO STRUCTURAL MEMBERS, FRAMES OR OTHER CONSTRUCTION. C. WELDING OF REINFORCEMENT D. PREPARATION, CONSTRUCTION AND PROTECTION OF MASONRY DURING COLD WEATHER (TEMPERATURE BELOW 40°F OR HOT WEATHER (TEMPERATURE ABOVE 90°F). F. PLACEMENT OF GROUT.	 PERIODIC PERIODIC CONTINUOUS PERIODIC CONTINUOUS
5. OBSERVE PREPARATION OF GROUT SPECIMENS, MORTAR SPECIMENS AND/OR PRISMS. PERIODIC	PERIODIC
6. POST-INSTALLED ANCHORS AND DOWELS	PERIODIC

OTHER SPECIAL INSPECTIONS

TYPE	INSPECTION FREQUENCY	REFERENCED STANDARD	IBC REFERENCE
1705.12.1 & 1705.13.2 STRUCTURAL WOOD. NAILING, BOLTING, ANCHORING AND OTHER FASTENING OF ELEMENTS OF THE MAIN LATERAL FORCE-RESISTING SYSTEM, INCLUDING WOOD DIAPHRAGMS, COLLECTORS, BRACES AND HOLDOWNS.	PERIODIC	---	1705.11.1 1705.12.2 2306.2 2306.3 2308.3 2308.6
1705.13.6 PLUMBING, MECHANICAL AND ELECTRICAL COMPONENTS SPECIAL INSPECTION SHALL BE REQUIRED FOR THE FOLLOWING: 1. ANCHORAGE OF ELECTRICAL EQUIPMENT (SEISMIC DESIGN CATEGORY E).	PERIODIC	---	1705.12.6 2701-2702 2801 2901-2902
1704.3.2, 1705.13.1.1 & 1705.14.1.1 SEISMIC FORCE-RESISTING SYSTEMS NONDESTRUCTIVE TESTING OF STRUCTURAL STEEL IN THE SEISMIC FORCE-RESISTING SYSTEMS OF BUILDINGS AND STRUCTURES ASSIGNED TO SEISMIC DESIGN CATEGORY E SHALL BE PERFORMED IN ACCORDANCE WITH QUALITY ASSURANCE REQUIREMENTS OF AISC 341.	PERIODIC	---	1704.3.2 1705.12.1.1 1705.13.1.1 2205.2.1
1705.13.1.2 & 1705.14.1.2 STRUCTURAL STEEL ELEMENTS. NONDESTRUCTIVE TESTING OF STRUCTURAL STEEL ELEMENTS IN THE SEISMIC FORCE-RESISTING SYSTEMS OF BUILDINGS AND STRUCTURES ASSIGNED TO SEISMIC DESIGN CATEGORY E OTHER THAN THOSE COVERED IN SECTION 1706.13.1.1, INCLUDING STRUTS, COLLECTORS, CHORDS AND FOUNDATION ELEMENTS, SHALL BE PERFORMED IN ACCORDANCE WITH THE QUALITY ASSURANCE REQUIREMENTS OF AISC 341.	PERIODIC	---	1704.3.2 1705.2.1 1705.12.1.2 1705.13.1.2 2202 2205.2.2

STRUCTURAL OBSERVATION PROGRAM

1. STRUCTURAL OBSERVATION SHALL BE CONDUCTED BY A REGISTERED CIVIL OR STRUCTURAL ENGINEER. THE CONTRACTOR SHALL PROVIDE 72 HOURS NOTICE TO THE ENGINEER PRIOR TO REQUIRED VISIT.
2. STRUCTURAL OBSERVATION DOES NOT INCLUDE OR WAIVE THE INSPECTIONS REQUIRED BY SECTIONS 108, 1701 OR OTHER SECTIONS OF THE CODE.
3. ALL OBSERVED DEFICIENCIES SHALL BE REPORTED IN WRITING TO THE OWNER'S REPRESENTATIVE, SPECIAL INSPECTOR, CONTRACTOR & INSPECTION SERVICES. THE STRUCTURAL OBSERVER SHALL SUBMIT A WRITTEN STATEMENT TO INSPECTION SERVICES THAT SITE VISITS HAVE BEEN MADE AND IDENTIFYING ANY REPORTED DEFICIENCIES THAT HAVE NOT BEEN RESOLVED. THE STRUCTURE WILL NOT BE IN COMPLIANCE UNTIL THE DESIGNER HAS NOTIFIED INSPECTION SERVICES THAT ALL DEFICIENCIES ARE RESOLVED.
4. STRUCTURAL OBSERVATION SHALL BE CONDUCTED AT THE FOLLOWING STAGE(S) OF CONSTRUCTION:
   A. PRIOR TO PLACING CONCRETE AT LID OF SURGE TANK (AFTER INSTALLATION OF ALL DOWELS, REINFORCING AND FORMWORK/SHORING
   B. SUBSTANTIAL COMPLETION OF CONSTRUCTION (PRIOR TO COVERING ROOF SHEATHING).
5. PRIOR TO FINAL INSPECTION, SEOR WILL SUBMIT A LETTER TO THE GOVERNING JURISDICTION CERTIFYING COMPLETED STRUCTURAL ELEMENTS.

ABBREVIATIONS

A.A.	ADHESIVE ANCHOR	FOM	FACE OF MASONRY	PSF	POUNDS PER SQUARE FOOT
AB	ANCHOR BOLT	FOS	FACE OF STUD	PSI	POUNDS PER SQUARE INCH
ABV	ABOVE	FOW	FACE OF WALL	PSL	PARALLEL STRAND LUMBER
A.D.	ADHESIVE DOWEL	FP	FIREPROOFING	PT	PRESSURE TREATED, PRETENSIONED
ADDL	ADDITIONAL	FRMG	FRAMING	R, RAD	RADIUS
ADJ	ADJACENT	FRP	FIBER REINFORCED POLYMER	REINF	REINFORCEMENT
AFF	ABOVE FINISH FLOOR	FRT	FIRE-RETARDANT TREATED	REQD	REQUIRED
ALT	ALTERNATE	FS	FAR SIDE, FIELD SCREW	REV	REVISE, REVISION
APPROX, ±	APPROXIMATELY	FTG	FOOTING	RJ	ROOF JOIST
ATR	ALL-THREADED ROD	GA, ga	GAGE, GAUGE	RO	ROUGH OPENING
BLDG	BUILDING	GALV	GALVANIZED	RR	ROOF RAFTER
BLKG	BLOCKING	GLB	GLU-LAM BEAM	R/R	REMOVE & REPLACE
BLW	BELOW	GYP BD	GYPSUM BOARD	RS	ROUGH SAWN
BM	BEAM	(H), HORIZ	HORIZONTAL	S.A.D.	SEE ARCH DOCUMENTS
BN	BOUNDARY NAIL	HD	HOLDOWN	SC	SLIP-CRITICAL
BOF	BOTTOM OF FOOTING	HDG	HOT DIPPED GALVANIZED	S.C.D.	SEE CIVIL DOCUMENTS
BOT	BOTTOM	HDR	HEADER	SCHED	SCHEDULE
BRG	BEARING	HGR	HANGER	SECT	SECTION
BSMT	BASEMENT	HI	HIGH	S.E.D.	SEE ELEC DOCUMENTS
BTWN	BETWEEN	HK	HOOK	SEOR	STRUCTURAL ENGINEER OF RECORD
C	CHANNEL, CAMBER	HP	HIGH POINT	SF	SQUARE FEET
CANT	CANTILVEVER(ED)	HSB	HIGH STRENGTH BOLT	SHT	SHEET
CIP	CAST-IN-PLACE	HSS	HOLLOW STRUCTURAL STEEL	SHTG	SHEATHING
CJ	CONTROL JOINT, CLG JOIST	HT	HEIGHT	SIM	SIMILAR
CJP	COMPLETE JOINT PENETRATION	ID	INSIDE DIAMETER	SL	SLOPE
CL	CENTERLINE	INFO	INFORMATION	S.M.D.	SEE MECH DOCUMENTS
CLG	CEILING	JT	JOINT	SMS	SHEET METAL SCREW
CLR	CLEAR	K	KIPS, 1000 LBS	S.O.G.	SLAB ON GRADE
CMU	CONCRETE MASONRY UNIT	KO	KNOCK-OUT	S.P.D.	SEE PLUMBING DOCUMENTS
COL	COLUMN	KP	KING POST	SPEC	SPECIFICATION(S)
CONC	CONCRETE	L	ANGLE	SQ	SQUARE
CONN	CONNECTION	LB(S), #	POUND(S)	SS	STAINLESS STEEL
CONST	CONSTRUCTION	L_d	DEVELOPMENT LENGTH	ST	SNUG-TIGHTENED
CONT	CONTINUOUS	L_{dh}	HOOK DEVELOPMENT LENGTH	STAG	STAGGER(ED)
COORD	COORDINATE	LLBB	LONG LEG BACK-TO-BACK	STD	STANDARD
CSK	COUNTERSINK	LLH	LONG LEG HORIZONTAL	STL	STEEL
CTR	CENTER(ED)	LLV	LONG LEG VERTICAL	STRUC/STR	STRUCTURAL
CY	CUBIC YARD	LO	LOW	SUBST	SUBSTITUTE
d, D	PENNY (NAIL SIZE), DIAMETER	LOC	LOCATION	SUSP	SUSPENDED
DBL	DOUBLE	LONG	LONGITUDINAL	SW	SHEAR WALL
DEMO	DEMOLISH, DEMOLITION	LP	LOW POINT	SYM	SYMMETRICAL
DET	DETAIL	L_s	LAP SPLICE LENGTH	T&B	TOP AND BOTTOM
DF	DOUGLAS FIR	LSL	LAMINATED STRAND LUMBER	T&G	TONGUE AND GROOVE
DIA, ϕ	DIAMETER	LVL	LAMINATED VENEER LUMBER	THK	THICK (NESS)
DIAG	DIAGONAL	LWC	LIGHTWEIGHT CONCRETE	THD	THREADED
DIAPH	DIAPHRAGM	MB	MACHINE BOLT	TN	TOE NAIL
DIM	DIMENSION	MDL	MODEL	TO	TOP OF
DIST	DISTANCE	MECH	MECHANICAL	TOC	TOP OF CONCRETE
DN	DOWN	MFR	MANUFACTURER	TOF	TOP OF FOOTING
DO	DITTO (REPEAT)	MPE	MECH, ELEC & PLUMBING	TOFR	TOP OF FRAMING
DWG(S)	DRAWING(S)	MTL	METAL	TOS	TOP OF STEEL
(E), EXIST	EXISTING	(N)	NEW	TOT	TOTAL
EA	EACH	NF	NEAR FACE	TOW	TOP OF WALL
E.A.	EXPANSION ANCHOR	NIC	NOT IN CONTRACT	TRANS	TRANSVERSE
EF	EACH FACE	NO, #	NUMBER	TS	TOP OF SHTG
EJ	EXPANSION JOINT	NOM	NOMINAL	TSG	TAPERED STEEL GIRDER
EL	ELEVATION	NS	NEAR SIDE	TYP	TYPICAL
ELEC(T)	ELECTRICAL	NSG	NON-SHRINK GROUT	UON	UNLESS OTHERWISE NOTED
ELEV	ELEVATOR, ELEVATION	NTS	NOT TO SCALE	(V), VERT	VERTICAL
EMB(ED)	EMBEDMENT	NWC	NORMAL WEIGHT CONCRETE	VIF	VERIFY IN FIELD
EN	EDGE NAIL	o/	OVER	W	WIDE FLANGE, WIDTH
EQ	EQUAL	oc	ON CENTER	w/	WITH
ES	EACH SIDE	OD	OUTSIDE DIAMETER	WHS	WELDED HEADED STUD
EW	EACH WAY	OH	OPPOSITE HAND	w/o	WITHOUT
EXP	EXPANSION	OPNG	OPENING	WP	WORK POINT
EXT	EXTERIOR	OS	OVERSIZE(D)	WS	WOOD SCREW
FDN	FOUNDATION	OWSJ	OPEN WEB STEEL JOIST	WT	WEIGHT
FF	FINISHED FLOOR	PAF	POWER ACTUATED FASTENER	WTS	WELDED THREADED STUD
FJ	FLOOR JOIST	PCF	POUNDS PER CUBIC FOOT	WWR	WELDED WIRE REINFORCING
FLR	FLOOR	PERP	PERPENDICULAR	XS	EXTRA STRONG
FN	FIELD NAIL	PJP	PARTIAL JOINT PENETRATION	XXS	DOUBLE EXTRA STRONG
FO	FACE OF	PL	PLATE		
FOC	FACE OF CONCRETE	PP	PER PLAN		

CITY OF SANTA CLARITA
BUILDING & SAFETY
APPROVED
Under SCMC Titles 18, 19, 20, 21, 24, 25
Sep 16, 2025
F. Svendsen
BLD25-00576 (ARCH)
The approved plans must be available at the construction site at all times. Changes or alterations to approved plans shall not be made without written permission from the City of Santa Clarita Building & Safety Division. The approval of these plans shall not be construed to permit or approve any violation of the applicable codes, ordinances, or other laws.

REVIEWED BY: PM - DESIGN 09/30/2025 EXECUTION DATE
REVIEWED BY: PM - CONSTRUCTION 09/30/2025 EXECUTION DATE

IN ACCORDANCE WITH RESOLUTION No. 19-6, AS A RESOLUTION OF THE CITY COUNCIL OF THE CITY OF SANTA CLARITA DELEGATING DISCRETIONARY AUTHORITY TO THE DIRECTOR OF PUBLIC WORKS, DIRECTOR OF RECREATION AND COMMUNITY SERVICES, DIRECTOR OF NEIGHBORHOOD SERVICES, CITY ENGINEER, AND ASSISTANT CITY ENGINEERS TO APPROVE PLANS AND DESIGNS FOR THE CONSTRUCTION OF OR IMPROVEMENTS TO PUBLIC PROPERTY FOR PURPOSES OF DESIGN IMMUNITY PURSUANT TO GOVERNMENT CODE SECTION 830.6 FOR THE CITY OF SANTA CLARITA, I DO HEREBY EXERCISE THE DISCRETION DELEGATED TO ME AND APPROVE THE PLAN OR DESIGN, OR AMENDMENT OR MODIFICATION TO THE PLAN OR DESIGN, OR A CONSTRUCTION OF, OR AN IMPROVEMENT TO THE PUBLIC FACILITY, STRUCTURE, OR PROPERTY TO WHICH THIS STATEMENT, MY SIGNATURE AND DATE IS AFFIXED.

REGISTERED PROFESSIONAL ENGINEER ALEXANDROS G. BLETSOS No. 5659 STRUCTURAL STATE OF CALIFORNIA
Alexandros Bletsos
SIGNED 04.30.2025

SPIRE STRUCTURAL ENGINEERING
26461 Rancho Parkway South Lake Forest, CA 92630 tel: 949.916.3440
www.spirestructures.com
JOB#: 24PAC01 ENG: AGB

PREPARED BY ALEXANDROS BLETSOS PROJECT ENGINEER
R.S.E. NO. S5659
EXP. 09/30/2025
DRAWN BTM
SCALE AS SHOWN
DESIGNED AGB
CHECKED AGB
DATE 02/17/2020

TITLE
DETAILS

C258
NEWHALL PARK POOL
PUMP ROOM RENOVATION PLANS
SANTA CLARITA CA

SHEET **S0.2**
22 OF 61 SHEETS
JOB NO. C258

Xrefs: C258 Titleblock.dwg
Dimscale = 1; LTscale = 1; PSltscale = 1; ACAD Ver. = 23.0s (LMS Tech); Visretain = 1
Docusign Envelope ID: F28B5F90-223C-42A7-9ED1-46869B54D361
R:\C258\Engineering\C258-04 (100% CD)\sheets\C258-04 S0.2 GENERAL NOTES.dwg - Tab: 22 - by jpenderghast on 09/29/25 at 2:23:54 PM

Sep. 29, 2025

SPALLING CONCRETE REPAIRS:
1. REMOVE DIRT & LOOSE CONCRETE.
2. IF REBAR IS EXPOSED, CLEAN & REMOVE RUST USING A WIRE WASH.
3. PAINT REBAR w/ SIKAGARD P 8100 AP OR EQUIVALENT.
4. PAINT CONCRETE w/ SIKALATEX OR EQUIVALENT.
5. PATCH CONCRETE w/ SIKATOP-123 PLUS OR EQUIVALENT.

SMALL CONCRETE CRACK REPAIRS (¼" MAX):
1. REMOVE DIRT & LOOSE CONCRETE FROM THE CRACK USING A WIRE BRUSH.
2. WIDEN THE CRACK (IF NEEDED).
3. FILL CRACK w/ SIKADUR CRACK FIX OR EQUIVALENT.

TYPICAL SURGE TANK REPAIRS (12)
SCALE: NONE

CITY OF SANTA CLARITA
BUILDING & SAFETY
APPROVED
Under SCMC Titles 18, 19, 20, 21, 24, 25
Sep 16, 2025
F. Svendsen
BLD25-00576 (ARCH)
The approved plans must be available at the construction site at all times. Changes or alterations to approved plans shall not be made without written permission from the City of Santa Clarita Building & Safety Division. The approval of these plans shall not be construed to permit or approve any violation of the applicable codes, ordinances, or other laws.

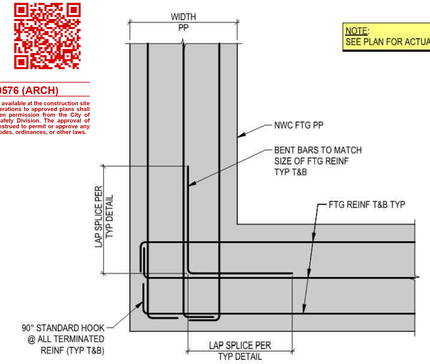

CASE A:
CORNER

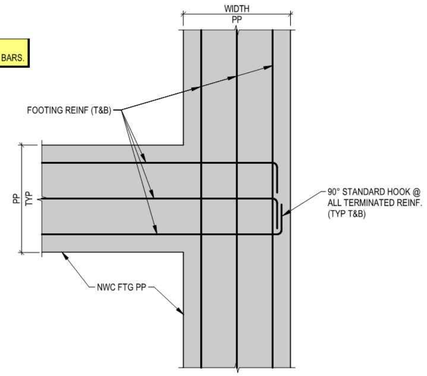

CASE B:
T-INTERSECTION

TYPICAL CONTINUOUS FOOTING INTERSECTIONS (6)
SCALE: NONE

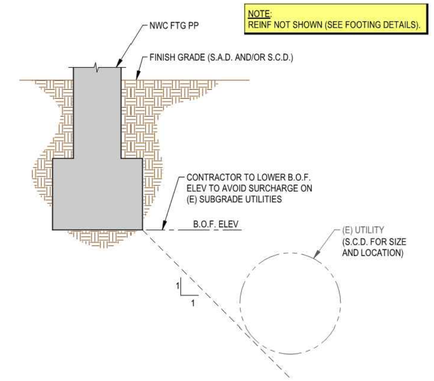

TYPICAL FOOTING PARALLEL TO (E) UTILITY (3)
SCALE: NONE

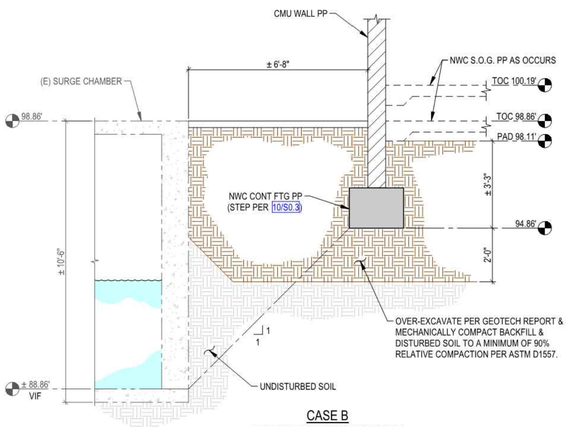

CASE B
DROPPED FTG @ (E) SURGE CHAMBER

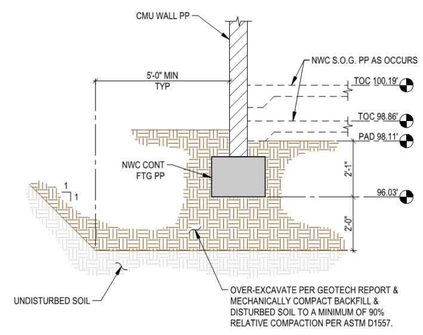

CASE A
TYPICAL CONDITION

NOTE:
SEE GEOTECHNICAL REPORT FOR ADDL INFO.

TYPICAL OVER-EXCAVATION SECTION (8)
SCALE: NONE

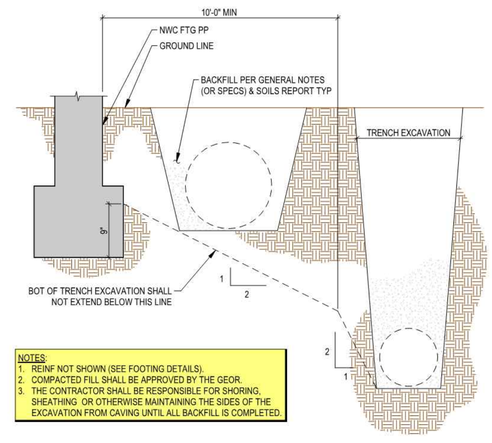

NOTES:
1. REINF NOT SHOWN (SEE FOOTING DETAILS).
2. COMPACTED FILL SHALL BE APPROVED BY THE GEOR.
3. THE CONTRACTOR SHALL BE RESPONSIBLE FOR SHORING, SHEATHING OR OTHERWISE MAINTAINING THE SIDES OF THE EXCAVATION FROM CAVING UNTIL ALL BACKFILL IS COMPLETED.

TYPICAL EXCAVATIONS PARALLEL TO FOOTING (5)
SCALE: NONE

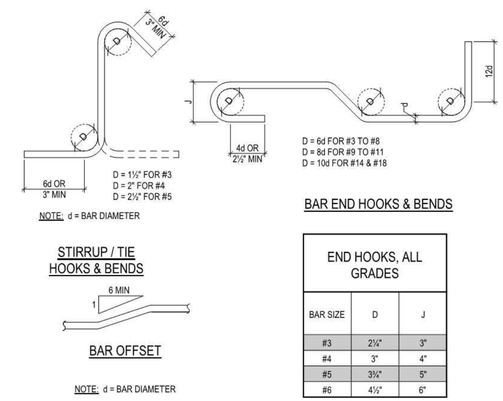

END HOOKS, ALL GRADES

BAR SIZE	D	J
#3	2¼"	3"
#4	3"	4"
#5	3¾"	5"
#6	4½"	6"

TYPICAL REINFORCEMENT BEND DETAILS (2)
SCALE: NONE

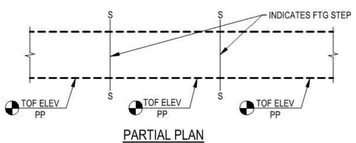

PARTIAL PLAN

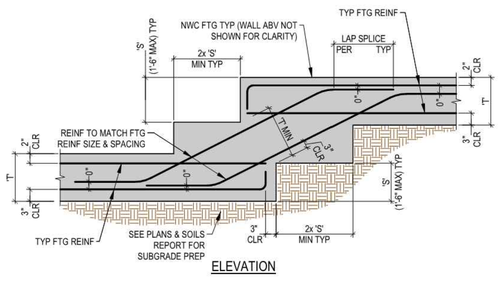

ELEVATION

TYPICAL STEPPED CONTINUOUS FOOTING (10)
SCALE: NONE

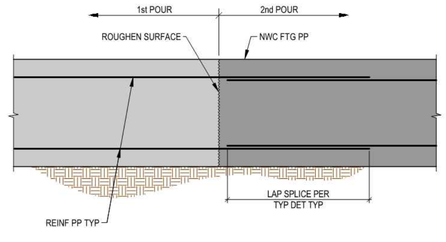

NOTE:
APPROVED MECH COUPLERS MAY BE USED IN LIEU OF LAP SPLICES FOR #11 AND SMALLER REINF.

TYPICAL CONTINUOUS FOOTING CONSTRUCTION JOINT (7)
SCALE: NONE

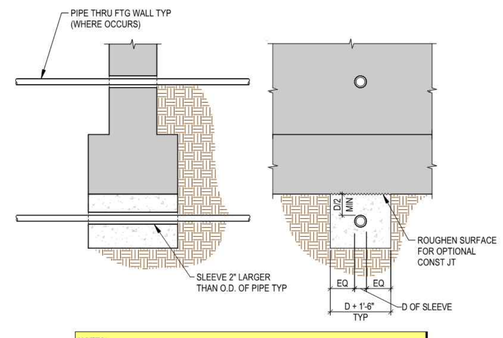

NOTES:
1. REINF NOT SHOWN (SEE FOOTING DETAILS).
2. IF PIPE IS LOCATED AT AREA OF FTG, LOWER FTG SO PIPE PASSES THRU FTG WALL.
3. FOR PIPES 3'-0" OR LESS BELOW FTG, PROVIDE SLEEVE OR WRAP w/ 1" FOAM AND NWC OR SLURRY AS SHOWN.
4. FOR PIPES MORE THAN 3'-0" BELOW FTG, COMPACT BACKFILL OVER PIPE TO 90% RELATIVE COMPACTION OR USE STEPPED FTG.
5. BACKFILL SHALL BE APPROVED BY GEOR.

TYPICAL PIPES PERPENDICULAR TO FOOTING (4)
SCALE: NONE

NOTES:
1. ALL DETAILING OF REINF SHALL COMPLY WITH THIS SCHEDULE UNLESS SPECIFICALLY DETAILED OTHERWISE.
2. REINF DEVELOPMENT LENGTH AND SPLICE TABLE IS BASED ON UNCOATED GRADE 60 STEEL PER ACI 318 CHAPTER 25 AND SECTION 18.8.5 (CONC) AND TMS 530 SECTION 3.3 (CMU).
3. d_b = BAR DIAMETER.
4. TOP REINF IS HORIZONTAL REINF THAT HAS MORE THAN 12" OF CONCRETE PLACED BELOW IT.
5. LAP LENGTHS SHOWN MEET REQUIREMENTS FOR CLASS "B" SPLICE.
6. CLEAR SPACING OF BARS BEING DEVELOPED OR SPLICED SHALL NOT BE LESS THAN THE LARGER OF 2 BAR DIAMETERS OR 2". CLEAR COVER SHALL NOT BE LESS THAN THE LARGER OF THE BAR DIAMETER SIZE OR PER GENERAL NOTES.
7. A STANDARD HOOK SHALL BE PROVIDED WHERE THE DEVELOPMENT LENGTH IS NOT POSSIBLE DUE TO SPACE RESTRICTIONS (REFER TO HOOKED BAR SCHEDULE).
8. SMALLER BAR LAP LENGTH MAY BE USED WHEN SPLICING BARS OF DIFFERING DIAMETERS.
9. L_d = DEVELOPMENT LENGTH (DEV), L_{dl} = LAP SPLICE (LAP).

REINFORCEMENT DEVELOPMENT & LAP LENGTHS (INCHES)

BASE MATERIAL	f'_c OR f'_m (PSI)	CONDITION	REINFORCEMENT SIZE #3	#4	#5	#6
NWC	3,000	STD DEV	17	22	28	33
		TOP DEV	23	29	37	43
		STD LAP	23	29	37	43
		TOP LAP	29	38	48	56
CMU	1,500	DEV OR LAP	27	36	45	54

HOOKED BAR DEVELOPMENT LENGTH, L_{dh} (INCHES)

f'_c (PSI)	REINFORCEMENT SIZE #3	#4	#5	#6
3,000	9	11	14	17

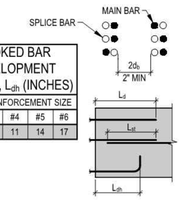

TYPICAL DEVELOPMENT & LAP LENGTHS (1)
SCALE: NONE

REVIEWED BY: 09/30/2025 PM/DESIGNER EXECUTION DATE
REVIEWED BY: 09/30/2025 PM - CONSTRUCTION EXECUTION DATE

IN ACCORDANCE WITH RESOLUTION No. 19-6, AS A RESOLUTION OF THE CITY COUNCIL OF THE CITY OF SANTA CLARITA DELEGATING DISCRETIONARY AUTHORITY TO THE DIRECTOR OF PUBLIC WORKS, DIRECTOR OF RECREATION AND COMMUNITY SERVICES, AND DIRECTOR OF DEVELOPMENT, TO EXECUTE CONTRACTS, AGREEMENTS, AND OTHER DOCUMENTS TO APPROVE PLANS AND DESIGNS FOR THE CONSTRUCTION OF IMPROVEMENTS TO PUBLIC PROPERTY FOR PURPOSES OF DESIGN IMMUNITY PURSUANT TO GOVERNMENT CODE SECTION 830.6 AND TO SAVE HARMLESS, INDEMNIFY AND DEFEND THE CITY, DIRECTOR, AND DEPUTIES FROM ANY LIABILITY, DEFENSE, OR AMENDMENT OR MODIFICATION TO THE PLAN OR DESIGN, OR A CONSTRUCTION OF, OR AN IMPROVEMENT TO THE PUBLIC FACILITY, STRUCTURE, OR PROPERTY TO WHICH THIS STATEMENT, MY SIGNATURE AND DATE IS AFFIXED.

REGISTERED PROFESSIONAL ENGINEER ALEXANDROS G. BLETSOS No. 5659 STRUCTURAL STATE OF CALIFORNIA
SIGNED 04.30.2025

SPIRE STRUCTURAL ENGINEERING
26461 Rancho Parkway South Lake Forest, CA 92630
949.916.3440
www.spirestructures.com
ENG: AGB
JOB#: 24PAC01

PREPARED BY
ALEXANDROS BLETSOS
PROJECT ENGINEER
R.S.E. NO. S5659
EXP: 09/30/2025

SCALE: AS SHOWN
DATE: 02/17/2020
DRAWN: BTM
DESIGNED: AGB
CHECKED: AGB

TITLE: DETAILS

C258
NEWHALL PARK POOL
PUMP ROOM RENOVATION
PLANS
SANTA CLARITA CA

SHEET S0.3
23 OF 61 SHEETS
JOB NO. C258

R:\C258\Engineering\C258-04 (1028 CD)\Sheets\C258-04 S0.3 TYPICAL DETAILS.dwg – Tab: 23 – by jpenderghast on 09/29/25 at 2:21:58 PM

Docusign Envelope ID: F28B5F90-223C-42A7-9ED1-46B6B54D381
Xrefs: C258 Titleblock.dwg
Dimscale = 1; LTscale = 1; PSltscale = 1; ACAD Ver. = 23.0s (LMS Tech); Visretain = 1

Sep. 29, 2025

TYPICAL S.O.G. REPAIR (12)
SCALE: NONE

NOTE:
SPECIAL INSPECTION / TENSION TESTING NOT REQD FOR A.D. (DOWELS ARE ONLY TO KEY THE S.O.G. VERTICALLY & ARE NONSTRUCTURAL).

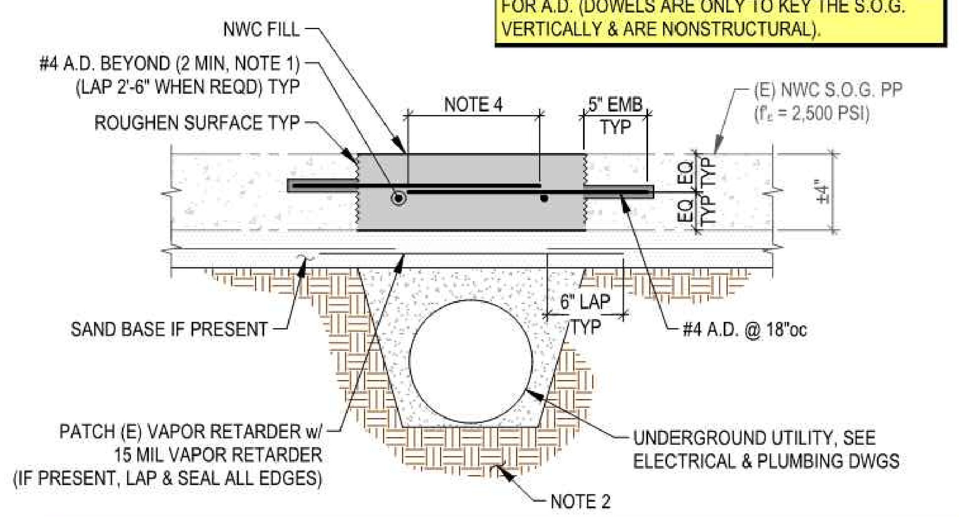

NOTES:
1. REPLACE w/ THK TO MATCH (E) S.O.G. (4" MIN) w/ #4 TO MATCH (E) SPACING EW (MAX SPACING = 18"oc EW) AT CENTER OF SLAB o/ COMPACTED SUBBASE.
2. MECHANICALLY COMPACT BACKFILL & DISTURBED SOIL TO A MINIMUM OF 90% RELATIVE COMPACTION PER ASTM D1557.
3. ⅜"Φ PEA GRAVEL MAY BE SUBSTITUTED FOR AGGREGATE.
4. 2'-6" LAP, WHERE LAP LENGTH IS NOT POSSIBLE DUE TO SPACE RESTRICTIONS PROVIDE A STANDARD HOOK (TAIL MAY BE ORIENTED HORIZ).
5. QUIKRETE 5000 CONC MIX (PRODUCT No. 1007, f'_c = 3,000 PSI MIN) OR SIMILAR BAGGED MIX MAY BE USED w/ CONTINUOUS SPECIAL INSPECTION DURING MIXING (PROVIDE SUBMITTAL).

TYPICAL CMU LINTEL (9)
SCALE: NONE

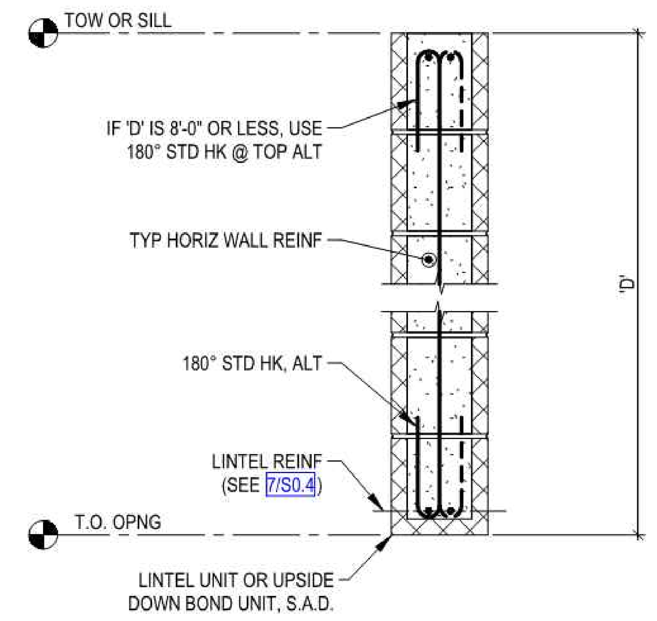

TYPICAL CMU EXPANSION ANCHOR RESTRICTED AREA (6)
SCALE: NONE

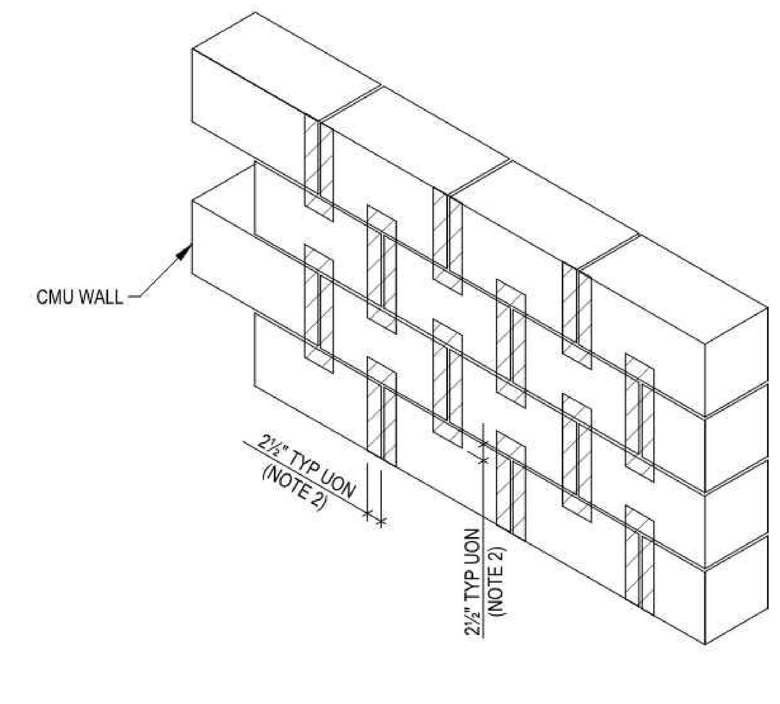

NOTES:
1. INSTALLATION OF EXPANSION ANCHORS SHALL NOT OCCUR IN THE SHADED AREAS.
2. 3" FOR ¾"Φ E.A. w/ 4¾" EMB.

TYPICAL CMU CONTROL JOINT (3)
SCALE: NONE

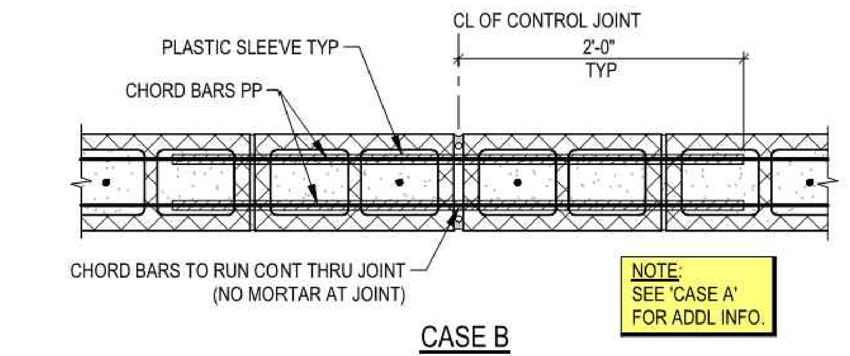

NOTE:
SEE 'CASE A' FOR ADDL INFO.

CASE B
@ CHORD BARS

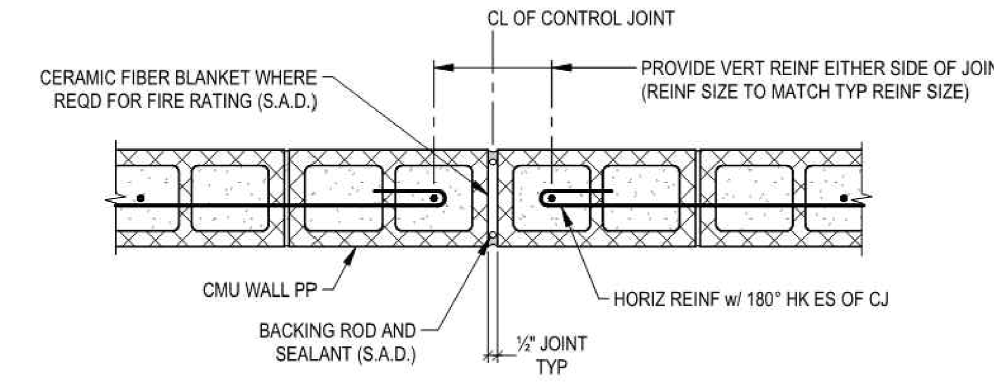

CASE A
TYPICAL CONDITION

NOTES:
1. SEE PLAN FOR CONTROL JOINT LOCATIONS.
2. ALL CELLS SHALL BE GROUTED SOLID.

TYPICAL S.O.G. DETAILS (10)
SCALE: NONE

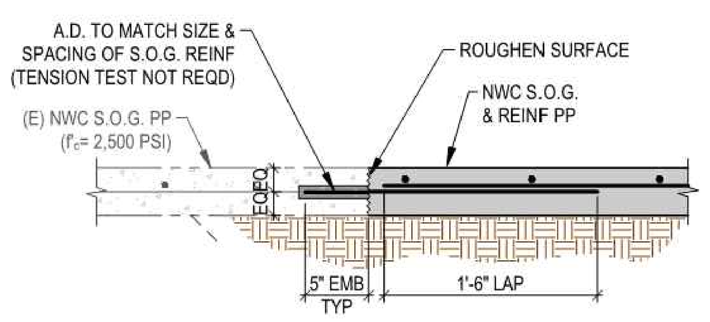

CASE D:
TIE-IN @ (E)

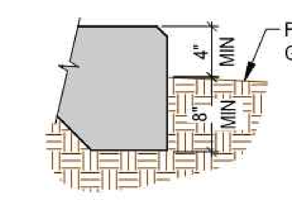

CASE B
TURNDOWN @ FG
(SEE CASE 'A' FOR ADDL INFO)

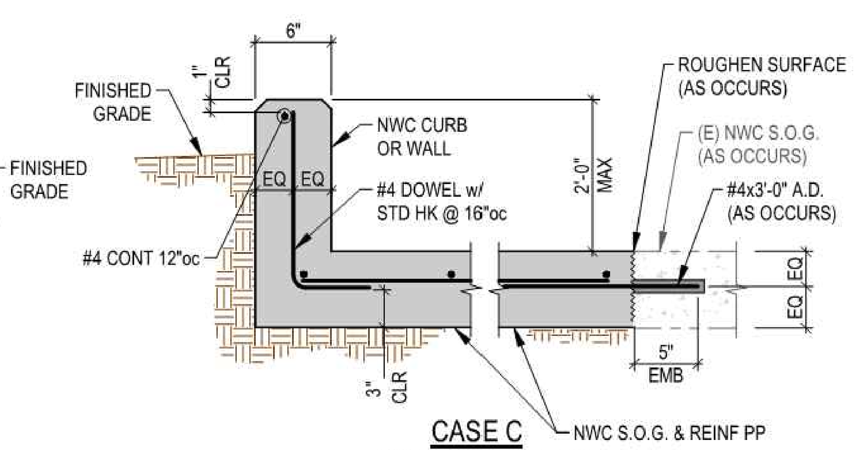

CASE C
CURB @ (N) OR (E) S.O.G.

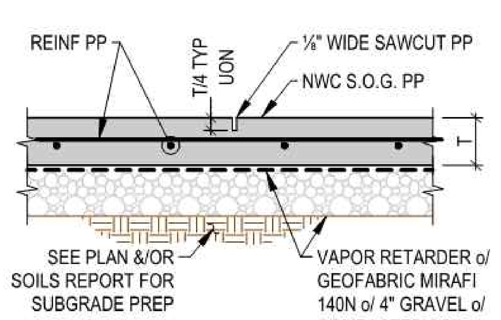

TYPICAL CONDITION

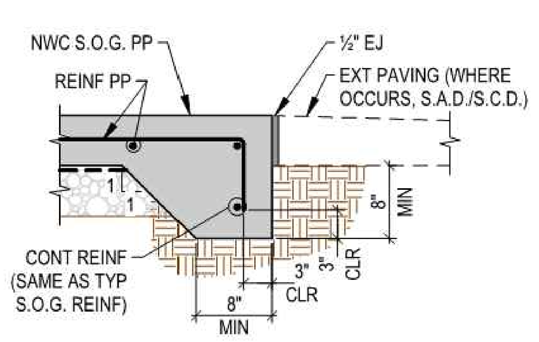

CASE A
TURNDOWN @ FS

NOTES:
1. T = S.O.G. THK PP.
2. SEE PLANS FOR APPROXIMATE LOCATIONS OF CONTROL JOINTS.
3. CONTROL JOINT SHALL BE A MAX OF 15'-0"oc APART EA WAY.
4. PROVIDE SAWCUT WITHIN 12 HOURS OF POUR.
5. FILL JOINTS WITH SEALANT IF REQUIRED (S.A.D.).
6. PROVIDE 90% COMPACTION BELOW S.O.G. PER ASTM D1557.

TYPICAL OPENINGS IN CMU WALL (7)
SCALE: NONE

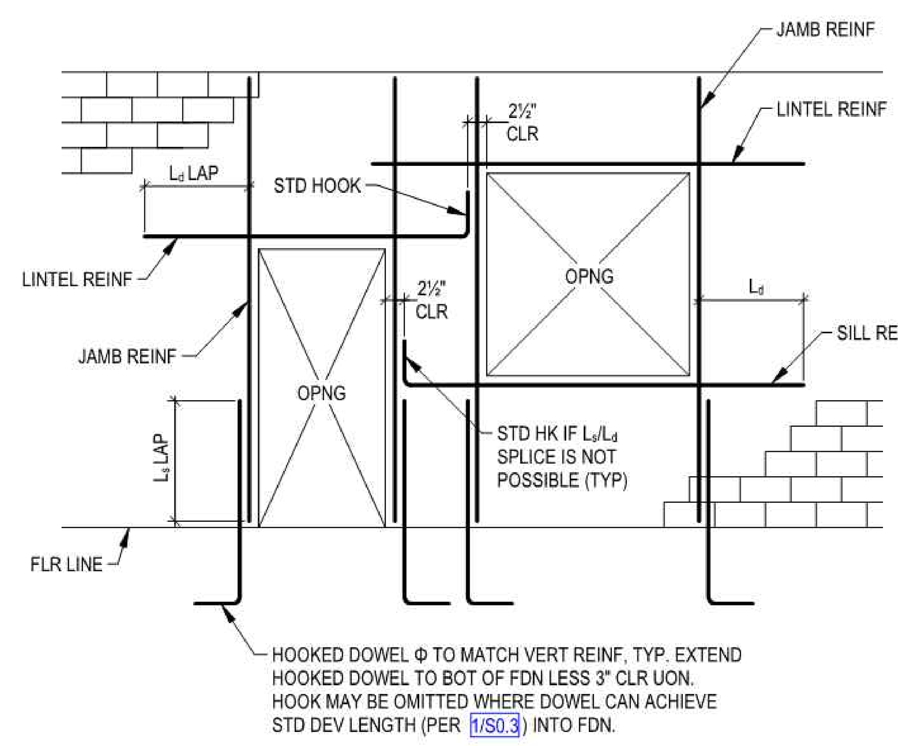

JAMB/LINTEL REINFORCING SCHEDULE

NOMINAL WALL THICKNESS	JAMB REINF	LINTEL REINF	SILL REINF
8"	#5	2- #5	2- #5

NOTES:
1. ADDL REINF NOT REQD @ OPNGS THAT FIT BETWEEN TYP WALL REINF.
2. AT SERIES OF OPENINGS WHERE PIER OR SPANDREL IS NARROWER THAN 120Φ, RUN TRIM REINFORCING CONTINUOUS.
3. REINF IN SCHED IS MIN UON ON PLANS.
4. L_d AND L_s:
5. WHERE ON OPNG OCCURS ABOVE ANOTHER, EXTEND ALL SILL AND LINTEL REINF 3'-0" BEYOND FURTHEST OPNG IN EACH DIRECTION.
6. WHERE OPNGS IN A HORIZ LINE ARE SPACED LESS THAN THE WIDTH OF THE MAX ADJACENT OPNG APART, RUN LINTEL AND SILL REINF CONTINUOUS BETWEEN OPNGS.
7. EXTEND VERT BARS FROM FLOOR TO FLOOR OR, WHERE OPNG INTERSECTS BAR, FROM FLOOR TO OPNG.
8. ADDL LINTEL INFO: 9/S0.4

TYPICAL EMBEDDED BOLTS IN CMU (5)
SCALE: NONE

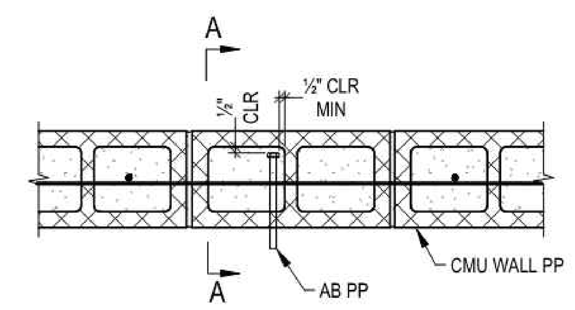

PLAN

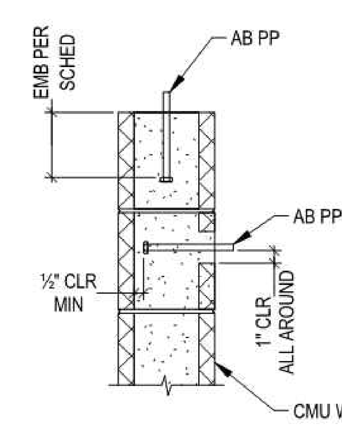

SECTION A-A
AB THRU FACE SHELL

AB EMB SCHEDULE

AB DIA	EMBED
½"	6"
⅝"	7"
¾"	8"
⅞"	10"
1"	12"

NOTES:
1. SEE GENERAL NOTES FOR AB SPECS.
2. CUT BLOCK FACE SHELL AS REQD TO ALLOW PLACMENT OF AB AND GROUT BETWEEN AB AND BLOCK.
3. ALL CELLS SHALL BE GROUTED SOLID.

TYPICAL CMU WALL INTERSECTIONS (2)
SCALE: NONE

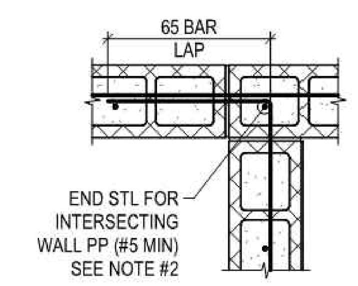

INTERSECTION

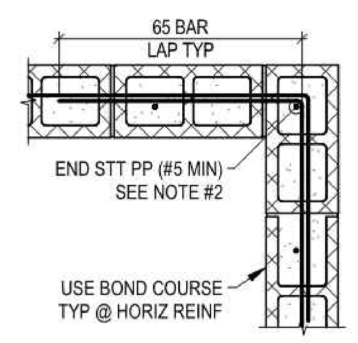

CORNER

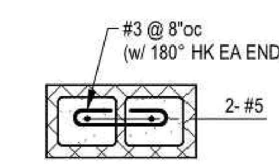

PIER

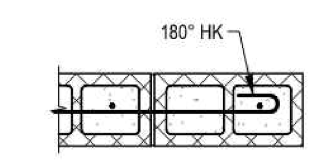

END

NOTES:
1. REBAR SIZES SHOWN ARE MINIMUMS, SEE GENERAL NOTES, PLANS & SCHEDULES FOR FURTHER REQUIREMENTS.
2. WHERE END STL IS GREATER THAN 2- #5 BARS, IT MAY BE PLACED AS 1 VERT BAR PER CELL BEGINNING WITH END CELL.

TYPICAL SLEEVE INSTALLATION THRU CMU WALL (4)
SCALE: NONE

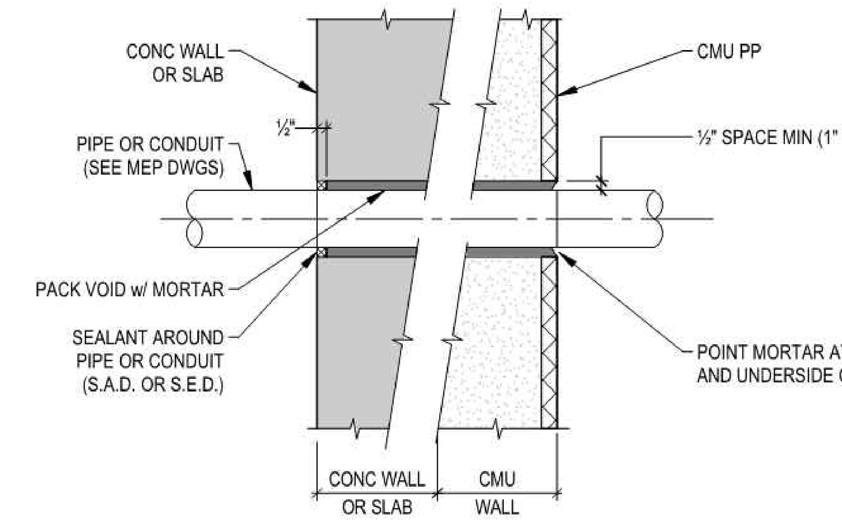

NOTES:
1. 6"Φ SLEEVES AND SMALLER SHALL BE EITHER SCHED 40 STEEL PIPE OR SCHED 60 PVC PIPE.
2. 8"Φ SLEEVES AND LARGER SHALL BE STEEL PIPE WITH ¼" MIN THICKNESS.
3. STEEL PIPE SHALL BE HOT DIP GALVANIZED AFTER FABRICATION.
4. SLEEVE MAY BE OMITTED IF HOLE IS CORE DRILLED. CORE DRILLING IS SUBJECT TO APPROVAL OF SEOR.
5. DO NOT CUT EXIST REINF. PERFORM PACHOMETER OR OTHER SURVEY TO LOCATE REINF PRIOR TO CUTTING OR CORING.

TYPICAL CMU ISOMETRIC (1)
SCALE: NONE

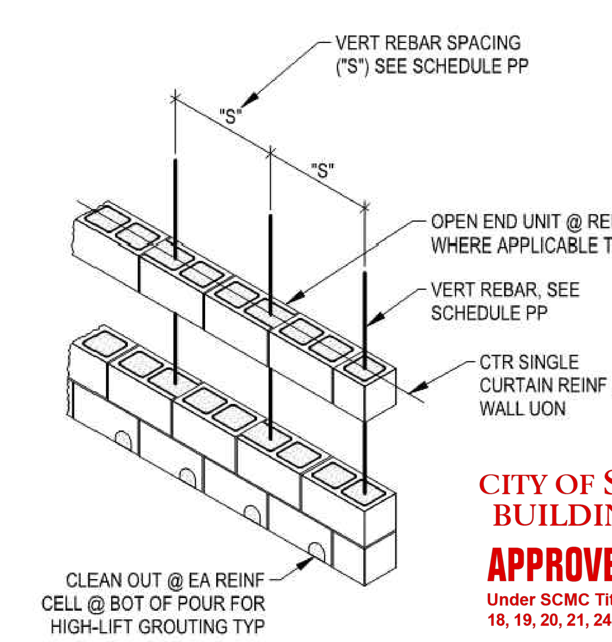

SINGLE CURTAIN

NOTES:
1. "S" = SPACING OF VERT REINF, SEE SCHED.
2. CONCAVE JOINTS TYPICAL UON.

CITY OF SANTA CLARITA
BUILDING & SAFETY
APPROVED
Under SCMC Titles 18, 19, 20, 21, 24, 25
Sep 16, 2025
F. Svendsen
BLD25-00576 (ARCH)
The approved plans must be available at the construction site at all times. Changes or alterations to approved plans shall not be made without written permission from the City of Santa Clarita Building & Safety Division. The approval of these plans shall not be construed to permit or approve any violation of the applicable codes, ordinances, or other laws.

REVIEWED BY: PM - DESIGN 09/30/2025 EXECUTION DATE
REVIEWED BY: PM - CONSTRUCTION 09/30/2025 EXECUTION DATE

IN ACCORDANCE WITH RESOLUTION No. 19-6, AS A RESOLUTION OF THE CITY COUNCIL OF THE CITY OF SANTA CLARITA DELEGATING DISCRETIONARY AUTHORITY TO THE DIRECTOR OF PUBLIC WORKS, DIRECTOR OF RECREATION AND COMMUNITY SERVICES, DIRECTOR OF NEIGHBORHOOD SERVICES, CITY ENGINEER, AND ASSISTANT CITY ENGINEERS TO APPROVE PLANS AND DESIGNS FOR THE CONSTRUCTION OF OR IMPROVEMENTS TO PUBLIC PROPERTY FOR PURPOSES OF DESIGN IMMUNITY PURSUANT TO GOVERNMENT CODE SECTION 830.6 FOR THE CITY OF SANTA CLARITA, I DO HEREBY EXERCISE THE DISCRETION DELEGATED TO ME AND APPROVE THE PLAN OR DESIGN, OR AMENDMENT OR MODIFICATION TO THE PLAN OR DESIGN, OR A CONSTRUCTION OF, OR AN IMPROVEMENT TO THE PUBLIC FACILITY, STRUCTURE, OR PROPERTY TO WHICH THIS STATEMENT, MY SIGNATURE AND DATE IS AFFIXED.

REGISTERED PROFESSIONAL ENGINEER ALEXANDROS G. BLETSOS No. 5659 STRUCTURAL STATE OF CALIFORNIA
SIGNED 04.30.2025

SPIRE STRUCTURAL ENGINEERING
26461 Rancho Parkway South Lake Forest, CA 92630 tel: 949.916.3440
www.spirestructures.com
JOB#: 24PAC01 ENG: AGB

PREPARED BY ALEXANDROS BLETSOS PROJECT ENGINEER
R.S.E. NO. S5659
EXP. 09/30/2025
DRAWN BTM | SCALE AS SHOWN
DESIGNED AGB
CHECKED AGB | DATE 02/17/2020

TITLE DETAILS

C258
NEWHALL PARK POOL
PUMP ROOM RENOVATION PLANS
SANTA CLARITA CA

SHEET S0.4
24 OF 61 SHEETS
JOB NO. C258

R:\C258\Engineering\C258-04 (100% CD)\sheets\C258-04 S0.4 TYPICAL DETAILS.dwg – Tab: 24 – by jpenderghast on 09/29/25 at 2:24:02 PM

Xrefs: C258 Titleblock.dwg
Dimscale = 1; LTscale = 1; PSltscale = 1; ACAD Ver. = 23.0s (LMS Tech); Visretain = 1

Docusign Envelope ID: F28B5F90-223C-42A7-9ED1-46869B54D361

Sep. 29, 2025

CITY OF SANTA CLARITA
BUILDING & SAFETY
APPROVED
Under SCMC Titles 18, 19, 20, 21, 24, 25
Sep 16, 2025
F. Svendsen
BLD25-00576 (ARCH)
The approved plans must be available at the construction site at all times. Changes or alterations to approved plans shall not be made without written permission from the City of Santa Clarita Building & Safety Division. The approval of these plans shall not be construed to permit or approve any violation of the applicable codes, ordinances, or other laws.

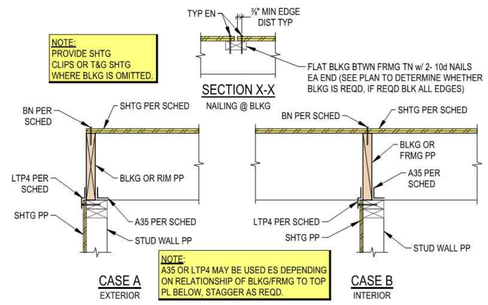

DIAPHRAGM SCHEDULE							
TYPE	SHTG	BLK'D	NAILING	SHEAR TRANSFER CLIPS		CAPACITY, PLF	
				A35	LTP4	WIND	SEISMIC
1	½" CDX	NO	10d @ 6/12	16"oc	24"oc	265*	190*
2	½" CDX	YES	10d @ 6/6/12	16"oc	24"oc	405	290
3	½" STRUCT 1	YES	10d @ 4/6/12	12"oc	16"oc	595	425
4	½" STRUCT 1	YES	10d @ 2½/4/12	6"oc	10"oc	895	640
5	½" STRUCT 1	YES	10d @ 2/3/12	6"oc	8"oc	1,025	730

NOTES:
1. ALL NAILS SHALL BE 10d COMMON.
2. FRAMING @ ADJOINING PANEL EDGES SHALL BE 3x MIN & NAILS SHALL STAGGERED WHERE SPACED 3"oc OR LESS.
3. UNBLOCKED DIAPHARGM NAILING: 10d @ EN/FN. EN = NAIL SPACING @ BOUNDARIES & CONT PANEL EGDES. FN = NAIL SPACING @ FIELD OF SHTG.
4. BLOCKED DIAPHRAGM NAILING: 10d @ BN/EN/FN. BN = NAIL SPACING @ BOUNDARIES & CONT PANEL EDGES. EN = NAIL SPACING @ OTHER PANEL EDGES. FN = NAIL SPACING @ FIELD OF SHTG.
5. SHEAR TRANSFER CLIPS SHALL BE INSTALLED CONT ALONG ALL SHEARWALL LINES IN ACCORDANCE WITH SCHEDULE ABOVE.
6. EITHER A35 OR LTP4 MAY BE USED FOR SHEAR TRANSFER PER SCHED AT CONTRACTOR'S OPTION.
7. A35 AND/OR LTP4 ARE REQD @ BOTH SIDES OF BLKG AT INTERIOR WALL LINES. STAGGER AS REQD.
8. CAPACITIES ARE BASED ON THE 2021 SPECIAL DESIGN PROVISIONS FOR WIND & SEISMIC (SDPWS), TABLES 4.2A (BLOCKED) & 4.2C (UNBLOCKED) DIVIDED BY 2.0 (WIND) & 2.8 (SEISMIC).
9. * = VALUES MAY BE INCREASED TO 360 PLF (WIND) & 255 PLF (SEISMIC) FOR CASE 1 (LOAD PERP TO LONG SIDE OF STAGGERED SHTG).

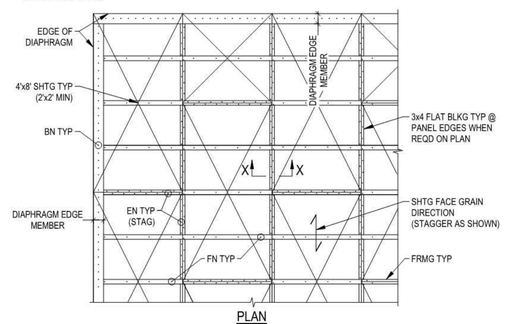

TYPICAL WOOD DIAPHRAGM (8)
SCALE: NONE

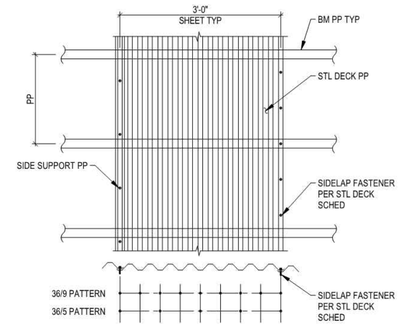

TYPICAL STEEL DECK ATTACHMENT (NON-COMPOSITE) (6)
SCALE: NONE

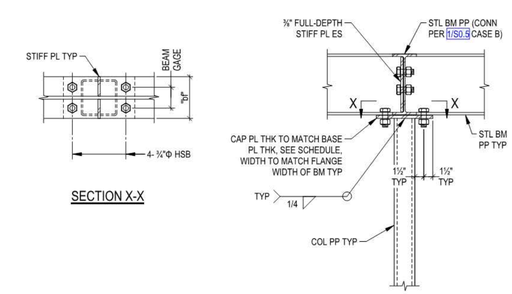

TYPICAL STEEL BEAM TO PIPE COLUMN CONNECTION (3)
SCALE: NONE

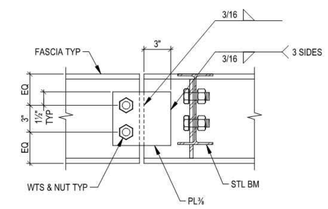

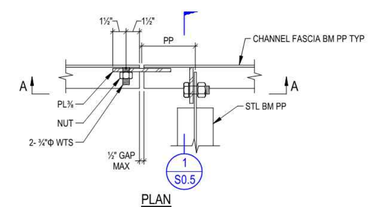

TYPICAL FASCIA BEAM SPLICE (5)
SCALE: NONE

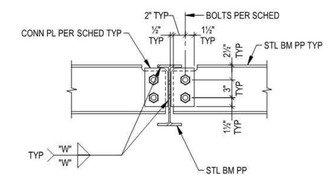

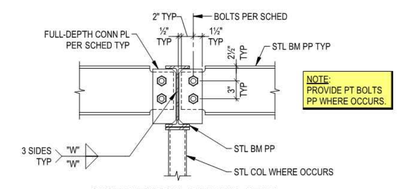

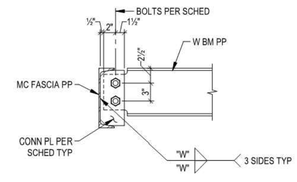

BEAM CONNECTION SCHEDULE			
NOMINAL MEMBER DEPTH	CONN PL THK "t"	WELD SIZE "W"	NUMBER BOLTS
8" & 10"	¾"	¼"	2

NOTES:
1. ALL BOLTS ARE ¾"Φ ASTM A325N.
2. BOLT HOLES TO BE STANDARD HOLES 1/16" GREATER THAN BOLT DIAMETER.
3. BOLTS TO BE SNUG-TIGHTENED, UON.

TYPICAL BOLTED BEAM CONNECTIONS (1)
SCALE: NONE

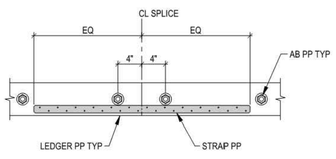

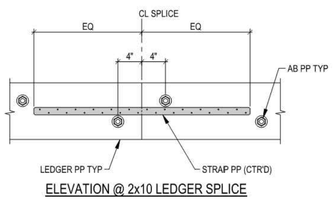

NOTE:
PROVIDE ONE STRAP (CTR'D) AT 2x6 LEDGER & TWO STRAPS AT 2x10 LEDGER.

TYPICAL LEDGER (10)
SCALE: NONE

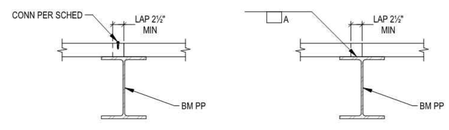

NOTE:
SEE 'METAL DECK SCHEDULE' FOR WELD 'A'.

TYPICAL STEEL DECK END JOINT CONNECTIONS (7)
SCALE: NONE

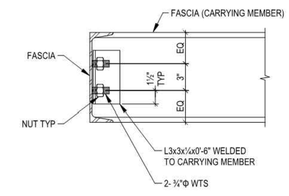

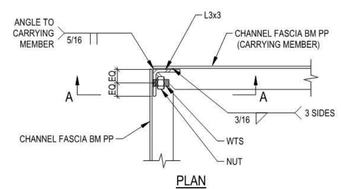

TYPICAL FASCIA CORNER CONNECTION (4)
SCALE: NONE

REVIEWED BY:	09/30/2025
Lead Engineer	EXECUTION DATE
PM/ DESIGNER	
REVIEWED BY:	09/30/2025
PM - CONSTRUCTION	EXECUTION DATE

IN ACCORDANCE WITH RESOLUTION No. 19-6, AS A RESOLUTION OF THE CITY COUNCIL OF THE CITY OF SANTA CLARITA DELEGATING DISCRETIONARY AUTHORITY TO THE DIRECTOR OF PUBLIC WORKS, DIRECTOR OF RECREATION AND COMMUNITY SERVICES, OR DESIGNEE TO REVIEW AND APPROVE PLANS AND DESIGNS FOR CERTAIN CONSTRUCTION OR IMPROVEMENTS TO PUBLIC PROPERTY FOR PURPOSES OF DESIGN IMMUNITY PURSUANT TO GOVERNMENT CODE SECTION 830.6, I HAVE REVIEWED AND APPROVED THE PLAN, DESIGN, OR AMENDMENT, MODIFICATION TO THE PLAN OR DESIGN, OR A CONSTRUCTION OF, OR AN IMPROVEMENT TO THE PUBLIC FACILITY, STRUCTURE, OR PROPERTY TO WHICH THIS STATEMENT, MY SIGNATURE AND DATE IS AFFIXED.

REGISTERED PROFESSIONAL ENGINEER
ALEXANDROS G. BLETSOS
No. 5659
STRUCTURAL
STATE OF CALIFORNIA
SIGNED 04.30.2025

SPIRE STRUCTURAL ENGINEERING
26401 Rancho Parkway South, Suite 144
Lake Forest, CA 92630
www.spirestructures.com
ENG: AGB
JOB# 24PAC01

PREPARED BY	ALEXANDROS BLETSOS
PROJECT ENGINEER	
R.S.E. NO.	S5659
EXP.	06/30/2025
SCALE	AS SHOWN
DRAWN	BTM
DESIGNED	AGB
CHECKED	AGB
DATE	02/17/2020

TITLE: DETAILS

C258 NEWHALL PARK POOL
PUMP ROOM RENOVATION
PLANS
SANTA CLARITA CA

SHEET S0.5
25 OF 61 SHEETS
JOB NO. C258

Docusign Envelope ID: F28B5F90-220C-42A7-9ED1-4686B8540381
Xrefs: C258 TitleBlock.dwg
Dimscale = 1, LTscale = 1, PSltscale = 1, ACAD Ver. = 23.0s (LMS Tech), Viewtem = 1
R:\C258\Engineering\C258-04 S0.5 TYPICAL DETAILS.dwg - Tab: 25 - by jenniferghost on 09/29/25 at 2:24:06 PM

Sep. 29, 2025

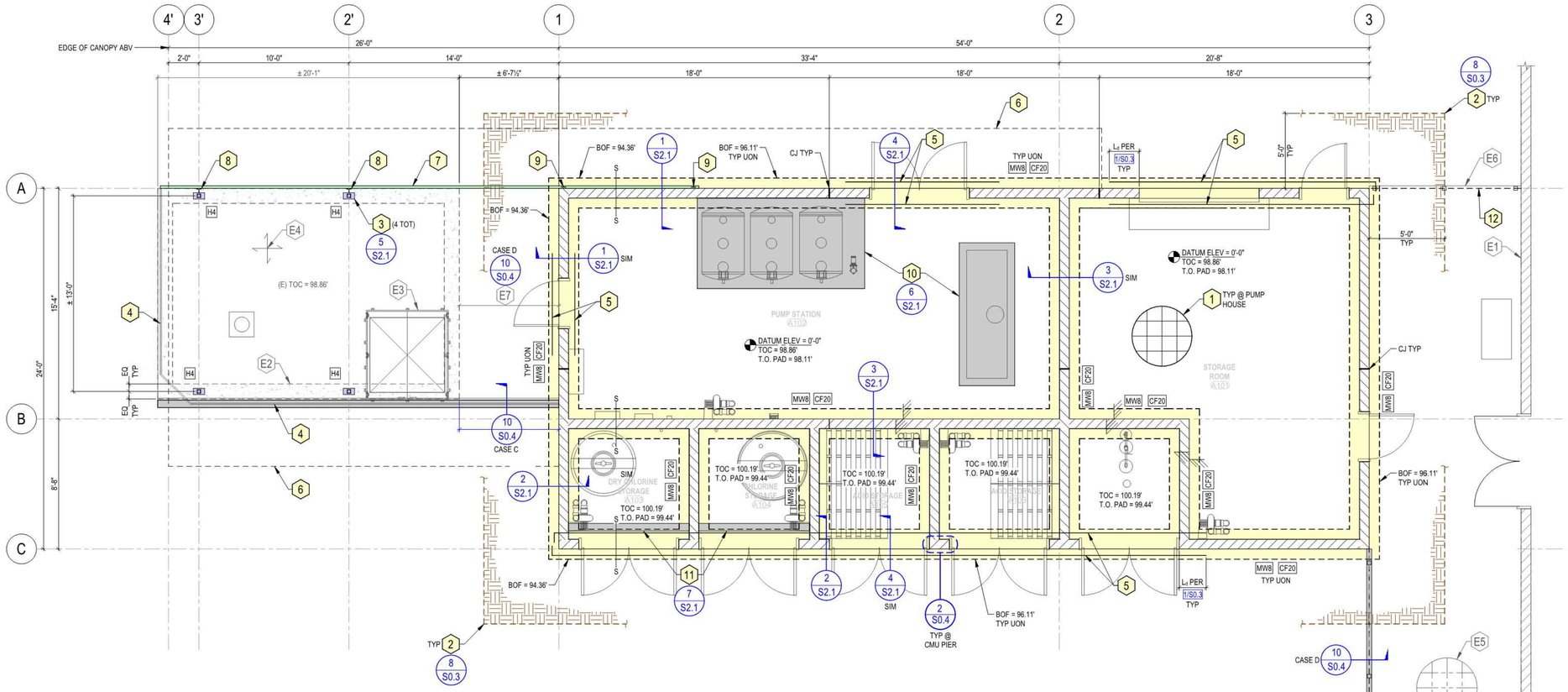

LEGEND

SYMBOL:	INDICATES:
P4	POST OR COL SIZE PER SCHED
F10	FOOTING TYPE PER SCHED
	FTG BELOW (LINE OF SAWCUT WHEN SOLID)
	FTG OR GRADE BM SIZE PER SCHED
CF20	FTG OR GRADE BM
S S	TOF ELEVATION CHANGE (STEP FTG) PER 10/S0.3
	ELEVATION CHANGE (STEP, S.A.D.)
	EXTENT OF (E) NWC WALL BELOW (SEE PLANS FOR LEVEL BELOW)
MW1	WALL TYPE PER MASONRY WALL SCHEDULE
	CMU WALL
	CONTROL JOINT PER 3/S0.4

PLAN NOTES:

1. GENERAL NOTES: S0.1 & S0.2
2. TYPICAL DETAILS: S0.3 THRU S0.5
3. FOR FRAMING ABOVE & ADDL INFO: 1/S1.2
4. VERIFY ALL DIMS & LOCATIONS w/ ARCH & EQUIP DWGS.
5. S.A.D. & EQUIP DWGS FOR ADDL INFO NOT SHOWN.
6. COORD OPNGS WITH ARCH DWGS.
7. S.A.D. FOR SLAB DEPRESSIONS, OPNGS, CURBS AND STEPS.
8. ALL ELEVS ARE RELATIVE TO ASSUMED DATUM ELEV AS SHOWN ON PLAN (S.A.D. AND/OR CIVIL DWGS FOR ACTUAL ELEVATIONS).

CITY OF SANTA CLARITA
BUILDING & SAFETY
APPROVED
Under SCMC Titles 18, 19, 20, 21, 24, 25
Sep 16, 2025
F. Svendsen
BLD25-00576 (ARCH)
The approved plans must be available at the construction site at all times. Changes or alterations to approved plans shall not be made without written permission from the City of Santa Clarita Building & Safety Division. The approval of these plans shall not be construed to permit or approve any violation of the applicable codes, ordinances, or other laws.

PLAN KEY NOTES

1. 5" THK NWC S.O.G. w/ #4 @ 12"oc EW (CTRD IN SLAB) o/ 20 MIL VAPOR RETARDER o/ GEOFABRIC MIRAFI 140N o/ 4" CRUSHED ROCK o/ COMPACTED SOIL (SEE GEOTECH REPORT FOR ADDL INFO).
2. LINE OF OVER-EXCAVATION (SEE GEOTECH REPORT FOR ADDL INFO).
3. BASE PL PER DET.
4. WROUGHT IRON FENCE o/ NWC CURB/WALL (S.A.D).
5. ADDL 2- #5 TOP REINF IN NWC CONT FTG.
6. CANOPY OVERHANG ABV PP ABV.
7. VERT DECK PLANKS (S.A.D. FOR ADDL INFO).
8. WT WELDED TO HSS COL FOR VERT DECK SUPPORT.
9. 4x NAILER FOR VERT DECK SUPPORT.
10. NWC EQUIP PAD PER DET (S.A.D./S.M.D. FOR ADDL INFO).
11. NWC CONTAINMENT CURB PER DET (S.A.D./S.M.D. FOR ADDL INFO).
12. WROUGHT IRON FENCE SEE F/C3.0 .
13. DOUBLE-DOOR GATE SEE C/C3.0 .

E1 (E) ADJ BLDG CMU WALL.
E2 (E) UNDERGROUND SURGE CHAMBER .
E3 (E) ACCESS HATCH OF SURGE TANK.
E4 (E) TWO-WAY SLAB OF SURGE TANK, REPAIR CONC PER 12/S0.3.
E5 (E) NWC S.O.G.
E6 EXTENT OF (E) S.O.G. (S.A.D.).
E7 (E) NWC S.O.G. TIE-IN AS REQD.

COLUMN SCHEDULE

MARK	COLUMN SIZE	BASE PL	A.A.
H4	HSS4x4x5/16	EMB PL PER DET	2- ½"Φ

FOOTING SCHEDULE

MARK	WIDTH 'B'	WIDTH 'D'	HEIGHT 'H'	REINFORCING
CF20	2'-0"	CONT	1'-6"	2- #5 CONT BOT

NOTE:
SEE DETAILS FOR DEFINITIONS OF WIDTHS ('B' x 'D') & HEIGHT ('H').

MASONRY WALL SCHEDULE

MARK	BLOCK SIZE	VERT REINF	HORIZ REINF
MW8	8x8x16	#5 @ 24"oc	#5 @ 32"oc

NOTES:
1. ALL WALLS SHALL BE SOLID GROUTED.
2. VERT REINF SHALL BE CENTERED IN WALL.

PROJECT NORTH

FOUNDATION PLAN (1)
SCALE: 1/4" = 1'-0"

REVIEWED BY: PM - DESIGN	09/30/2025	EXECUTION DATE
REVIEWED BY: PM - CONSTRUCTION	09/30/2025	EXECUTION DATE

IN ACCORDANCE WITH RESOLUTION No. 19-6, AS A RESOLUTION OF THE CITY COUNCIL OF THE CITY OF SANTA CLARITA DELEGATING DISCRETIONARY AUTHORITY TO THE DIRECTOR OF PUBLIC WORKS, DIRECTOR OF RECREATION AND COMMUNITY SERVICES, OR DIRECTOR OF PLANNING TO APPROVE CERTAIN PLANS AND DESIGNS, THE CITY COUNCIL DELEGATED TO THE DIRECTORS TO APPROVE PLANS AND DESIGNS FOR THE CONSTRUCTION OF IMPROVEMENTS TO PUBLIC PROPERTY FOR PURPOSES OF DESIGN IMMUNITY PURSUANT TO GOVERNMENT CODE SECTION 830.6. THE DIRECTOR MAY ALSO APPROVE THE PLAN, DESIGN, OR AMENDMENT OR MODIFICATION TO THE PLAN OR DESIGN, OR A CONSTRUCTION OF, OR AN IMPROVEMENT TO THE PUBLIC FACILITY, STRUCTURE, OR PROPERTY TO WHICH THIS STATEMENT, MY SIGNATURE AND DATE IS AFFIXED.

REGISTERED PROFESSIONAL ENGINEER
ALEXANDROS G. BLETSOS
No. 5659
STRUCTURAL
STATE OF CALIFORNIA
SIGNED 04.30.2025

SPIRE STRUCTURAL ENGINEERING
26461 Rancho Parkway South Lake Forest, CA 92630 949.916.3440
www.spirestructures.com
ENG: AGB
JOB#: 24PAC01

PREPARED BY
ALEXANDROS BLETSOS
PROJECT ENGINEER
R.S.E. NO: S5659
EXP: 06/30/2025

DRAWN BTM	SCALE AS SHOWN	DATE 02/17/2020
DESIGNED AGB		
CHECKED AGB		

TITLE DETAILS

C258
NEWHALL PARK POOL
PUMP ROOM RENOVATION
PLANS
SANTA CLARITA CA

SHEET S1.1
26 OF 61 SHEETS
JOB NO. C258

Docusign Envelope ID: F28B5F90-223C-42A7-9ED1-46868B54D361
Xrefs: C258 Titleblock.dwg
Dimscale = 1, LTscale = 1, PSltscale = 1, ACAD Ver. = 23.0s (LMS Tech), Viewtab = 1
B:\C258\Engineering\C258-04 S0.1 FOUNDATION PLAN.dwg - Tab: 26 - by pierdergrost on 09/29/25 at 2:24:09 PM

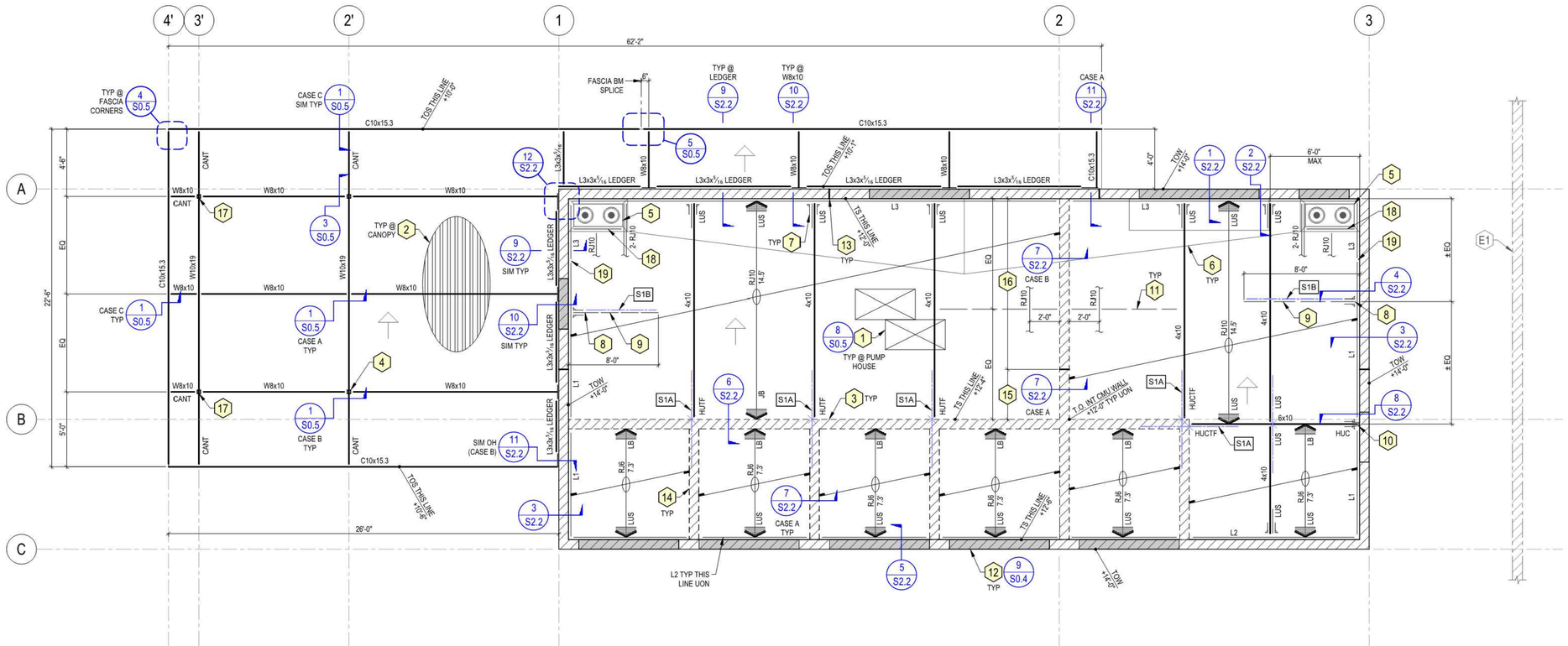

STEEL DECK SCHEDULE

SLAB TYPE	DECK TYPE	HEIGHT	GAGE	FACTORY VENTED	MINIMUM SECTION PROPERTIES			FILL		STUD SIZE	SLAB REINF	DECK ATTACHMENT				SIDE LAP ATTACHMENT	DIAPHRAGM CAPACITY (PLF, ASD)
								TYPE	MIN THK ABV TOP FLUTE			TO PERIMETER SUPPORT		TO INTERMEDIATE SUPPORT			
					I (IN⁴)	S+ (IN³)	S- (IN³)					PERPENDICULAR TO DECK	PARALLEL TO DECK	PERPENDICULAR TO DECK	PARALLEL TO DECK		
D1	VERCO PLB-36	1½"	22	NO	0.175	0.187	0.198	---	---	---	---	⅛"Φ PUDDLE WELD 36/4 PATTERN	⅛"Φ PUDDLE WELD @ 12"oc	⅛"Φ PUDDLE WELD 36/4 PATTERN	⅛"Φ PUDDLE WELD @ 12"oc	VSC2 @ 24"oc	515
D1A	VERCO PLB-36	1½"	22	NO	0.175	0.187	0.198	---	---	---	---	HILTI X-HSN24 FASTENERS 36/4 PATTERN	HILTI X-HSN24 FASTENERS @ 12"oc	HILTI X-HSN24 FASTENERS 36/4 PATTERN	HILTI X-HSN24 FASTENERS @ 12"oc	VSC2 @ 24"oc	480

NOTES:
1. ALL STL DECK SHALL CONFORM TO IAPMO REPORT NO. ER-0217.
2. WHENEVER POSSIBLE, DECK LAYOUTS SHALL PROVIDE SHEETS OF SUFFICIENT LENGTH TO SPAN CONTINUOUSLY ACROSS AT LEAST THREE SPANS. ENDS SHALL TERMINATE OVER A SUPPORT PERPENDICULAR TO THE DECK SPAN, EXCEPT AT OPNGS OR BUILDING EDGES WHERE DECKS MAY BE CANTILEVERED.
3. SHORE DECK AS REQD BY MFR.
4. PROVIDE A MINIMUM OF 2" BEARING AT SUPPORTING MEMBERS PERPENDICULAR TO DECK SPAN AND 1½" AT MEMBERS PARALLEL TO DECK SPAN.
5. DIAMETER OF PUDDLE WELD SHOWN REPRESENTS EFFECTIVE FUSION AREA.
6. EACH PUDDLE WELD SHOWN MAY BE REPLACED WITH A SHEAR STUD WELDED THROUGH DECK.
7. SLAB TYPES DESIGNATED WITH "A" ARE AN OPTION TO THE BASIC TYPE. FOR EXAMPLE, SLAB TYPE D1A' MAY BE USED IN LIEU OF 'D1'.
8. OTHER DECK TYPES & CONNECTIONS MAY BE SUBSTITUTED (PROVIDE CODE REPORT & CONNECTIONS TO MEET OR EXCEED THE CAPACITIES SHOWN).

LEDGER SCHEDULE

MARK	SIZE	AB SIZE	AB SPACING	SPLICE STRAP
L1	2x6	½"Φ w/ STD WASHER	32"oc	CS14 x 3'-0"
L2	2x6	½"Φ w/ STD WASHER	16"oc	CS14 x 3'-0"
L3	2x10	½"Φ w/ STD WASHER	16"oc (STAG)	CS14 x 3'-0"

NOTE:
SEE 10/S0.5 FOR SPLICE DETAIL.

JOIST SCHEDULE

MARK	SIZE	SPACING	HANGER UON	MAX SPAN
RJ6	2x6	24"oc	LUS/LB	7'-4"
RJ10	2x10	24"oc	LUS/JB	14'-6"

NOTE:
OMIT HGR @ BEARING LOCATIONS.

STRAP SIZE

MARK	SIZE	LENGTH @ MEMBER
S1	CMST12	3'-3"

NOTES:
1. FILL ALL HOLES w/ 10d UON.
2. SEE PLAN FOR STRAP LENGTH @ BLKG.
3. SEE DETAILS FOR ADDL INFO.

STRAP LOCATION

MARK	END 1	END 2
A	o/ SHTG o/ FRMG	o/ SHTG o/ NAILER
B	o/ SHTG o/ BLKG	o/ SHTG o/ BLKG

S1A
LOCATION MARK
STRAP TYPE MARK #

LEGEND

SYMBOL: INDICATES:

- LUS / RJ10 / 10.0": JOIST TYPE PER SCHED
- BEARING POINT
- CANTILEVER WHERE OCCURS
- JOIST SPAN DIR
- APPROX SPAN
- EXTENT OF JOIST TYP
- END CONN
- CMU WALL BELOW PP BELOW
- LEDGER WHERE OCCURS
- WALL ANCHOR WHERE OCCURS
- RJ
- SLOPE (S.A.D.)
- 4x4 BLKG (WHERE OCCURS)
- STRAP (SIZE, LENGTH, NAIL & LOCATION PER STRAP SCHED)
- CENTER OF STRAP

PLAN NOTES:

1. GENERAL NOTES: S0.1 & S0.2.
2. TYPICAL DETAILS: S0.3 THRU S0.5
3. VERIFY ALL DIMS & LOCATIONS w/ ARCH & EQUIP DWGS.
4. S.A.D. & EQUIP DWGS FOR ADDL INFO NOT SHOWN.
5. S.A.D. FOR FRMG ELEVATIONS.
6. S.A.D. FOR ROOF SLOPES.
7. SEE FDN PLAN NOTES FOR GENERAL INFO.
8. ADJUST LOCATION OF SMALL OPNGS TO FIT BTWN FRMG MEMBERS.
9. PROVIDE 2- #5 CHORD BARS IN THE BOND BM @ +12'-0" TYP.

ROOF LOADS:

ROOF DEAD LOAD: 15 PSF
ROOF LIVE LOAD: 20 PSF

CANOPY DEAD LOAD: 8 PSF
CANOPY LIVE LOAD: 20 PSF

CITY OF SANTA CLARITA
BUILDING & SAFETY
APPROVED
Under SCMC Titles 18, 19, 20, 21, 24, 25
Sep 16, 2025
F. Svendsen
BLD25-00576 (ARCH)
The approved plans must be available at the construction site for inspection. Any alterations, additions or changes shall not be made without written permission from the City of Santa Clarita Building & Safety Division. The approval of these plans shall not be construed to permit or approve any violation of the applicable codes, ordinances, or other laws.

PLAN KEY NOTES

1. ½" STRUC 1 SHTG w/ FACE GRAIN LAID PERP TO FRMG (BLOCKED, TYPE 4 DIAPHRAGM PER 6/S0.5).
2. 1½" x 22ga STL DECK.
3. 4x NAILER o/ CMU WALL PP BLW.
4. STL COL BLW PP BLW.
5. ROOF DRAIN (S.A.D.).
6. CRICKET (S.A.D.).
7. HDU4 WALL ANCHOR ES OF 4x RJ (PROVIDE SHIM AS REQD) PER DET.
8. 6x6 BLK w/ HDU4 WALL ANCHOR ES PER DET.
9. 4x6 BLKG @ STRAP (PROVIDE 2 LINES BN TO BLKG).
10. HUC HGR w/ TITEN TURBO SCREW ANCHORS PER DET.
11. 4x6 BLKG.
12. CMU LINTEL PER DET.
13. CJ PP BLW.
14. SLOPED 6x NAILER o/ CMU WALL PP BLW.
15. SLOPED 4x NAILER o/ CMU WALL PP BLW.
16. 3x NAILER o/ SLOPED CMU WALL.
17. PT BOLTS & FULL-DEPTH STIFF THIS CONN.
18. RJ10 BLK w/ LUS HGR EA END.
19. LEDGER SPLICE.

E1 (E) ADJ BLDG CMU WALL.

PROJECT NORTH

ROOF FRAMING PLAN (1)
SCALE: 1/4" = 1'-0"

REVIEWED BY:	09/30/2025
PM/DESIGNER	EXECUTION DATE
REVIEWED BY:	09/30/2025
PM-CONSTRUCTION	EXECUTION DATE

IN ACCORDANCE WITH RESOLUTION No. 19-6, AS A RESOLUTION OF THE CITY COUNCIL OF THE CITY OF SANTA CLARITA DELEGATING DISCRETIONARY AUTHORITY TO THE DIRECTOR OF PUBLIC WORKS, DIRECTOR OF RECREATION AND COMMUNITY SERVICES, OR DESIGNEE, TO APPROVE PLANS AND DESIGNS FOR PUBLIC PROJECTS, CITY OFFICERS TO APPROVE PLANS AND DESIGNS FOR THE CONSTRUCTION OF IMPROVEMENTS TO PUBLIC PROPERTY FOR PURPOSES OF DESIGN IMMUNITY PURSUANT TO GOVERNMENT CODE SECTION 830.6. THE CITY OFFICER OR DESIGNEE HAS DETERMINED THAT THE DISCRETION DELEGATED TO THE CITY OFFICER OR DESIGNEE TO APPROVE THE PLAN OR AMENDMENT OR MODIFICATION TO THE PLAN OR DESIGN, OR A CONSTRUCTION OF, OR AN IMPROVEMENT TO THE PUBLIC FACILITY, STRUCTURE, OR PROPERTY TO WHICH THIS STATEMENT, MY SIGNATURE AND DATE IS AFFIXED.

REGISTERED PROFESSIONAL ENGINEER
ALEXANDROS G. BLETSOS
No. 5659
STRUCTURAL
STATE OF CALIFORNIA
Alexandros Bletsos
SIGNED 04.30.2025

SPIRE STRUCTURAL ENGINEERING
26401 Rancho Parkway South Lake Forest, CA 92630
www.spirestructures.com
ENG: AGB
JOB#: 24PAC01

PREPARED BY
ALEXANDROS BLETSOS
PROJECT ENGINEER
R.S.E. NO: S5659
EXP.: 06/30/2025

DRAWN	SCALE
BTM	AS SHOWN
DESIGNED	
AGB	
CHECKED	DATE
AGB	02/17/2020

TITLE DETAILS

C258 NEWHALL PARK POOL
PUMP ROOM RENOVATION
PLANS
SANTA CLARITA CA

SHEET S1.2
27 OF 61 SHEETS
JOB NO. C258

Sep. 29, 2025
Docusign Envelope ID: F28B5F90-223C-42A7-9ED1-4686B8542361
Xrefs: C258 Titleblock.dwg
Dimscale = 1; LTscale = 1; PSltscale = 1; ACAD Ver. = 23.0s (LMS Tech); Visretain = 1
R:\C258\Engineering\C258-04 (10X36 D)\sheets\C258-04 S1.2 ROOF FRAMING PLAN.dwg - Tab: 27 - by jamberguest on 09/29/25 at 2:24:13 PM

Sep. 29, 2025

CITY OF SANTA CLARITA
BUILDING & SAFETY
APPROVED
Under SCMC Titles 18, 19, 20, 21, 24, 25
Sep 16, 2025
F. Svendsen
BLD25-00576 (ARCH)
The approved plans must be available at the construction site at all times. Changes or alterations to approved plans shall not be made without written permission from the City of Santa Clarita Building & Safety Division. The approval of these plans shall not be construed to permit or approve any violation of the applicable codes, ordinances, or other laws.

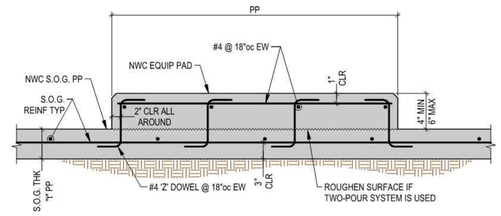

NOTE:
S.A.D./S.M.D. FOR LOCATIONS, HEIGHT AND DIMENSIONS UON ON PLAN.

TYPICAL CONCRETE PAD @ S.O.G. (6)
SCALE: NONE

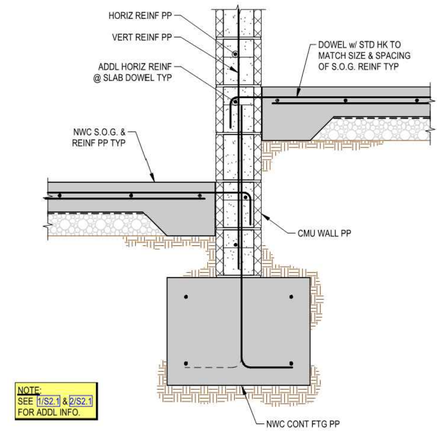

NOTE:
SEE 1/S2.1 & 2/S2.1 FOR ADDL INFO.

INTERIOR CMU WALL SECTION (3)
SCALE: NONE

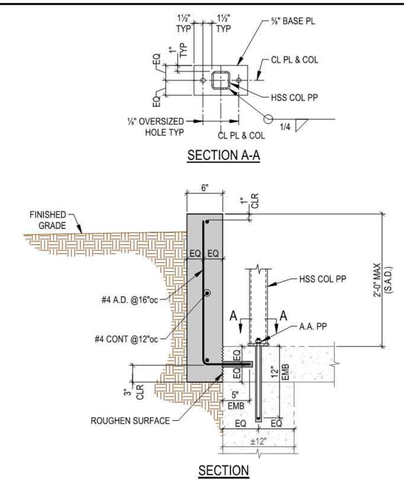

CANOPY COLUMN BASE CONN & NWC RETAINING WALL (5)
SCALE: NONE

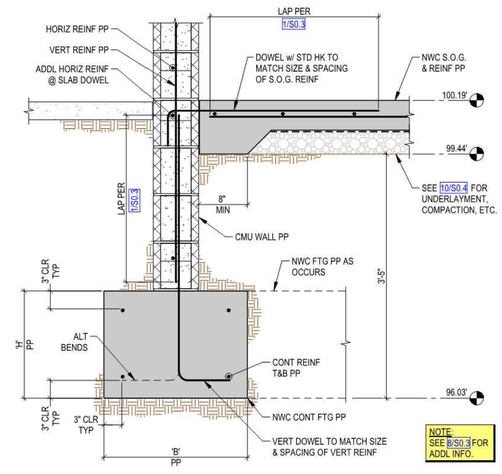

NOTE:
SEE 8/S0.3 FOR ADDL INFO.

EXTERIOR CMU WALL SECTION (2)
SCALE: NONE

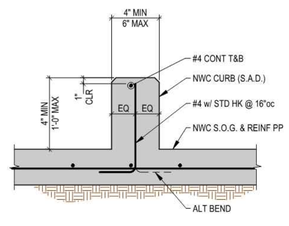

NOTE:
S.A.D./S.M.D. FOR LOCATIONS, HEIGHT AND DIMENSIONS UON ON PLAN.

TYPICAL CURB @ S.O.G. (7)
SCALE: NONE

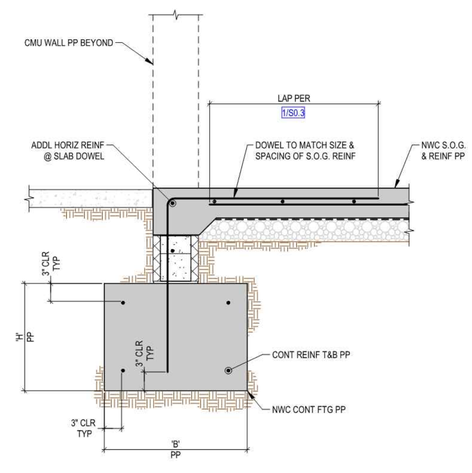

OPENING @ EXTERIOR CMU WALL SECTION (4)
SCALE: NONE

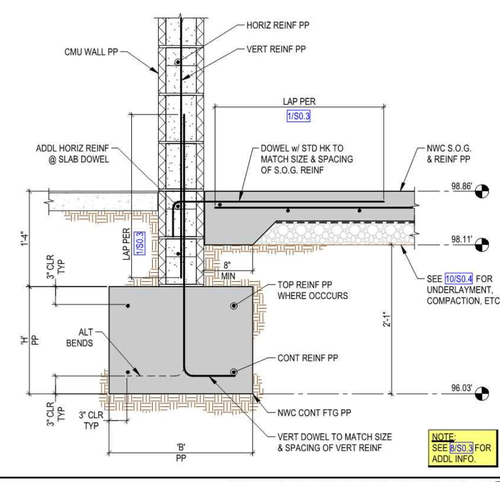

NOTE:
SEE 8/S0.3 FOR ADDL INFO.

EXTERIOR CMU WALL SECTION (1)
SCALE: NONE

REVIEWED BY:	09/30/2025
PM/DESIGNER	EXECUTION DATE
REVIEWED BY:	09/30/2025
PM - CONSTRUCTION	EXECUTION DATE

IN ACCORDANCE WITH RESOLUTION No. 19-6, AS A RESOLUTION OF THE CITY COUNCIL OF THE CITY OF SANTA CLARITA DELEGATING DISCRETIONARY AUTHORITY TO THE DIRECTOR OF PUBLIC WORKS, DIRECTOR OF RECREATION AND COMMUNITY SERVICES, AND CITY ENGINEER TO APPROVE PLANS AND DESIGNS FOR THE CONSTRUCTION OF IMPROVEMENTS TO PUBLIC PROPERTY FOR PURPOSES OF DESIGN IMMUNITY PURSUANT TO GOVERNMENT CODE SECTION 830.6 AND TO SAVE THE CITY HARMLESS, THE DIRECTOR OF PUBLIC WORKS OR DESIGNEE DELEGATED TO HIS OR HER PLAN, DESIGN, OR AMENDMENT OR MODIFICATION TO THE PLAN OR DESIGN, OR A CONSTRUCTION OF, OR AN IMPROVEMENT TO THE PUBLIC FACILITY, STRUCTURE, OR PROPERTY TO WHICH THIS STATEMENT, MY SIGNATURE AND DATE IS AFFIXED.

REGISTERED PROFESSIONAL ENGINEER
ALEXANDROS G. BLETSOS
No. 5659
STRUCTURAL
STATE OF CALIFORNIA
SIGNED 04.30.2025

SPIRE STRUCTURAL ENGINEERING
26461 Rancho Parkway South Lake Forest, CA 92630
949.916.3440
www.spirestructures.com
ENG: AGB
JOB#: 24PAC01

PREPARED BY
ALEXANDROS BLETSOS
PROJECT ENGINEER
R.S.E. NO: S5659
EXP: 06/30/2025

DRAWN	SCALE
BTM	AS SHOWN
DESIGNED	DATE
AGB	02/17/2020
CHECKED	
AGB	

TITLE DETAILS

C258 NEWHALL PARK POOL
PUMP ROOM RENOVATION
PLANS
SANTA CLARITA CA

SHEET S2.1
28 OF 61 SHEETS
JOB NO. C258

Docusign Envelope ID: F28B5F90-223C-42A7-9ED1-4868B8540361
Xrefs: C258 Titleblock.dwg
Dimscale = 1, LTscale = 1, PSltscale = 1, ACAD Ver. = 23.0s (LMS Tech), Viewtab = 1
B:\C258\Engineering\C258-04 (100% CD)\sheets\C258-04 S2.1 DETAILS.dwg - Tab: 28 - by jpendergrast on 09/29/25 at 2:25:23 PM

Sep. 29, 2025

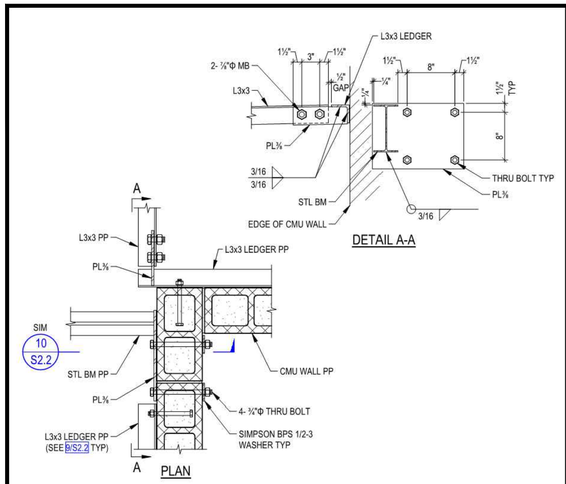

CANOPY FRAMING SUPPORT AT CORNER (12)
SCALE: NONE

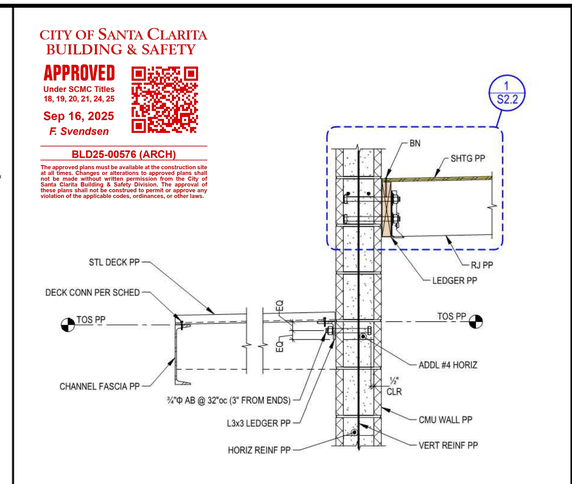

CANOPY LEDGER CONNECTION (9)
SCALE: NONE

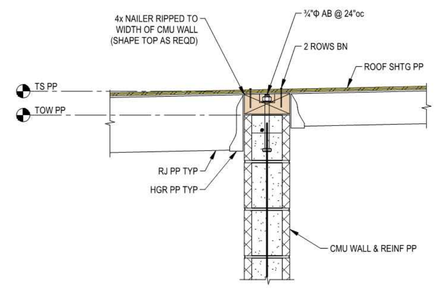

ROOF FRAMING AT INTERIOR CMU WALL CONNECTION (6)
SCALE: NONE

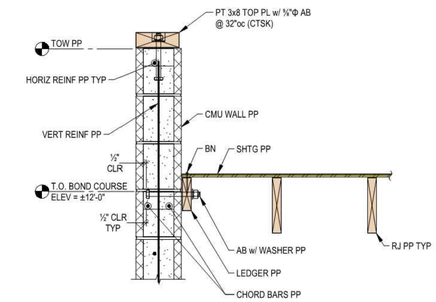

TYPICAL LEDGER CONNECTION @ FRAMING PARALLEL TO WALL (3)
SCALE: NONE

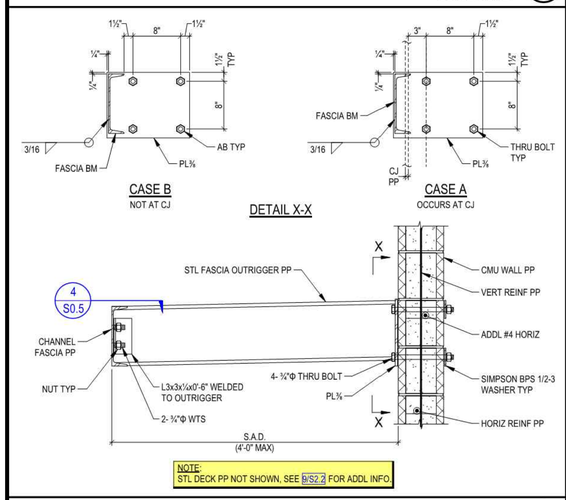

CANOPY FRAMING SUPPORT (CHANNEL FASCIA) (11)
SCALE: NONE

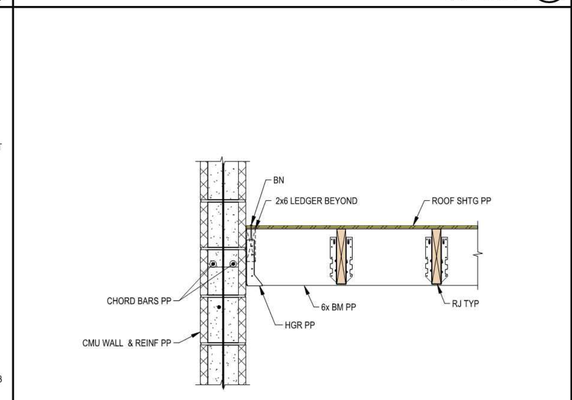

6x BEAM TO CMU WALL CONNECTION (8)
SCALE: NONE

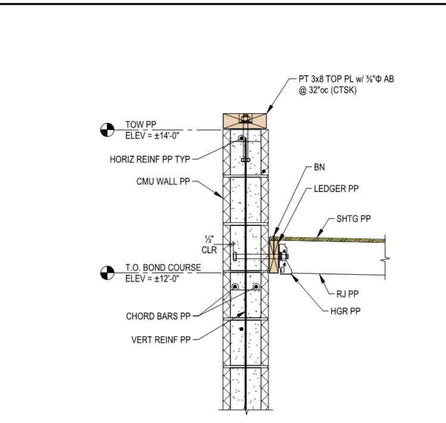

TYPICAL ROOF JOIST TO LEDGER CONNECTION (5)
SCALE: NONE

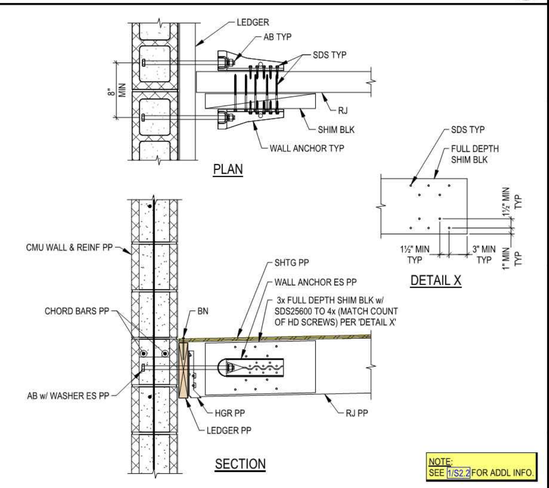

TYPICAL WALL ANCHOR TO ROOF JOIST CONNECTION (2)
SCALE: NONE

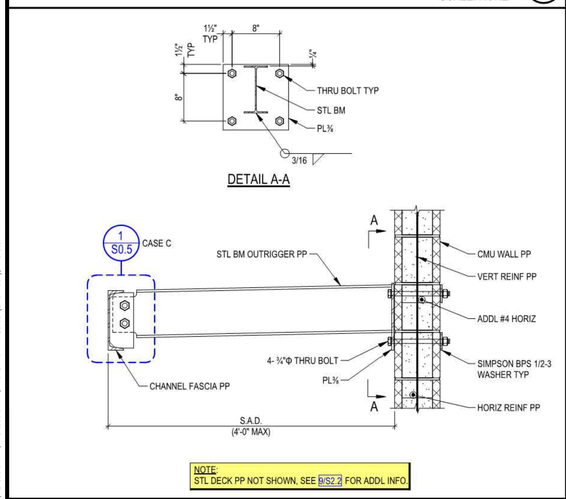

CANOPY FRAMING SUPPORT (STEEL BEAM) (10)
SCALE: NONE

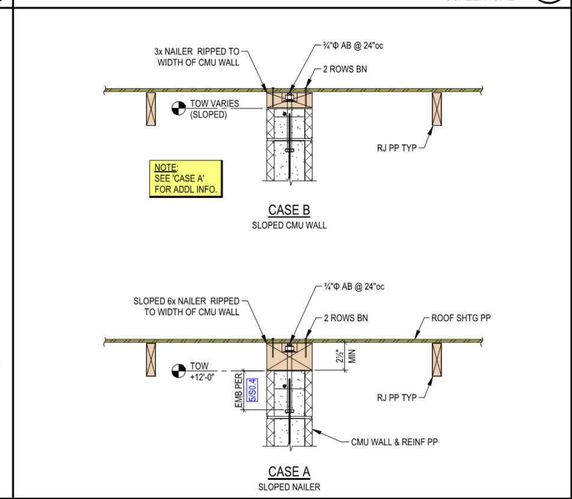

ROOF FRAMING AT INTERIOR CMU WALL CONNECTION (7)
SCALE: NONE

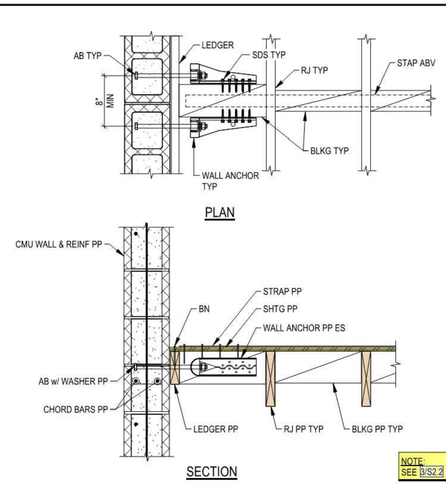

TYPICAL WALL ANCHOR TO BLOCKING CONNECTION (4)
SCALE: NONE

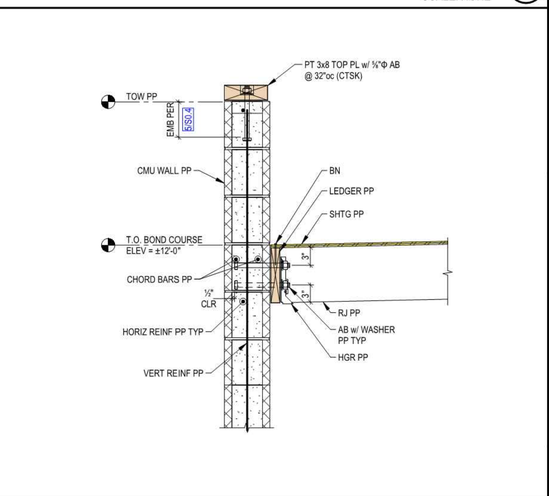

TYPICAL ROOF JOIST TO LEDGER CONNECTION (1)
SCALE: NONE

REVIEWED BY:	09/30/2025
PM/DESIGNER	EXECUTION DATE
REVIEWED BY:	09/30/2025
PM - CONSTRUCTION	EXECUTION DATE

IN ACCORDANCE WITH RESOLUTION No. 19-6, AS A RESOLUTION OF THE CITY COUNCIL OF THE CITY OF SANTA CLARITA DELEGATING DISCRETIONARY AUTHORITY TO THE DIRECTOR OF PUBLIC WORKS, DIRECTOR OF RECREATION AND COMMUNITY SERVICES, AND DIRECTOR OF ADMINISTRATIVE SERVICES TO APPROVE CERTAIN CONTRACTS, TO APPROVE PLANS AND DESIGNS FOR THE CONSTRUCTION OF IMPROVEMENTS TO PUBLIC PROPERTY FOR PURPOSES OF DESIGN IMMUNITY PURSUANT TO GOVERNMENT CODE SECTION 830.6, TO ADOPT CERTAIN CONSTRUCTION DOCUMENTS, TO SAVE THE CITY HARMLESS, AND TO DELEGATE TO THE CITY ENGINEER THE AUTHORITY TO APPROVE MODIFICATION TO THE PLAN OR DESIGN, OR A CONSTRUCTION OF, OR AN IMPROVEMENT TO THE PUBLIC FACILITY, STRUCTURE, OR PROPERTY TO WHICH THIS STATEMENT, WITH SIGNATURE AND DATE IS AFFIXED.

REGISTERED PROFESSIONAL ENGINEER
ALEXANDROS G. BLETSOS
No. 5659
STRUCTURAL
STATE OF CALIFORNIA
SIGNED 04.30.2025

SPIRE STRUCTURAL ENGINEERING
26461 Rancho Parkway South Lake Forest, CA 92630
949.916.3440
www.spirestructures.com
ENG: AGB
JOB#: 24PAC01

PREPARED BY
ALEXANDROS BLETSOS
PROJECT ENGINEER
R.S.E. NO. 5659
EXP. 09/30/2025

SCALE	DATE
AS SHOWN	02/17/2020
DRAWN BTM	DESIGNED AGB
CHECKED AGB	

TITLE DETAILS

C258
NEWHALL PARK POOL
PUMP ROOM RENOVATION
PLANS
SANTA CLARITA CA

SHEET S2.2
29 OF 61 SHEETS
JOB NO. C258

R:\C258\Engineering\C258-04 (1028 CD)\Sheets\C258-04 S2.2 DETAILS.dwg - Tab: 29 - by jenniergrost on 09/29/25 at 1:32:59 PM

Docusign Envelope ID: F28B5F90-223C-42A7-9ED1-46B6B54D361
Xrefs: C258 Titleblock.dwg
Dimscale = 1, LTscale = 1, PSltscale = 1, ACAD Ver. = 23.0s (LMS Tech), Visretain = 1

Sep. 29, 2025

EXISTING EQUIPMENT LIST

CONTRACTOR TO EXAMINE CONDITION AND REUSE ON SITE

NO	ITEM	MODEL	MFG/SUPPLIER	DESCRIPTION	QTY
1	FILTER	CARBON STEEL FILTER	EPD USA INC	CARBON STEEL POLYETHYLENE LINED STEEL FILTER, THREE LINE ASSEMBLE, SIZE 13.5 SF. RATED FOR 600 GPM AND 40.5SF. FILTER TO BE PROTECTED AND REUSED, EXISTING SAND TO BE REPLACED WITH NEW SAND.	1
2	6" BASKET STRAINER	EXISTING	EXISTING	6" IN-LINE BASKET STRAINER TO BE PROTECTED AND REUSED	2
3	500 GAL CHLORINE TANK	TC5971DC	CHEMTAINER	CHLORINE TANK PER CHEMTAINER DOUBLE WALL TANK MODEL TC5971DC, RATED 500 GAL. CHLORINE TANK TO BE PROTECTED AND REUSED. CONTRACTOR TO PROVIDE SEISMIC RESTRAINTS AND CALCULATIONS.	1
4	350 GAL ACID TANK	TC5256DC	CHEMTAINER	ACID TANK PER CHEMTAINER DOUBLE WALL TANK MODEL TC5256DC, RATED 350 GAL. ACID TANK TO BE PROTECTED AND REUSED. CONTRACTOR TO PROVIDE SEISMIC RESTRAINTS AND CALCULATIONS.	1
5	EYE WASH STATION	EXISTING	EXISTING	EYEWASH STATION TO BE PROTECTED AND REUSED PER DETAIL B ON SHEET W242	1
6A	CHLORINE CHEMICAL DOSING PUMP	85M5	STENNER	CHEMICAL DOSING PUMP PER "STENNER" MODEL 85M5 RATED 25PSI. DOSING PUMP TO BE PROTECTED AND REUSED.	1
6B	CHLORINE CHEMICAL DOSING PUMP	45M5	STENNER	CHEMICAL DOSING PUMP PER "STENNER" MODEL 45M5 RATED 25PSI. DOSING PUMP TO BE PROTECTED AND REUSED.	1
7	ACID CHEMICAL DOSING PUMP	45M5	STENNER	CHEMICAL DOSING PUMP PER "STENNER" MODEL 45M5 RATED 25PSI. DOSING PUMP TO BE PROTECTED AND REUSED.	1
8	HEATER	HIGH DELTA 2002C	RAYPAK	POOL HEATER PER "RAYPAK" HIGH DELTA MODEL 2002C RATED FOR 1999 MBTU TO BE PROTECTED AND REUSED.	1
9	PRESSURE SUSTAINING PUMP	STA-RITE PL SERIES	PENTAIR	PRESSURE SUSTAINING PUMP PER PENTAIR STA-RITE PL SERIES PUMP MODEL PLBC-178L, RATED 1/2 HP, 60HZ TO BE PROTECTED AND REUSED.	1

NEW EQUIPMENT LIST

NO	ITEM	MODEL	MFG/SUPPLIER	DESCRIPTION	QTY
10	VERTICAL TURBINE PUMP	VIT-DITM 11CLC	GOULDS	VERTICAL TURBINE PUMP PER "GOULDS" VIT-SHORT SET LINESHAFT TURBINE PUMP, MODEL NUMBER VIT-DITM 11CLC, RATED 600 GPM @ 59' TDH, 15 HP, 1770 RPM, 208/120 V 3-phase, 4Ø, 60 HZ, VFD CONTROLLED, NSF 50 RATED, INVERTER DUTY MOTOR	1
11	ACCESS HATCH	H60601701	EJ	60"X60" ALUMINUM ACCESS HATCH ASSEMBLY, CHANNEL FRAME WITH LIFT ASSIST, BY EJ, PRODUCT NUMBER H60601701	1
12	CHEMICAL CONTROLLER	BECSYS7	BECS TECHNOLOGY	CHEMICAL CONTROLLER PER "BECS" MODEL BECSYS7	1
13	FLOW METER	SIGNET P51530	GF	FLOW METER PER "GF" SIGNET SERIES MODEL P51530,	1
14	FLOW TRANSMITTER	SIGNET 9900	GF	FLOW TRANSMITTER PER "GF" SIGNET SERIES MODEL 9900	1
15	EYEWASH HOSE	G5010	GUARDIAN	EYEWASH HOSE PER "GUARDIAN" MODEL G5010, RATED 300PSI, 3/8" NPT MALE SWIVEL INLET	2
16	LARGE EXHAUST FAN	P15SS2P050	PLASTEC	EXHAUST FAN PER "PLASTEC" MODEL P15SS2P050 RATED SINGLE PHASE, 0.5 HP, 3370 RPM, DESIGN FLOW 550 CFM	2
17	SMALL EXHAUST FAN	P15SS6P025	PLASTEC	EXHAUST FAN PER "PLASTEC" MODEL P15SS6P025 RATED SINGLE PHASE, 0.25 HP, 1120 RPM, DESIGN FLOW 100 CFM	6
18	PRESSURE GAUGE	PT45A1A*P17-G-P-MPPA	REOTEMP	PRESSURE GAUGE PER "REOTEMP" MODEL PART #: PT45A1A*P17-G-P-MPPA, PT45A1: 4.5" PROCESS GAUGE, THERMOPLASTIC CASE, SS WETTED, A*: BOTTOM CONNECTION TO DIAPHRAGM SEAL, P17: PRESSURE RANGE 0 – 60 PSI, G: GLYCERIN CASE FILL, P: PLASTIC LENS, MP: MIN/MAX POINTER	1
19	PRESSURE TRANSDUCER	TA1P171A-M00-*-MC-PB	REOTEMP	PRESSURE TRANSDUCER PER "REOTEMP" MODEL PART #: TA1P171A-M00-*-MC-PB, TA1: INDUSTRIAL TRANSMITTER, P17: RANGE: 0/60 PSI, 1: ACCURACY: +/-0.5% @77F (BSL), A: OUTPUT SIGNAL: 4-20 MA (2-WIRE, STD. / 3-WIRE TDS MODELS), M00: ELEC. CONNECTION – M12X1 (4-PIN), *: PROCESS CONNECTION – CONNECTION TO DIAPHRAGM SEAL, MC: OPTION – M12X1 FEMALE CONNECTOR – FIELD WIREABLE	1
20	LEVEL SENSOR	3-F	WARRICK	LIEVEL SENSOR PER "WARRICK" SERIES 3F, 3" PVC STRUCTURE WELL, 3 PROBE ASSEMBLY.	1
21	DOOR LOUVERS	DAYTON 5NKN0	GRAINGER	ALUMINUM 12"H X 24"W DOOR LOUVER PER "GRAINGER" PART NUMBER 5NKN0 RATED FOR 1.1 SQ. FT FREE AREA	12

CITY OF SANTA CLARITA
BUILDING & SAFETY
APPROVED
Under SCMC Titles 18, 19, 20, 21, 24, 25
Sep 16, 2025
F. Svendsen
BLD25-00576 (ARCH)
The approved plans must be available at the construction site at all times. Changes or alterations to approved plans shall not be made without written permission from the City of Santa Clarita. Approval of these plans does not mean that these plans shall not be construed to permit or approve any violation of the applicable codes, ordinances, or other laws.

PACE
Advanced Water Engineering
17520 Newhope Street, Suite 200 | Fountain Valley, CA 92708
P: (714) 481-7300 | www.pacewater.com

REVIEWED BY:		
Luis Trujillo	PM-DESIGN	09/30/2025 EXECUTION DATE
REVIEWED BY:	PM-CONSTRUCTION	09/30/2025 EXECUTION DATE

IN ACCORDANCE WITH RESOLUTION No. 19-6, AS A RESOLUTION OF THE CITY COUNCIL OF THE CITY OF SANTA CLARITA DELEGATING DISCRETIONARY AUTHORITY TO THE DIRECTOR OF PUBLIC WORKS, DIRECTOR OF RECREATION AND COMMUNITY SERVICES, DIRECTOR OF PUBLIC WORKS SERVICES, CITY ENGINEER, AND ASSISTANT CITY ENGINEERS TO APPROVE PLANS AND DESIGNS FOR THE CONSTRUCTION OF OR IMPROVEMENTS TO PUBLIC PROPERTY FOR PURPOSES OF DESIGN IMMUNITY PURSUANT TO GOVERNMENT CODE SECTION 830.6 FOR THE CITY OF SANTA CLARITA, I DO HEREBY EXERCISE THE DISCRETION VESTED UNTO ME BY THE CITY COUNCIL TO HAVE AUTHORITY TO PLAN, APPROVE OR MODIFICATION TO THE PLAN OR DESIGN, OR A CONSTRUCTION OF, OR AN IMPROVEMENT TO THE PUBLIC FACILITY, STRUCTURE, OR PROPERTY TO WHICH THIS STATEMENT, MY SIGNATURE AND DATE IS AFFIXED.

100% CD FOR REVIEW
REGISTERED ARCHITECT
ZIRANO SONG
No. 6945
Exp. DEC. 31, 2025
STATE OF CALIFORNIA

PREPARED BY
ZIRANO SONG
R.C.E. NO. # 69515
EXP: 08/30/2026

DRAWN	SCALE	DATE
J.P		03/2025
DESIGNED		
J.P		
CHECKED		
Z.S		

TITLE
EQUIPMENT LIST

C258
NEWHALL PARK POOL
PUMP ROOM RENOVATION
PLANS (100% CD)
SANTA CLARITA CA

SHEET
M1.0
30 OF 61 SHEETS

JOB NO. C258

c:\C258\engineering\c258-04 (100% cd)\sheets\C258-04 M1.0 EQUIPMENT LIST.dwg – Tab: 30 – by jpendergrost on 09/29/25 at 4:22:50 PM

Docusign Envelope ID: F28B5F90-223C-42A7-9ED1-4886B8540361

Xrefs: C258 Titleblock.dwg
Dimscale = 1, LTscale = 1, PSltscale = 1, ACAD Ver. = 23.0s (LMS Tech), Visretain = 1

Sep. 29, 2025

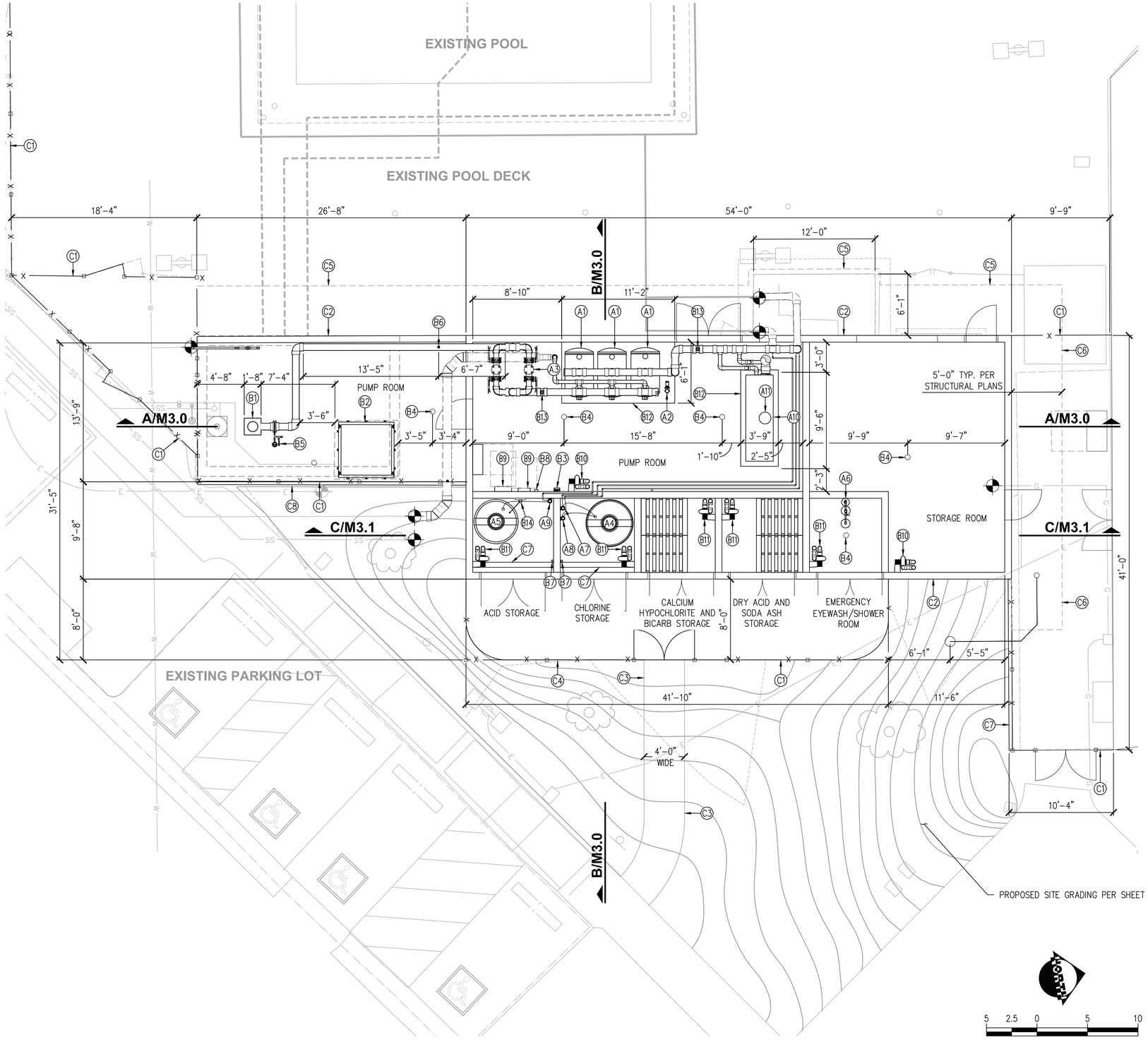

SITE PLAN

SCALE: 1"=5'-0"

CONSTRUCTION NOTES

PUMP STATION EQUIPMENT TO BE PROTECTED AND REUSED

- (A1) INSTALL POOL FILTER PER EQ. LIST #1 ON SHEET M1.0
- (A2) INSTALL PRESSURE SUSTAINING PUMP PER EQ LIST #9 ON SHEET M1.0
- (A3) INSTALL BASKET STRAINER PER EQ. LIST #2 ON SHEET M1.0
- (A4) INSTALL 500 GAL CHLORINE TANK PER EQ. LIST #3 ON SHEET M1.0
- (A5) INSTALL 350 GAL ACID TANK PER EQ. LIST #4 ON SHEET M1.0
- (A6) INSTALL EYE WASH STATION PER EQ. LIST #5 ON SHEET M1.0
- (A7) INSTALL CHLORINE CHEMICAL DOSING PUMP PER EQ. LIST #6.A ON SHEET M1.0
- (A8) INSTALL CHLORINE CHEMICAL DOSING PUMP PER EQ. LIST #6.B ON SHEET M1.0
- (A9) INSTALL ACID CHEMICAL DOSING PUMP PER EQ. LIST #7 ON SHEET M1.0
- (A10) INSTALL POOL HEATER PER EQ. LIST #8 ON SHEET M1.0
- (A11) INSTALL POOL HEATER VENTILATION PER DETAIL B SHEET M4.3

PUMP STATION NEW EQUIPMENT

- (B1) INSTALL VERTICAL TURBINE PUMP PER EQ. LIST #10 ON SHEET M1.0
- (B2) INSTALL 60" x 60" ALUMINUM ACCESS HATCH PER EQ. LIST #11 ON SHEET M1.0
- (B3) INSTALL CHEMICAL CONTROLLER PER EQ. LIST #12 ON SHEET M1.0
- (B4) INSTALL NEW 3" AREA DRAIN PER ZURN MODEL Z1730
- (B5) INSTALL NEW PRESSURE GUAGE AND TRANSDUCER PER DETAIL F SHEET M4.3
- (B6) INSTALL NEW FLOW METER PER EQ LIST #13 ON SHEET M1.0
- (B7) INSTALL NEW EYEWASH HOSE PER EQ LIST #15 ON SHEET M1.0
- (B8) INSTALL NEW WALL MOUNTED FLOW TRANSMITTER PER EQ LIST #14 ON SHEET M1.0
- (B9) INSTALL NEW ELECTRICAL PANEL PER ELECTRICAL SHEETS
- (B10) INSTALL NEW LARGE EXHAUST FAN PER EQ LIST #16 ON SHEET M1.0
- (B11) INSTALL NEW SMALL EXHAUST FAN PER EQ LIST #17 ON SHEET M1.0
- (B12) INSTALL NEW HOUSEKEEPING PAD PER DETAIL 6 SHEET S2.1
- (B13) INSTALL NEW AIR RELIEF VALVE PER DETAIL D SHEET M4.1
- (B14) INSTALL NEW CHEMICAL FUME SCRUBBER PER DETAIL B SHEET M4.1

NEW LANDSCAPE FEATURES

- (C1) INSTALL NEW WROUGHT-IRON FENCE PER DETAIL B SHEET C3.0
- (C2) INSTALL NEW BUILDING PER ARCHITECTURAL AND STRUCTURAL PLANS
- (C3) INSTALL NEW CONCRETE ACCESS WALKWAY PER DETAIL 10 SHEET S.04
- (C4) INSTALL NEW CONCRETE ENTRY PAD PER DETAIL 10 SHEET S.04
- (C5) INSTALL NEW POOL DECK TO TIE INTO EXISTING POOL DECK PER DETAIL 12 SHEET S0.4
- (C6) INSTALL NEW CONCRETE SLAB TO TIE INTO EXISTING CONCRETE SLAB PER DETAIL 12 SHEET S0.4
- (C7) INSTALL NEW 6" CONSTRUCTION CURB PER DETAIL 7 SHEET S2.1
- (C8) INSTALL NEW CONTAINMENT WALL PER DETAIL 5 SHEET S2.1

CITY OF SANTA CLARITA
BUILDING & SAFETY
APPROVED
Under SCMC Titles 18, 19, 20, 21, 24, 25
Sep 16, 2025
F. Svendsen
BLD25-00576 (ARCH)
The approved plans must be available at the construction site at all times. Changes or alterations to approved plans shall not be made without written permission from the City of Santa Clarita Building & Safety Division. The approval of these plans shall not be construed to permit, authorize, or approve violation of the applicable codes, ordinances, or other laws.

PACE
Advanced Water Engineering
17520 Newhope Street, Suite 200 | Fountain Valley, CA 92708
P: (714) 481-7300 | www.pacewater.com

REVIEWED BY:	09/30/2025
PAC-DESIGN	EXECUTION DATE
REVIEWED BY:	09/30/2025
PAC-CONSTRUCTION	EXECUTION DATE

IN ACCORDANCE WITH RESOLUTION No. 19-6, AS A RESOLUTION OF THE CITY COUNCIL OF THE CITY OF SANTA CLARITA DELEGATING DISCRETIONARY AUTHORITY TO THE DIRECTOR OF PUBLIC WORKS, DIRECTOR OF RECREATION AND COMMUNITY SERVICES, DIRECTOR OF REDEVELOPMENT AND ASSISTANT CITY ENGINEER, OR CITY ENGINEER TO APPROVE PLANS AND DESIGNS FOR THE CONSTRUCTION OF OR IMPROVEMENTS TO PUBLIC PROPERTY FOR PURPOSES OF DESIGN IMMUNITY PURSUANT TO GOVERNMENT CODE SECTION 830.6 FOR THE CITY OF SANTA CLARITA, I DO HEREBY EXERCISE THE DISCRETION DELEGATED TO ME AND APPROVE THE PLAN OR DESIGN, OR AMENDMENT OR MODIFICATION TO THE PLAN OR DESIGN, OR A CONSTRUCTION, OF, OR AN IMPROVEMENT TO THE PUBLIC FACILITY, STRUCTURE, OR PROPERTY TO WHICH THIS STATEMENT, MY SIGNATURE AND DATE IS AFFIXED.

100% CD FOR REVIEW

LICENSED ARCHITECT — ZIRANG SONG — No. 6395 — Exp. DEC.31, 2025 — STATE OF CALIFORNIA

PREPARED BY
ZIRANG SONG
PROJECT ENGINEER
R.C.E. NO. # 69315
EXP: 06/30/2026

DRAWN	SCALE	DATE
J.P		03/2025
DESIGNED J.P		
CHECKED Z.S		

TITLE
EQUIPMENT LAYOUT PLAN

C258
NEWHALL PARK POOL
PUMP ROOM RENOVATION PLANS (100% CD)
SANTA CLARITA CA

SHEET
M2.0
31 OF 61 SHEETS

JOB NO. C258

Docusign Envelope ID: F29B5F90-223C-42A7-9ED1-46869B54D361
Xrefs: C258 Titleblock.dwg; Mechanical Layout.dwg; C258 Survey Basefile.dwg; Piping Layout.dwg; Grading Plan.dwg; Existing Utilities.dwg; C258 Survey Baseflle civil 3d.dwg
Dimscale = 1; LTscale = 1; PSltscale = 1; ACAD Ver. = 23.0s (LMS Tech); Viewtan = 1
C:\C258\engineering\c258-04 M2.0 EQUIPMENT LAYOUT PLAN.dwg – Tab: 31 – by jonderghost on 09/29/25 at 4:22:45 PM

Sep. 29, 2025

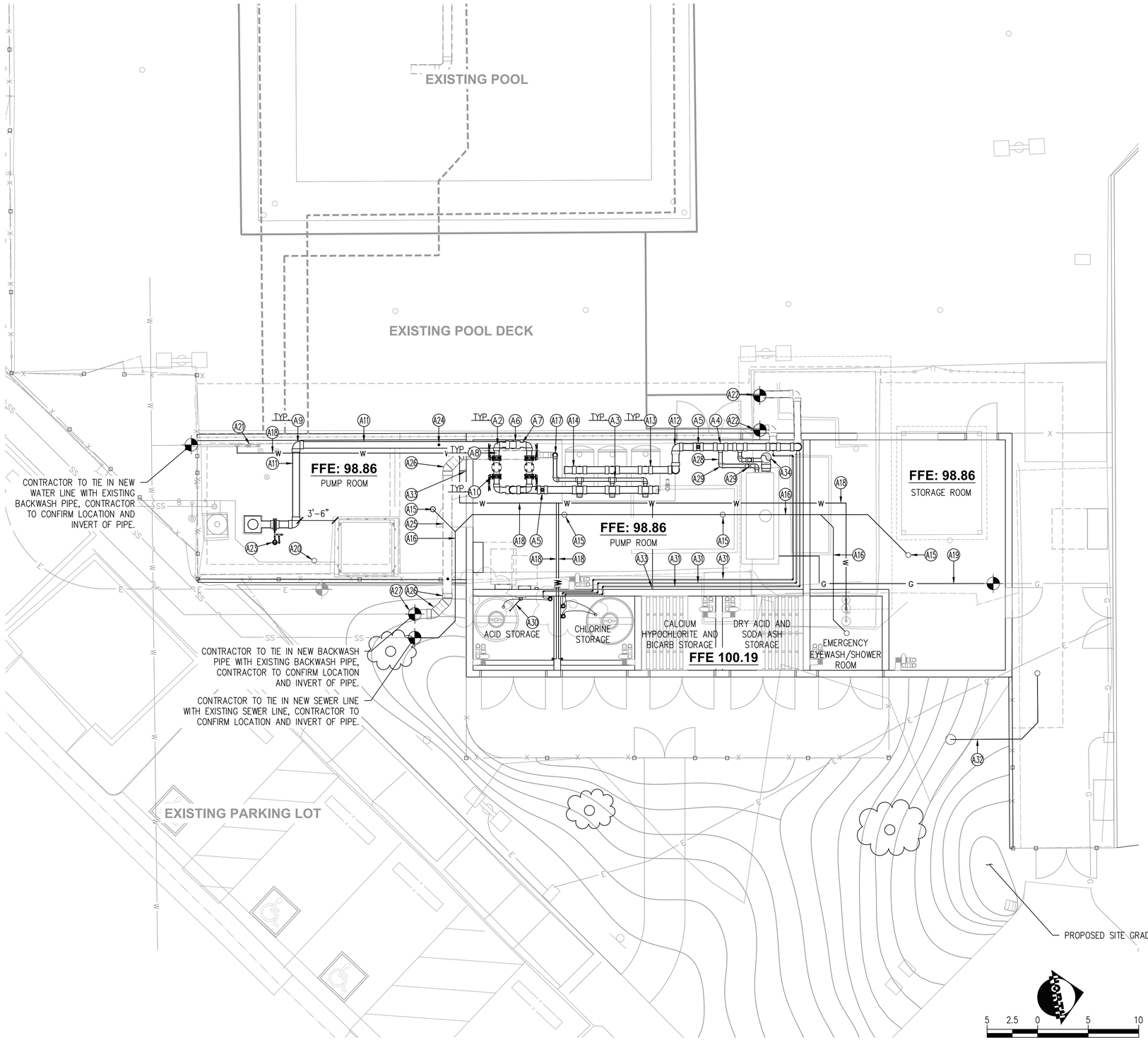

SITE PLAN

SCALE: 1"=5'-0"

PIPING NOTES

MECHANICAL PIPING NOTES

- A1 INSTALL NEW 4" PVC SCH. 80 PIPE
- A2 INSTALL NEW 4" PVC SCH. 80 90° ELBOW
- A3 INSTALL NEW 4" PVC SCH. 80 TEE
- A4 INSTALL NEW 8"X4"X8" PVC SCH. 80 TEE
- A5 INSTALL NEW 8"X2"X8" PVC SCH. 80 TEE
- A6 INSTALL NEW 8"X8"X8" PVC SCH. 80 TEE
- A7 INSTALL NEW 8"X6" PVC SCH. 80 REDUCING BUSHING (SPIGOT X SOCKET)
- A8 INSTALL NEW 6" PVC SCH. 80 PIPE
- A9 INSTALL NEW 6" PVC SCH. 80 90° ELBOW
- A10 INSTALL NEW 6" SCH 80 PVC BUTTERFLY VALVE
- A11 INSTALL NEW 8" PVC SCH. 80 PIPE
- A12 INSTALL NEW 8" PVC SCH. 80 90° ELBOW
- A13 INSTALL NEW 8" PVC SCH. 80 TEE
- A14 INSTALL NEW 8" PVC SCH. 80 PIPE END CAP
- A15 INSTALL NEW 3" SCH 40 PVC SEWER DRAIN
- A16 INSTALL NEW 3" SCH 40 PVC SEWER DRAIN PIPE
- A17 INSTALL STANDPIPE PER DETAIL A SHEET W4.1
- A18 INSTALL NEW 2" PVC WATER LINE TO CONNECT TO NEW EYEWASH STATION
- A19 INSTALL NEW 3" BLACK IRON GAS LINE TO CONNECT TO EXISTING HEATER
- A20 INSTALL NEW LEVEL SENSOR PER DETAIL F SHEET M4.1
- A21 INSTALL NEW FILL LINE AND SOLENOID VALVE PER DETAIL E SHEET M4.1
- A22 NEW PVC PIPE TIE INTO EXISTING PVC PIPE
- A23 NEW PRESSURE GAUGE AND TRANSMITTER PER DETAIL B SHEET M4.2
- A24 NEW FLOW METER PER EQ. LIST #13 ON SHEET M1.0
- A25 NEW 10" DWV PIPE
- A26 NEW 10" DWV 45° BEND
- A27 NEW DWV TO VCP TIE IN PER DETAIL D SHEET M4.2
- A28 NEW 4" CPVC PIPE
- A29 NEW 4" CPVC 90° ELBOW
- A30 NEW 1/2" CHEMICAL FUME SCRUBBER TUBING PER DETAIL B SHEET M4.1
- A31 NEW 1/2" CHEMICAL SLEEVE PER DETAIL D SHEET M4.0
- A32 NEW 4" SD LINE PER SHEET C2.2
- A33 NEW 3/4" HOSE BIB
- A34 10" PVC COMBUSTION AIR DUCT PER SHEET M4.3

CITY OF SANTA CLARITA
BUILDING & SAFETY
APPROVED
Under SCMC Titles 18, 19, 20, 21, 24, 25
Sep 16, 2025
F. Svendsen
BLD25-00576 (ARCH)
The approved plans must be available at the construction site at all times for inspection by the building inspector. Changes shall not be made without written permission from the City of Santa Clarita Building & Safety Division. The approval of these plans shall not be construed to permit or approve any violation of the applicable codes, ordinances, or other laws.

PACE
Advanced Water Engineering
17520 Newhope Street, Suite 200 | Fountain Valley, CA 92708
P: (714) 481-7300 | www.pacewater.com

REVIEWED BY:		
Luis Trujillo	09/30/2025	
PM - DESIGN	EXECUTION DATE	
REVIEWED BY:		
	09/30/2025	
PM - CONSTRUCTION	EXECUTION DATE	

IN ACCORDANCE WITH RESOLUTION No. 19-6, AS A RESOLUTION OF THE CITY COUNCIL OF THE CITY OF SANTA CLARITA DELEGATING DISCRETIONARY AUTHORITY TO THE DIRECTOR OF PUBLIC WORKS, DIRECTOR OF RECREATION AND COMMUNITY SERVICES, DIRECTOR OF NEIGHBORHOOD SERVICES, CITY ENGINEER, AND ASSISTANT CITY ENGINEERS TO APPROVE PLANS AND DESIGNS FOR THE CONSTRUCTION OF OR IMPROVEMENTS TO PUBLIC PROPERTY FOR PURPOSES OF DESIGN IMMUNITY PURSUANT TO GOVERNMENT CODE SECTION 830.6 FOR THE CITY OF SANTA CLARITA, I DO HEREBY EXERCISE THE DISCRETION ELECTED TO ME AND APPROVE THE PLAN OR DESIGN, OR AMENDMENT OR MODIFICATION TO THE PLAN OR DESIGN, OR A CONSTRUCTION OF, OR AN IMPROVEMENT TO THE PUBLIC FACILITY, STRUCTURE, OR PROPERTY TO WHICH THIS STATEMENT, MY SIGNATURE AND DATE IS AFFIXED.

100% CD FOR REVIEW

LICENSED ARCHITECT — STATE OF CALIFORNIA — EXP. DEC.31 2025

PREPARED BY
ZIRANG SONG
PROJECT ENGINEER
R.C.E. NO. # 69315
EXP: 06/30/2026

DRAWN	SCALE	DATE
J.P		03/2025
DESIGNED		
J.P		
CHECKED		
Z.S		

TITLE
PIPING PLAN

C258
NEWHALL PARK POOL
PUMP ROOM RENOVATION
PLANS (100% CD)
SANTA CLARITA CA

SHEET
M2.1
32 OF 61 SHEETS

JOB NO. C258

Docusign Envelope ID: F28B5F90-223C-42A7-9ED1-4686B8540361
Xrefs: C258 Titleblock.dwg; Mechanical Layout.dwg; Piping Layout.dwg; Grading Plan.dwg; Existing Utilities.dwg; C258 Survey Baseflie.dwg; C258 Survey Baseflie.dwg; C258 Survey Baseflie.civil 3d.dwg
Dimscale = 1; LTscale = 1; PSltscale = 1; ACAD Ver. = 23.0s (LMS Tech); Viewtwin = 1
e:\C258\engineering\C258-04 M2.1 PIPING PLAN.dwg - Tab: 32 - by jpenderghast on 09/29/25 at 4:22:36 PM

Sep. 29, 2025

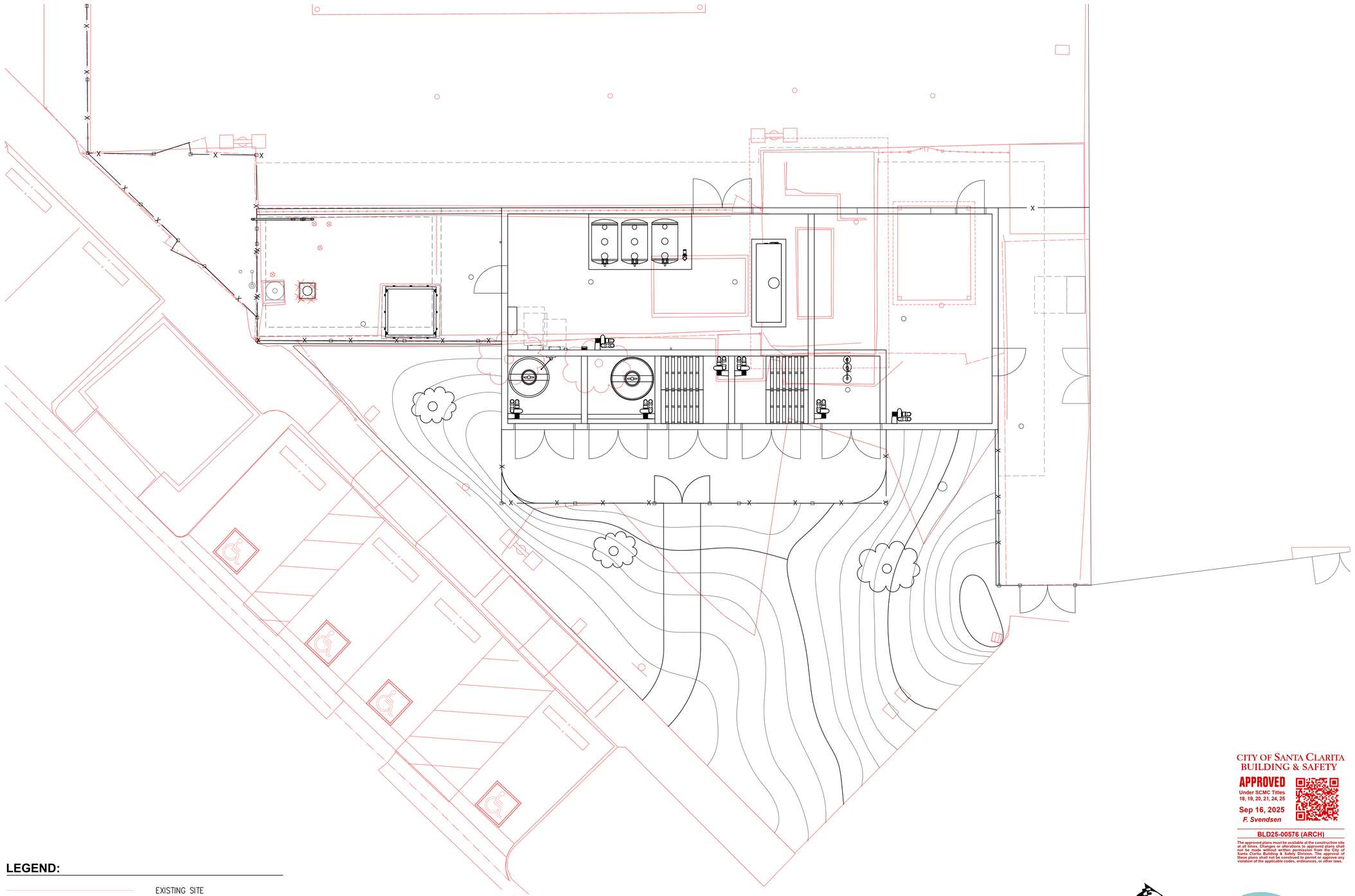

LEGEND:

EXISTING SITE

PROPOSED PUMP STATION

SITE PLAN
SCALE: 1"=5'-0"

CITY OF SANTA CLARITA
BUILDING & SAFETY
APPROVED
Under SCMC Titles 18, 19, 20, 21, 24, 25
Sep 16, 2025
F. Svendsen
BLD25-00576 (ARCH)
The approved plans must be available at the construction site at all times. Changes or alterations to approved plans shall not be made without written permission from the City of Santa Clarita Building & Safety Division. The approval of these plans shall not be construed to permit or approve any violation of the applicable codes, ordinances, or other laws.

5 2.5 0 5 10

NORTH

PACE
Advanced Water Engineering
17520 Newhope Street, Suite 200 | Fountain Valley, CA 92708
P: (714) 481-7300 | www.pacewater.com

REVIEWED BY: Luis Trujillo	09/30/2025
PM- DESIGN	EXECUTION DATE
REVIEWED BY:	09/30/2025
PM- CONSTRUCTION	EXECUTION DATE

IN ACCORDANCE WITH RESOLUTION No. 19-6, AS A RESOLUTION OF THE CITY COUNCIL OF THE CITY OF SANTA CLARITA DELEGATING DISCRETIONARY AUTHORITY TO THE DIRECTOR OF PUBLIC WORKS, DIRECTOR OF RECREATION AND COMMUNITY SERVICES, DIRECTOR OF NEIGHBORHOOD SERVICES, CITY ENGINEER, AND ASSISTANT CITY ENGINEERS TO APPROVE PLANS AND DESIGNS FOR THE CONSTRUCTION OF OR IMPROVEMENTS TO PUBLIC PROPERTY FOR PURPOSES OF DESIGN IMMUNITY PURSUANT TO GOVERNMENT CODE SECTION 830.6 FOR THE CITY OF SANTA CLARITA, I DO HEREBY EXERCISE THE DISCRETION DELEGATED TO ME AND APPROVE THE PLAN OR DESIGN, OR AMENDMENT OR MODIFICATION TO THE PLAN OR DESIGN, OR A CONSTRUCTION OF, OR AN IMPROVEMENT TO THE PUBLIC FACILITY, STRUCTURE, OR PROPERTY TO WHICH THIS STATEMENT, MY SIGNATURE AND DATE IS AFFIXED.

100% CD FOR REVIEW

REGISTERED ARCHITECT
JAMES PARKER ARCHITECTS
STATE OF CALIFORNIA
EXP. DEC.31, 2025

PREPARED BY
ZIRANG SONG
PROJECT ENGINEER
R.C.E. NO. # 69315
EXP. 06/30/2026

DRAWN J.P	SCALE
DESIGNED J.P	
CHECKED Z.S	DATE 03/2025

TITLE
BUILDING FOOTPRINT

C258
NEWHALL PARK POOL
PUMP ROOM RENOVATION
PLANS (100% CD)
SANTA CLARITA *CA*

SHEET
M2.2
33 OF 61 SHEETS

JOB NO. C258

Docusign Envelope ID: F28B5F90-223C-42A7-8ED1-4686B9E4D361

Xrefs: C258 Titleblock.dwg; Mechanical Layout.dwg; Grading Plan.dwg; C258 Survey Basefile.dwg; Piping Layout.dwg; C258 Survey Basefile civil 3d.dwg
Dmscale = 1; LTscale = 1; PSltscale = 1; ACAD Ver. = 23.0s (LMS Tech); Visretain = 1

c:\C258\engineering\c258-04 11028.cd\sheets\C258-04 M2.2 BUILDING FOOTPRINT.dwg - Tab: 33 - by gonzalezghost on 09/29/25 at 4:22:29 PM

Sep. 29, 2025

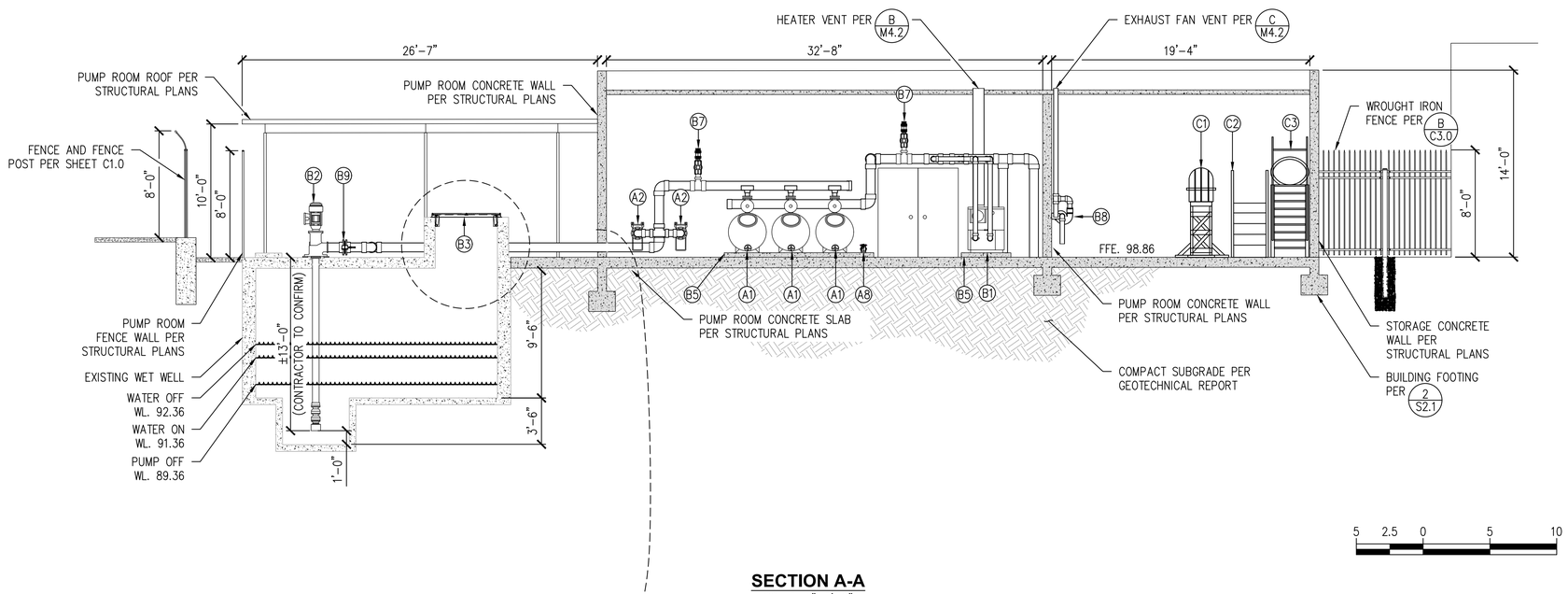

SECTION A-A

SCALE: 1"=5'-0"

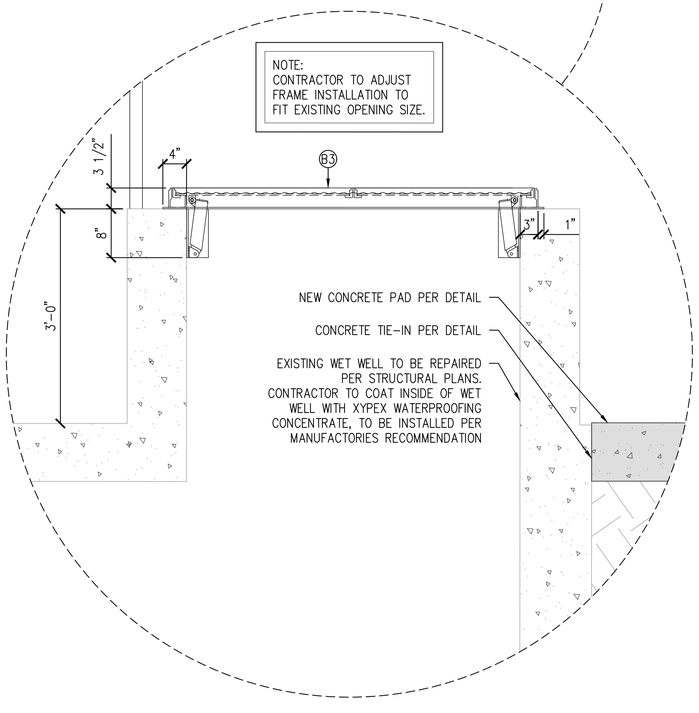

EXISTING WET WELL DETAIL

SCALE: 1"=1'-0"

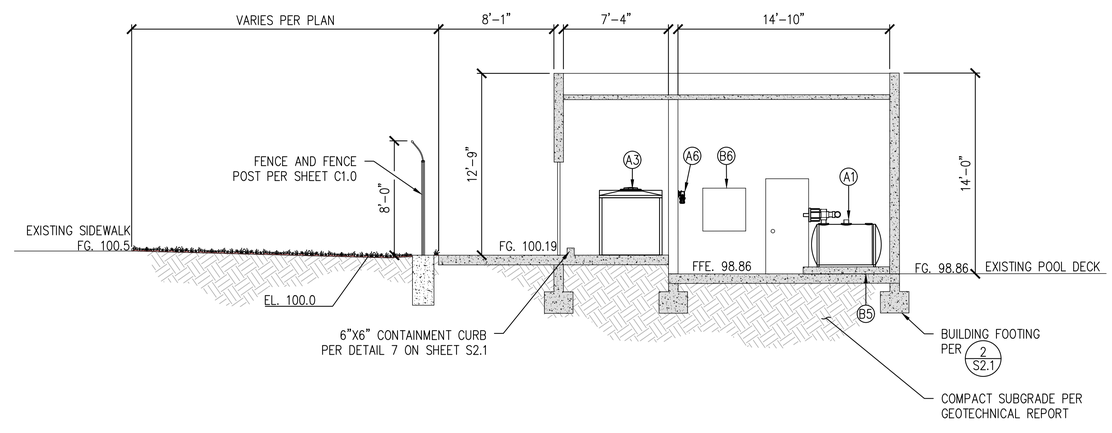

SECTION B-B

SCALE: 1"=5'-0"

CONSTRUCTION NOTES

PUMP STATION EQUIPMENT TO BE PROTECTED AND REUSED

- A1 INSTALL POOL FILTER PER EQ. LIST #1 ON SHEET M1.0
- A2 INSTALL BASKET STRAINER PER EQ. LIST #2 ON SHEET M1.0
- A3 INSTALL 500 GAL CHLORINE TANK PER EQ. LIST #3 ON SHEET M1.0
- A4 INSTALL 350 GAL ACID TANK PER EQ. LIST #4 ON SHEET M1.0
- A5 INSTALL EYE WASH STATION PER EQ. LIST #5 ON SHEET M1.0
- A6 INSTALL CHLORINE FEED PUMP PER EQ. LIST #6 ON SHEET M1.0
- A7 INSTALL ACID FEED PUMP PER EQ. LIST #7 ON SHEET M1.0
- A8 INSTALL PRESSURE SUSTAINING PUMP PER EQ. LIST #9 ON SHEET M1.0

PUMP STATION NEW EQUIPMENT

- B1 INSTALL POOL HEATER PER EQ. LIST #8 ON SHEET M1.0
- B2 INSTALL VERTICAL TURBINE PUMP PER EQ. LIST #10 ON SHEET M1.0
- B3 INSTALL 60" x 60" ALUMINUM ACCESS HATCH PER EQ. LIST #11 ON SHEET M1.0 AND DETAIL C ON SHEET M4.0
- B4 INSTALL CHEMICAL CONTROLLER PER EQ. LIST #12 ON SHEET M1.0
- B5 INSTALL HOUSEKEEPING PAD PER DETAIL 6 SHEET S2.1
- B6 INSTALL NEW ELECTRICAL PANEL PER ELECTRICAL PLANS
- B7 INSTALL NEW AIR RELIEF VALVE PER DETAIL D SHEET M4.1
- B8 INSTALL NEW EXHAUST FAN PER DETAIL C SHEET M4.2
- B9 INSTALL NEW PRESSURE GAUGE AND TRANSDUCER PER DETAIL B SHEET M4.2

EXISTING EQUIPMENT TO BE STORED

- C1 LIFEGUARD STAND
- C2 POOL ADA STAIRS
- C3 POOL SLIDE

CITY OF SANTA CLARITA BUILDING & SAFETY
APPROVED
Under SCMC Titles 18, 19, 20, 21, 24, 25
Sep 16, 2025
F. Svendsen
BLD25-00576 (ARCH)
The approved plans must be available at the construction site at all times. Changes or alterations to approved plans shall not be made without written permission from the City of Santa Clarita Building & Safety Division. The approval of these plans shall not be construed to permit or approve any violation of the applicable codes, ordinances, or other laws.

PACE Advanced Water Engineering
17520 Newhope Street, Suite 200 | Fountain Valley, CA 92708
P: (714) 481-7300 | www.pacewater.com

REVIEWED BY: Luis Trujillo 09/30/2025 PM-DESIGN EXECUTION DATE
REVIEWED BY: 09/30/2025 PM-CONSTRUCTION EXECUTION DATE

IN ACCORDANCE WITH RESOLUTION No. 19-6, AS A RESOLUTION OF THE CITY COUNCIL OF THE CITY OF SANTA CLARITA DELEGATING DISCRETIONARY AUTHORITY TO THE DIRECTOR OF PUBLIC WORKS, DIRECTOR OF RECREATION AND COMMUNITY SERVICES, DIRECTOR OF PLANNING AND BUILDING AND ASSISTANT CITY ENGINEER TO APPROVE PLANS AND DESIGNS FOR THE CONSTRUCTION OF IMPROVEMENTS TO PUBLIC PROPERTY FOR PURPOSES OF DESIGN IMMUNITY PURSUANT TO GOVERNMENT CODE SECTION 830.6 FOR THE CITY OF SANTA CLARITA, I DO HEREBY EXERCISE THE AUTHORITY DELEGATED TO ME AND APPROVE THE PLAN OR DESIGN, AND ANY MINOR OR MODIFICATION TO THE PLAN OR DESIGN, OR A CONSTRUCTION, OR, OR AN IMPROVEMENT TO THE PUBLIC FACILITY, STRUCTURE, OR PROPERTY TO WHICH THIS STATEMENT, MY SIGNATURE AND DATE IS AFFIXED.

100% CD FOR REVIEW

LICENSED ARCHITECT — STATE OF CALIFORNIA — EXP. DEC.31

PREPARED BY ZIRANG SONG
PROJECT ENGINEER
R.C.E. NO. # 69315
EXP. 06/30/2026
DRAWN J.P
DESIGNED J.P
CHECKED Z.S
SCALE
DATE 03/2025

TITLE **PUMP ROOM SECTION**

C258 **NEWHALL PARK POOL**
PUMP ROOM RENOVATION
PLANS (100% CD)
SANTA CLARITA *CA*

SHEET **M3.0**
34 OF 61 SHEETS

JOB NO. C258

Docusign Envelope ID: F28B5F90-223C-42A7-9ED1-46868B54D361
Xrefs: C258 Titleblock.dwg; Section View.dwg; Mechanical Layout.dwg; Piping Layout.dwg; Grading Plan.dwg; C258 Survey Baseflie.dwg; C258 Survey Baseflie_civil 3d.dwg
Dimscale = 1; LTscale = 1; PSltscale = 1; ACAD Ver. - 23.0s (LMS Tech); Visretain = 1
r:\C258\engineering\c258-04 M3.0 PUMP ROOM SECTION.dwg - Tab: 34 - by jpendergrast on 09/29/25 at 4:22:22 PM

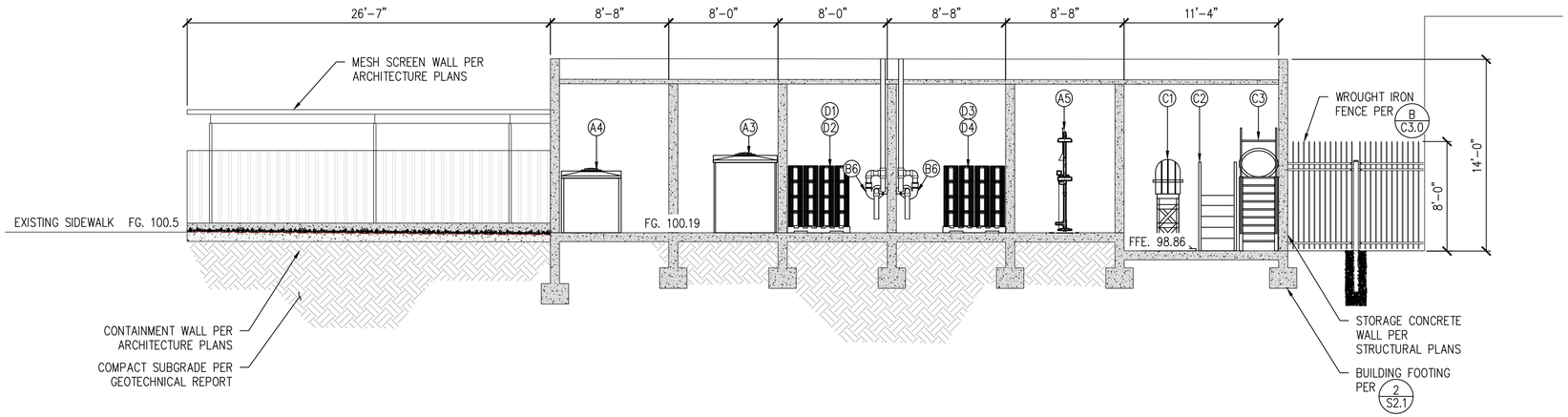

SECTION C-C

SCALE: 1"=5'-0"

CONSTRUCTION NOTES

PUMP STATION EQUIPMENT TO BE PROTECTED AND REUSED

- (A1) INSTALL POOL FILTER PER EQ. LIST #1 ON SHEET M1.0
- (A2) INSTALL BASKET STRAINER PER EQ. LIST #2 ON SHEET M1.0
- (A3) INSTALL 500 GAL CHLORINE TANK PER EQ. LIST #3 ON SHEET M1.0
- (A4) INSTALL 350 GAL ACID TANK PER EQ. LIST #4 ON SHEET M1.0
- (A5) INSTALL EYE WASH STATION PER EQ. LIST #5 ON SHEET M1.0
- (A6) INSTALL CHLORINE FEED PUMP PER EQ. LIST #6 ON SHEET M1.0
- (A7) INSTALL ACID FEED PUMP PER EQ. LIST #7 ON SHEET M1.0

PUMP STATION NEW EQUIPMENT

- (B1) INSTALL POOL HEATER PER EQ. LIST #8 ON SHEET M1.0
- (B2) INSTALL VERTICAL TURBINE PUMP PER EQ. LIST #10 ON SHEET M1.0
- (B3) INSTALL 60" X 60" ALUMINUM ACCESS HATCH PER EQ. LIST #11 ON SHEET M1.0 AND DETAIL C ON SHEET M4.0
- (B4) INSTALL CHEMICAL CONTROLLER PER EQ. LIST #12 ON SHEET M1.0
- (B5) INSTALL HOUSEKEEPING PAD PER DETAIL 6 SHEET S2.1
- (B6) INSTALL NEW EXHAUST FAN PER DETAIL C SHEET M4.2

EXISTING EQUIPMENT TO BE STORED

- (C1) LIFEGUARD STAND
- (C2) POOL ADA STAIRS
- (C3) POOL SLIDE

DRY CHEMICAL STORAGE

- (D1) CHEMICAL STORAGE OF CALCIUM HYPOCHLORITE
- (D2) CHEMICAL STORAGE OF BICARB
- (D3) CHEMICAL STORAGE OF DRY ACID
- (D4) CHEMICAL STORAGE OF SODA ASH

CITY OF SANTA CLARITA
BUILDING & SAFETY
APPROVED
Under SCMC Titles 18, 19, 20, 21, 24, 25
Sep 16, 2025
F. Svendsen
BLD25-00576 (ARCH)
The approved plans must be available at the construction site at all times. Changes or alterations to approved plans shall not be made without written permission from the City of Santa Clarita Building & Safety Division. The approval of these plans shall not be construed to permit or approve any violation of the applicable codes, ordinances, or other laws.

PACE
Advanced Water Engineering
17520 Newhope Street, Suite 200 | Fountain Valley, CA 92708
P: (714) 481-7300 | www.pacewater.com

REVIEWED BY:	09/30/2025
Luke Trujillo PM/DESIGNER	EXECUTION DATE
REVIEWED BY: Victor Gomez	09/30/2025
PM-CONSTRUCTION	EXECUTION DATE

IN ACCORDANCE WITH RESOLUTION No. 19-6, AS A RESOLUTION OF THE CITY COUNCIL OF THE CITY OF SANTA CLARITA DELEGATING DISCRETIONARY AUTHORITY TO THE DIRECTOR OF PUBLIC WORKS, DIRECTOR OF RECREATION AND COMMUNITY SERVICES, DIRECTOR OF NEIGHBORHOOD PRESERVATION, AND ASSISTANT CITY ENGINEER TO APPROVE PLANS AND DESIGNS FOR THE CONSTRUCTION OF OR IMPROVEMENTS TO PUBLIC PROPERTY FOR PURPOSES OF DESIGN IMMUNITY PURSUANT TO GOVERNMENT CODE SECTION 830.6 FOR THE CITY OF SANTA CLARITA, I DO HEREBY EXERCISE THE DISCRETION VESTED TO ME AND APPROVE A PLAN, DESIGN, OR AN IMPROVEMENT OR MODIFICATION TO THE PLAN OR DESIGN, OR A CONSTRUCTION OF, OR AN IMPROVEMENT TO THE PUBLIC FACILITY, STRUCTURE, OR PROPERTY TO WHICH THIS STATEMENT, MY SIGNATURE AND DATE IS AFFIXED.

100% CD FOR REVIEW

LICENSED ARCHITECT — ZIRANG SONG — No. 6395 — Exp. DEC.31.2026 — STATE OF CALIFORNIA

PREPARED BY
ZIRANG SONG
PROJECT ENGINEER
R.C.E. NO. # 69315
EXP. 06/30/2026

DRAWN	SCALE
J.P	
DESIGNED	
J.P	
CHECKED	DATE
Z.S	03/2025

TITLE
PUMP ROOM SECTION

C258
NEWHALL PARK POOL
PUMP ROOM RENOVATION
PLANS (100% CD)
SANTA CLARITA *CA*

SHEET **M3.1**
35 OF 61 SHEETS

JOB NO. C258

Sep. 29, 2025

Docusign Envelope ID: F28B5F90-223C-42A7-8ED1-46869B540361

Xrefs: C258_Titleblock.dwg; Section View.dwg; Mechanical Layout.dwg; Piping Layout.dwg; Grading Plan.dwg; C258_Survey Basefile.dwg; C258_Survey Basefile_civil_3d.dwg
Dimscale = 1; LTscale = 1; PSltscale = 1; ACAD Ver. = 23.0s (LMS Tech); Visretain = 1

c:\C258\engineering\c258-04 11028.cd\sheets\C258-04 M31 SECTION.dwg - Tab: 35 - by jpenderghast on 09/29/25 at 4:23:25 PM

Sep. 29, 2025

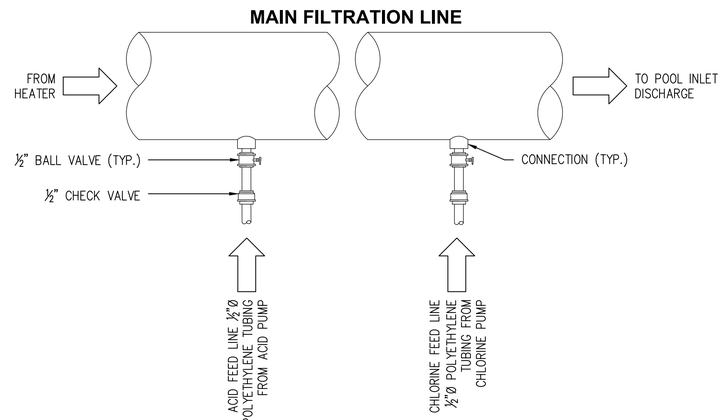

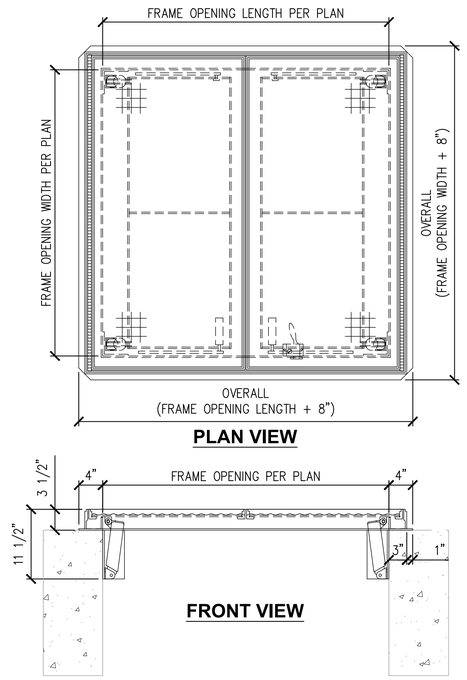

CONSTRUCTION NOTES:

1. USE CAUTION. COVER IS SPRING LOADED. DO NOT REMOVE SAFETY SHIPPING BOLT UNTIL UNIT IS TO BE INSTALLED AND IN NORMAL HORIZONTAL OPERATING POSITION.
2. BEFORE ANCHORING IN PLACE OPEN AND CLOSE DOOR. CHECK TO SEE THAT THE DOOR IN THE CLOSED POSITION RESTS ON THE FRAME ALL AROUND. IF NOT, SHIM UNDER THE FRAME AT THE PROPER CORNER.
3. FRAME AREAS THAT COME IN CONTACT WITH CONCRETE SHALL BE COATED WITH BITUMINOUS PAINT

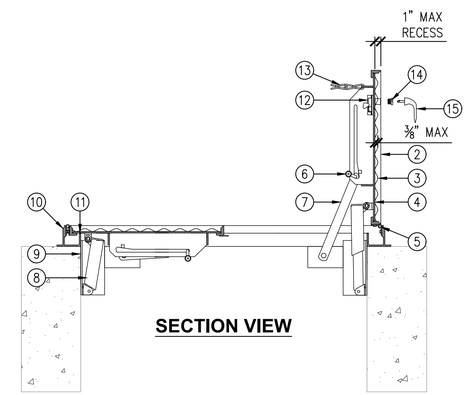

KEY NOTES:

1. DOUBLE LEAF ACCESS HATCH W/ PAN COVER PER "EJ" MODEL# H60601701.
2. 1" FILL (LANDSCAPE ARCHITECT TO MATCH SURROUNDING FINISH)
3. TERRAZZO REINFORCED WIRE MESH
4. ¼" ALUMINUM COVER
5. STAINLESS STEEL 3" PIANO HINGE
6. RED VINYL GRIP
7. EJ HEAVY DUTY AUTOMATIC HOLD OPEN ARM
8. LIFTING MECHANISM W/ REINFORCED COMPOSITE TUBES & COMPRESSION SPRINGS
9. ¼" SUPPORT PLATE WELDED TO FRAME
10. EJ ¼" ALUMINUM CHANNEL W/ EXTRUDED 1" ANCHOR FLANGE
11. ⅛"ø NEOPRENE CONTINUOUS BUMPER ALL AROUND
12. STANDARD SLAM LOCK
13. HEAVY DUTY CHECK CHAIN
14. REMOVABLE COVER PLUG
15. REMOVABLE SQUARE KEY WRENCH

E CHEMICAL FEED PIPE CONNECTION
SCALE: NTS

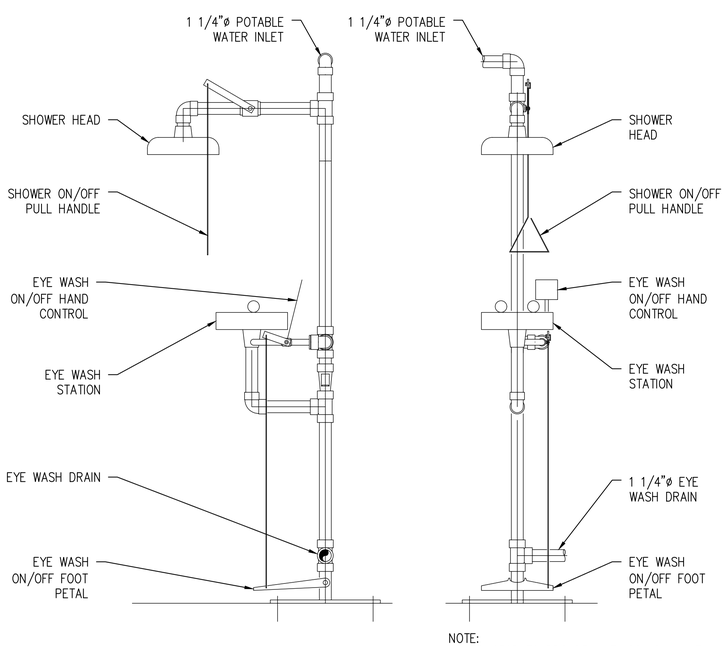

NOTE:
CONTRACTOR TO PROVDE ANTI-SCALD VALVE.

F EYEWASH STATION
SCALE: 1"=1'-0"

C ACCESS HATCH ASSEMBLY
SCALE: 1"=1'-0"

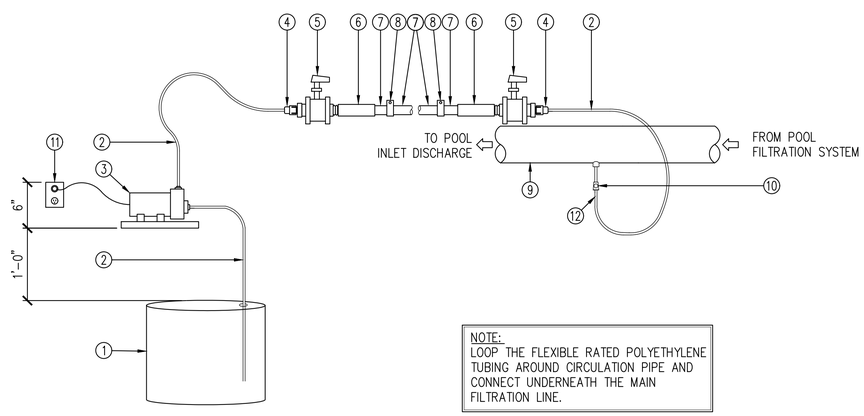

NOTE:
LOOP THE FLEXIBLE RATED POLYETHYLENE TUBING AROUND CIRCULATION PIPE AND CONNECT UNDERNEATH THE MAIN FILTRATION LINE.

KEYNOTES

1. CHEMICAL TANK
2. FLEXIBLE PRESSURE RATED POLYETHYLENE TUBING SUPPLIED BY PUMP MANUFACTURER (MAX DISTANCES')
3. CHEMICAL FEED PUMP PER EQUIPMENT LIST
4. PIPE TO TUBE ADAPTER TYPICAL
5. ISOLATION VALVE
6. 1/2" SCH. 80 PVC FIP FEMALE ADAPTER TYPICAL
7. 1/2" SCH. 80 PVC PIPE TYPICAL
8. 1/2" PIPE CLIP B-LINE #B3191 AT 24" O.C. MOUNTED TO WALL
9. POOL/SPA CIRCULATION PIPING
10. CHEMICAL INJECTOR SUPPLIED BY CHEMICAL PUMP MANUFACTURER
11. POWER OUTLET (ON/OFF CONTROL BY CHEMICAL CONTROLLER)
12. NEEDS TO BE ACCESSIBLE FROM THE GROUND BY PERSONNEL WITHOUT A LADDER

D CHEMICAL FEED SYSTEM
SCALE: NTS

CITY OF SANTA CLARITA
BUILDING & SAFETY
APPROVED
Under SCMC Titles 16, 19, 20, 21, 24, 25
Sep 16, 2025
F. Svendsen
BLD25-00576 (ARCH)
The approved plans must be available at the construction site at all times. Changes or alterations to approved plans shall be in accordance with applicable codes and shall be to the Santa Clarita Building & Safety Division. The approval of these plans shall not be construed to permit or approve any violation of the applicable codes, ordinances, or other laws.

PACE
Advanced Water Engineering
17520 Newhope Street, Suite 200 | Fountain Valley, CA 92708
P: (714) 481-7300 | www.pacewater.com

REVIEWED BY: Luis Trujillo PM-DESIGN	09/30/2025 EXECUTION DATE
REVIEWED BY: PM-CONSTRUCTION	09/30/2025 EXECUTION DATE

IN ACCORDANCE WITH RESOLUTION No. 19-6, AS A RESOLUTION OF THE CITY COUNCIL OF THE CITY OF SANTA CLARITA DELEGATING DISCRETIONARY AUTHORITY TO THE DIRECTOR OF PUBLIC WORKS, DIRECTOR OF RECREATION AND COMMUNITY SERVICES, BUILDING OFFICIAL, CITY ENGINEER AND ASSISTANT CITY ENGINEERS TO APPROVE PLANS AND DESIGNS FOR THE CONSTRUCTION OF OR IMPROVEMENTS TO PUBLIC PROPERTY FOR PURPOSES OF DESIGN IMMUNITY PURSUANT TO GOVERNMENT CODE SECTION 830.6 FOR THE CITY OF SANTA CLARITA, I DO HEREBY EXERCISE THE DISCRETION DELEGATED TO ME AND APPROVE THE PLAN OR DESIGN, AMENDMENT OR MODIFICATION TO THE PLAN OR DESIGN, OR A CONSTRUCTION, OF, OR AN IMPROVEMENT TO THE PUBLIC FACILITY, STRUCTURE, OR PROPERTY TO WHICH THIS STATEMENT, MY SIGNATURE AND DATE IS AFFIXED.

100% CD FOR REVIEW
LICENSED ARCHITECT ZIRANG SONG C-28046 Exp. DEC.31 2026 STATE OF CALIFORNIA

PREPARED BY ZIRANG SONG	PROJECT ENGINEER R.C.E. NO. # 69315 EXP. 06/30/2026
DRAWN J.P	SCALE
DESIGNED J.P	
CHECKED Z.S	DATE 03/2025

TITLE **PUMP ROOM DETAILS**

C258 **NEWHALL PARK POOL**
PUMP ROOM RENOVATION
PLANS (100% CD)
SANTA CLARITA CA

SHEET **M4.0**
36 OF 61 SHEETS

JOB NO. C258

Docusign Envelope ID: F28B5F90-223C-42A7-9ED1-46868B540361
Xrefs: C258 Titleblock.dwg; DETAIL.dwg
Dimscale = 1, LTscale = 1, PSltscale = 1, ACAD Ver. = 23.0s (LMS Tech), Visretain = 1
c:\C258\engineering\c258-04 M4.0 PUMP ROOM DETAILS.dwg - Tab: 36 - by jenderghost on 09/29/25 at 4:23:19 PM

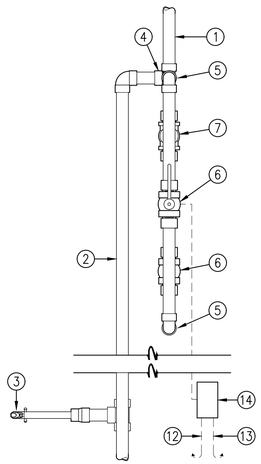

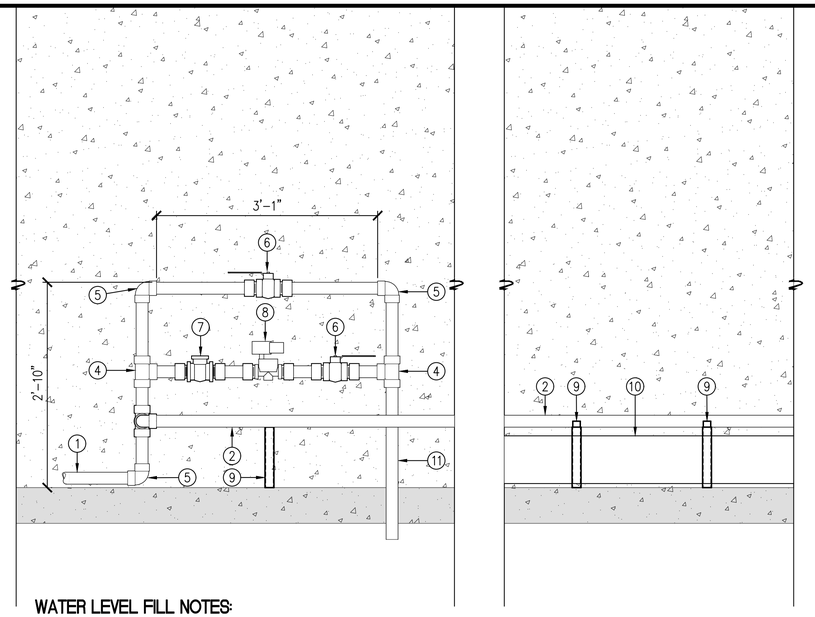

KEY NOTES:

1. 2" DOMESTIC WATER LINE PER MEP PLANS.
2. 2" LINE TO EYEWASH WITH UNDER CEILING INSTALLATION
3. 3/4" HOSE BIB
4. 2" SCH 80 PVC TEE
5. 2" SCH 80 PVC 90° ELBOW
6. 2" SCH 80 PVC BALL VALVE
7. 2" SCH 80 PVC CHECK VALVE
8. 2" SOLENOID VALVE TO CONNECT TO ELECTRICAL PANEL PER ELECTRICAL SHEETS
9. PIPE SUPPORT PER DETAIL D/M4.3
10. 8" PIPE TO FILTRATION SYSTEM
11. TO WET WELL AS INDECATED. PIPELINE TO TERMINATE ABOVE HIGH WATER LEVEL
12. 115VAC POWER SUPPLY TO MAIN CONTROL PANEL.
13. 24VAC TO WATER LEVEL SENSOR. SEE DETAIL F SHEET M4.1 FOR SENSOR DETAIL.
14. ELECTRONIC WATER LEVELER PER WARRICK. COMES WITH CONTROLLER, 1" SOLENOID VALVE, AND WATER LEVEL SENSOR.

WATER LEVEL FILL NOTES:

1. A WATER LEVEL SENSOR IS LOCATED INSIDE WET WELL PER SHEET M2.1
2. THE WATER LEVEL CONTROLLER WILL OPEN A SOLENOID VALVE WHEN THE WATER LEVEL IS LOW.
3. THE WATER LEVEL CONTROLLER WILL CLOSE THE SOLENOID VALVE WHEN THE WATER LEVEL IS AT NORMAL WATER LEVEL.

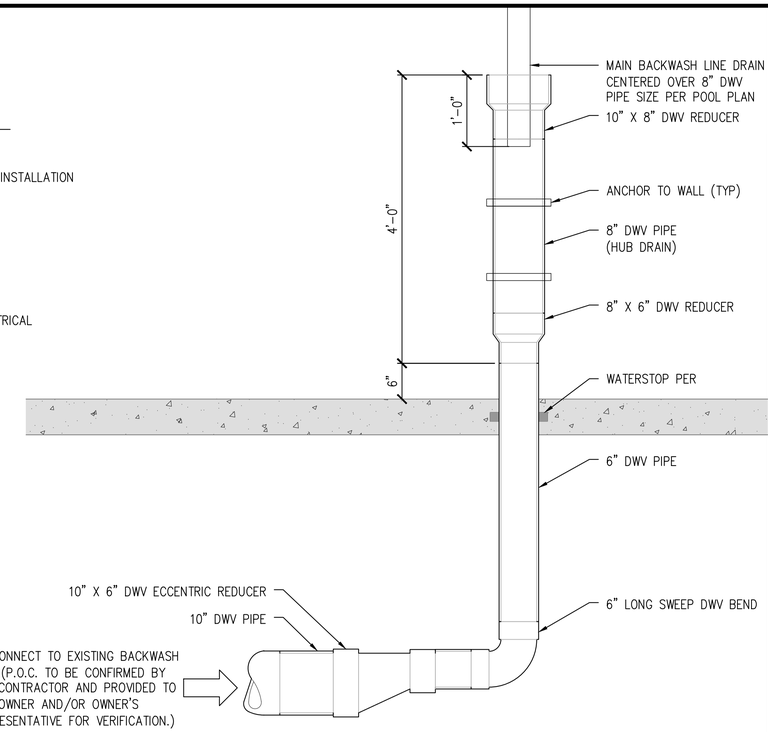

E FILL WITH SOLENOID VALVE
SCALE: 1"=1'-0"

NOTE: FIELD LOCATE LEVEL CONTROL LOCATION WITH OWNER REPRESENTATIVE.

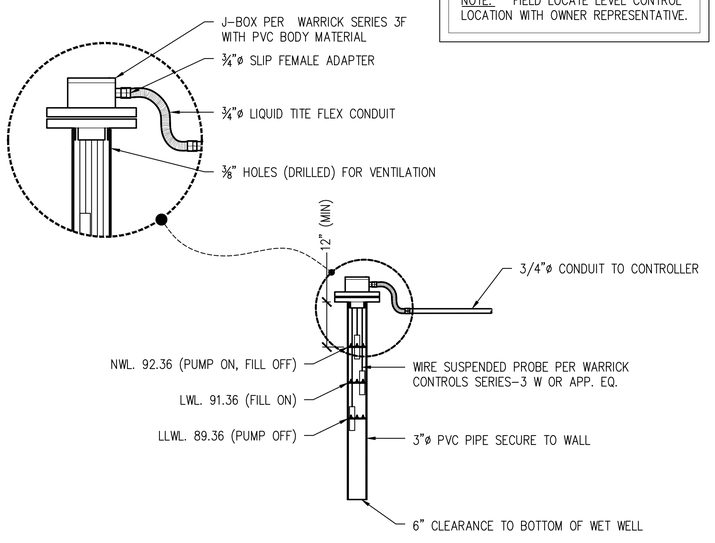

F LEVEL SENSOR DETAIL
SCALE: NTS

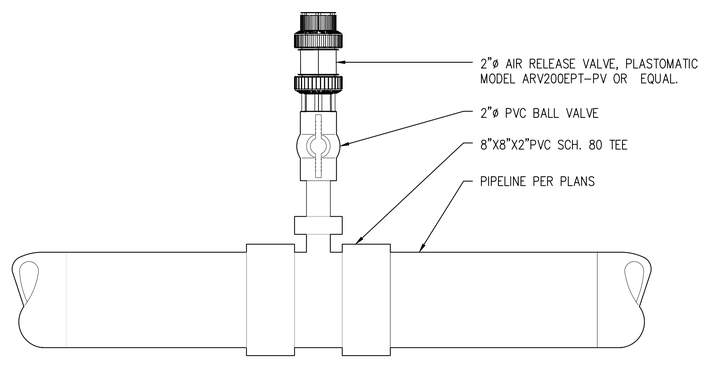

D AIR RELIEF VALVE DETAIL
SCALE: 2"=1'-0"

A STANDPIPE DETAIL
SCALE: 1"=1'-0"

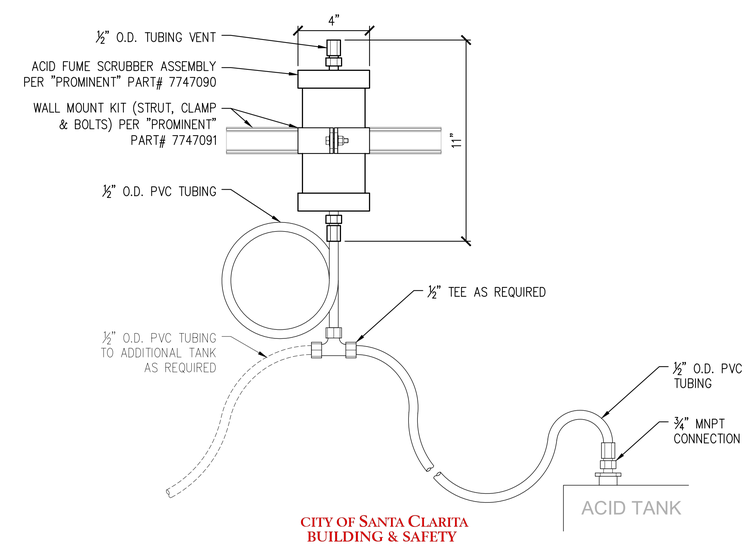

B CHEMICAL SCRUBBER DETAIL
SCALE: 1"=1'-0"

CITY OF SANTA CLARITA
BUILDING & SAFETY
APPROVED
Under SCMC Titles 18, 19, 20, 21, 24, 25
Sep 16, 2025
F. Svendsen
BLD25-00576 (ARCH)
The approved plans must be available at the construction site at all times. Changes or alterations to approved plans shall not be made without written permission from the City of Santa Clarita Building & Safety Division. The approval of these plans shall not be construed to permit or approve any violation of the applicable codes, ordinances, or other laws.

PACE
Advanced Water Engineering
17520 Newhope Street, Suite 200 | Fountain Valley, CA 92708
P: (714) 481-7300 | www.pacewater.com

REVIEWED BY: Luis Trujillo PM - DESIGN	09/30/2025 EXECUTION DATE
REVIEWED BY: Victor Ruiz PM - CONSTRUCTION	09/30/2025 EXECUTION DATE

IN ACCORDANCE WITH RESOLUTION No. 19-6, AS A RESOLUTION OF THE CITY COUNCIL OF THE CITY OF SANTA CLARITA DELEGATING DISCRETIONARY AUTHORITY TO THE DIRECTOR OF PUBLIC WORKS, DIRECTOR OF RECREATION AND COMMUNITY SERVICES, DIRECTOR OF PUBLIC WORKS/CITY ENGINEER, AND ASSISTANT CITY ENGINEERS TO APPROVE PLANS AND DESIGNS FOR THE CONSTRUCTION OF OR IMPROVEMENTS TO PUBLIC PROPERTY FOR PURPOSES OF DESIGN IMMUNITY PURSUANT TO GOVERNMENT CODE SECTION 830.6 FOR THE CITY OF SANTA CLARITA, I DO HEREBY EXERCISE THE DISCRETION VESTED IN ME BY THE ABOVE RESOLUTION TO APPROVE THE PLAN OR MODIFICATION TO THE PLAN OF DESIGN, OR A CONSTRUCTION, OF, OR AN IMPROVEMENT TO THE PUBLIC FACILITY, STRUCTURE, OR PROPERTY TO WHICH THIS STATEMENT, MY SIGNATURE AND DATE IS AFFIXED.

100% CD FOR REVIEW

LICENSED ARCHITECT — STATE OF CALIFORNIA — EXP. DEC.31

PREPARED BY ZIRANG SONG	PROJECT ENGINEER R.C.E. NO. # 69315 EXP. 06/30/2026
DRAWN J.P	SCALE
DESIGNED J.P	
CHECKED Z.S	DATE 03/2025

TITLE **PUMP ROOM DETAILS**

C258 **NEWHALL PARK POOL**
PUMP ROOM RENOVATION
PLANS (100% CD)
SANTA CLARITA CA

SHEET **M4.1**
37 OF 61 SHEETS

JOB NO. C258

Docusign Envelope ID: F28B5F90-223C-42A7-9ED1-46868B54D361
Xrefs: C258 Titleblock.dwg; DETAIL.dwg
Dimscale = 1, LTscale = 1, PSltscale = 1, ACAD Ver. = 23.0s (LMS Tech); Visretain = 1
c:\C258\engineering\c258-04 M4.1 PUMP ROOM DETAILS.dwg - Tab: 37 - by jenderghost on 09/29/25 at 4:23:13 PM

Sep. 29, 2025

Sep. 29, 2025

INSTALLATION CONFIGURATION

SIX COMMON INSTALLATION CONFIGURATIONS ARE SHOWN HERE AS GUIDELINES TO HELP YOU SELECT THE BEST LOCATION IN THE PIPING SYSTEM FOR A PADDLEWHEEL FLOW SENSOR.

ALWAYS MAXIMIZE DISTANCE BETWEEN SENSORS AND PUMP SOURCES.

PIPE	FLANGE		REDUCER		VALVE/GATE		90° ELBOW		2 x 90° ELBOW		2 x 90° ELBOW 3D	
SIZE	INLET	OUTLET	INLET	OUTLET	INLET	OUTLET	INLET	OUTLET	INLET	OUTLET	INLET	OUTLET
½"	5"	2 1/2"	7 1/2"	2 1/2"	2'–1"	2 1/2"	10"	2 1/2"	1'–0 1/2"	2 1/2"	1'–8"	2 1/2"
1"	10"	5"	1'–3"	5"	4'–2"	5"	1'–8"	5"	2'–1"	5"	3'–4"	5"
1 ½"	1'–3"	7 1/2"	1'–10 1/2"	7 1/2"	6'–3"	7 1/2"	2'–6"	7 1/2"	3'–1 1/2"	7 1/2"	5'–0"	7 1/2"
2"	1'–8"	10"	2'–6"	10"	8'–4"	10"	3'–4"	10"	4'–2"	10"	6'–8"	10"
2 ½"	2'–1"	1'–0 1/2"	3'–1 1/2"	1'–0 1/2"	10'–5"	1'–0 1/2"	4'–2"	1'–0 1/2"	5'–2 1/2"	1'–0 1/2"	8'–4"	1'–0 1/2"
3"	2'–6"	1'–3"	3'–9"	1'–3"	12'–6"	1'–3"	5'–0"	1'–3"	6'–3"	1'–3"	10'–0"	1'–3"
4"	3'–4"	1'–8"	5'–0"	1'–8"	16'–8"	1'–8"	6'–8"	1'–8"	8'–4"	1'–8"	13'–4"	1'–8"
6"	5'–0"	2'–6"	7'–6"	2'–6"	25'–0"	2'–6"	10'–0"	2'–6"	12'–6"	2'–6"	20'–0"	2'–6"
8"	6'–8"	3'–4"	10'–0"	3'–4"	33'–4"	3'–4"	13'–4"	3'–4"	16'–8"	3'–4"	26'–8"	3'–4"
10"	8'–4"	4'–2"	12'–6"	4'–2"	41'–8"	4'–2"	16'–8"	4'–2"	20'–10"	4'–2"	33'–4"	4'–2"
12"	10'–0"	5'–0"	15'–0"	5'–0"	50'–0"	5'–0"	20'–0"	5'–0"	25'–0"	5'–0"	40'–0"	5'–0"

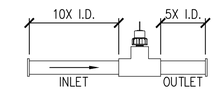

FLANGE

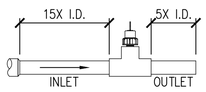

REDUCER

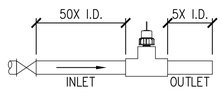

VALVE / GATE

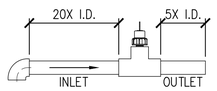

90° ELBOW

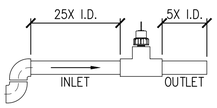

2 x 90° ELBOW

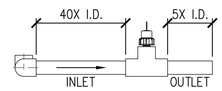

2 x 90° ELBOW 3 DIMENSIONS

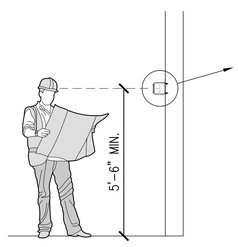

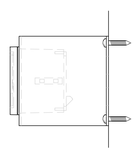

SIDE

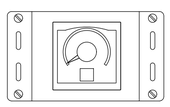

FRONT

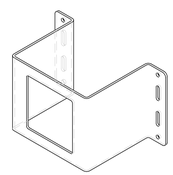

WALL MOUNT BRACKET
(3-5000.596)

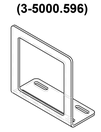

SURFACE MOUNTING BRACKET
(3-5000.598)

OPTIONAL MOUNTING BRACKETS

SENSOR MOUNTING POSITION

HORIZONTAL PIPE RUNS: MOUNT SENSOR AT A 45° ANGLE TO AVOID AIR BUBLES (PIPE MUST BE FULL). DO NOT MOUNT THE SENSOR ON BOTTOM OF THE PIPE IF SEDIMENTATION IS LIKELY.

VERTICAL PIPE RUNS: MOUNT SENSOR IN ANY ORIENTATION. UPWARD FLOW IS PREFERRED TO ENSURE FULL PIPE.

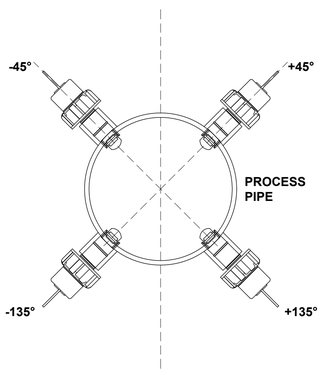

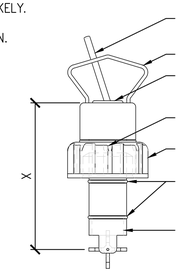

25 FT CABLE (STANDARD) TO SIGNET FLOW MONITOR
LARGE BAIL FOR SENSOR REMOVAL
½" NPT CONDUIT CONNECTION
1–¼" NPSM THREADED CAP
REMOTE MOUNT SENSOR PER "SIGNET" MODEL# P51530
DUAL O–RING SEAL
ONE–PIECE INJECTION MOLDED SENSOR BODY

PIPE RANGE	X
½" TO 4"	4.1"
5" TO 8"	5.4"
10" AND UP	8.4"

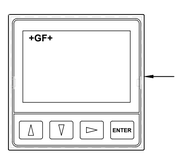

FLOW TRANSMITTER PER "SIGNET" MODEL# 9900. CONTRACTOR TO PROVIDE POWER PER MANUFACTURER RECOMMENDATIONS.

F FLOW SENSOR DETAIL
SCALE: NTS

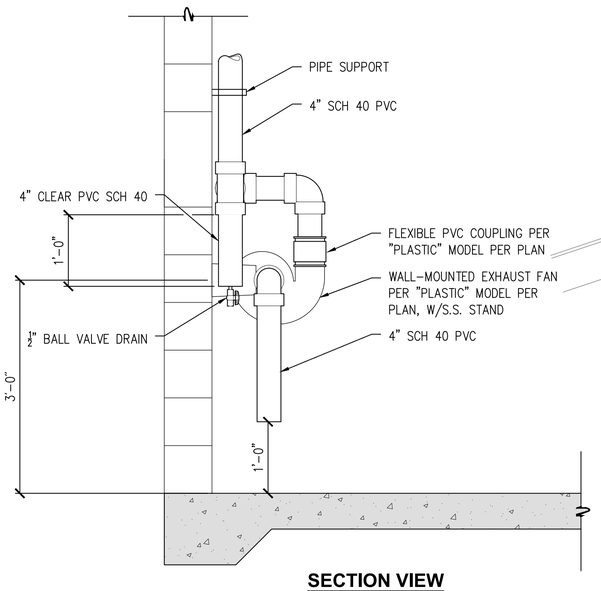

SECTION VIEW

C FAN INSTALLATION DETAIL
SCALE: 1"=1'-0"

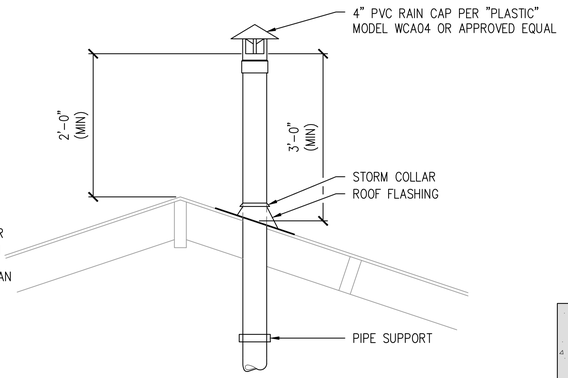

ROOF SECTION VIEW

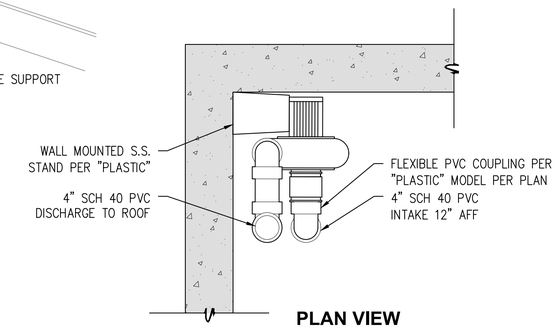

PLAN VIEW

REPAIR COUPLING TABLE	
SIZE	MODEL
10"X10"	1006–1010RC

NOTE:
1. SHIELDED COUPLING PER MANUFACTURER.
2. CONTRACTOR TO CONFIRM EXISTING VCP PIPE O.D. BEFORE PURCHASING COUPLING

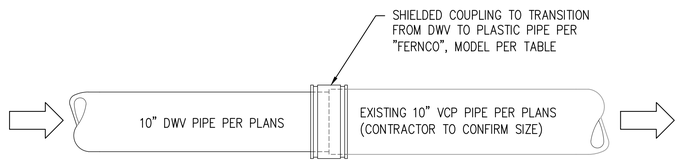

D EXISTING VCP TO PROPOSED DWV PIPE CONNECTION DETAIL
SCALE: 1"=1'-0"

CITY OF SANTA CLARITA BUILDING & SAFETY
APPROVED
Under SCMC Titles 18, 19, 20, 21, 24, 25
Sep 16, 2025
F. Svendsen
BLD25-00576 (ARCH)
The approved plans must be available at the construction site at all times. Changes or alterations to approved plans shall not be made without written permission from the City of Santa Clarita Building & Safety Division. The approval of these plans shall not permit violations of any law or cause a violation of the applicable codes, ordinances, or other laws.

PACE Advanced Water Engineering
17520 Newhope Street, Suite 200 | Fountain Valley, CA 92708
P: (714) 481-7300 | www.pacewater.com

REVIEWED BY PM-DESIGN	09/30/2025	EXECUTION DATE
REVIEWED BY PM-CONSTRUCTION	09/30/2025	EXECUTION DATE

IN ACCORDANCE WITH RESOLUTION No. 19–6, AS A RESOLUTION OF THE CITY COUNCIL OF THE CITY OF SANTA CLARITA DELEGATING DISCRETIONARY AUTHORITY TO THE DIRECTOR OF PUBLIC WORKS, DIRECTOR OF RECREATION AND COMMUNITY SERVICES, DIRECTOR OF NEIGHBORHOOD SERVICES, CITY ENGINEER AND ASSISTANT CITY ENGINEERS TO APPROVE PLANS AND DESIGNS FOR THE CONSTRUCTION OF OR IMPROVEMENTS TO PUBLIC PROPERTY FOR PURPOSES OF DESIGN IMMUNITY PURSUANT TO GOVERNMENT CODE SECTION 830.6 FOR THE CITY OF SANTA CLARITA, I DO HEREBY EXERCISE THE DISCRETION DELEGATED TO ME AND APPROVE THE PLAN OR DESIGN, OR A CONSTRUCTION OR MODIFICATION TO THE PLAN OR DESIGN, OR A CONSTRUCTION OF, OR AN IMPROVEMENT TO THE PUBLIC FACILITY, STRUCTURE, OR PROPERTY TO WHICH THIS STATEMENT, MY SIGNATURE AND DATE IS AFFIXED.

100% CD FOR REVIEW

LICENSED ARCHITECT — STATE OF CALIFORNIA — EXP. DEC.31.2026

PREPARED BY ZIRANG SONG
PROJECT ENGINEER
R.C.E. NO. # 69315
EXP. 06/30/2026

DRAWN	SCALE	DATE
J.P		03/2025
DESIGNED J.P		
CHECKED Z.S		

TITLE PUMP ROOM DETAILS

C258 NEWHALL PARK POOL
PUMP ROOM RENOVATION
PLANS (100% CD)
SANTA CLARITA CA

SHEET M4.2
38 OF 61 SHEETS

JOB NO. C258

Docusign Envelope ID: F28B5F90-223C-42A7-9ED1-46B69B54D361

Xrefs: C258_Titleblock.dwg; DETAIL.dwg
Dimscale = 1; LTscale = 1; PSltscale = 1; ACAD Ver. = 23.0s (LMS Tech); Visretain = 1

r:\C258\engineering\c258-04 (100% cd)\sheets\C258-04 M4.2 PUMP ROOM DETAILS.dwg – Tab: 38 – by gpenderghast on 09/29/25 at 4:23:08 PM

Sep. 29, 2025

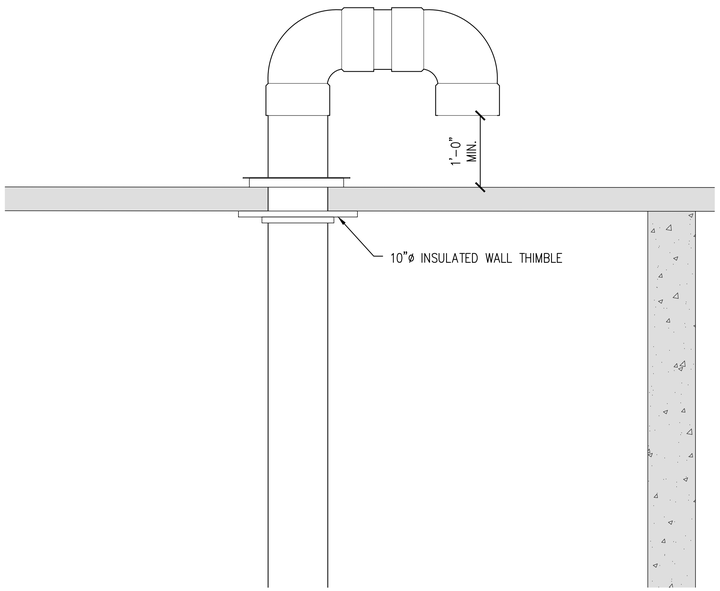

E CUMBUSTION AIR DUCT PENETRATION DETAIL
SCALE: 1"=1'-0"

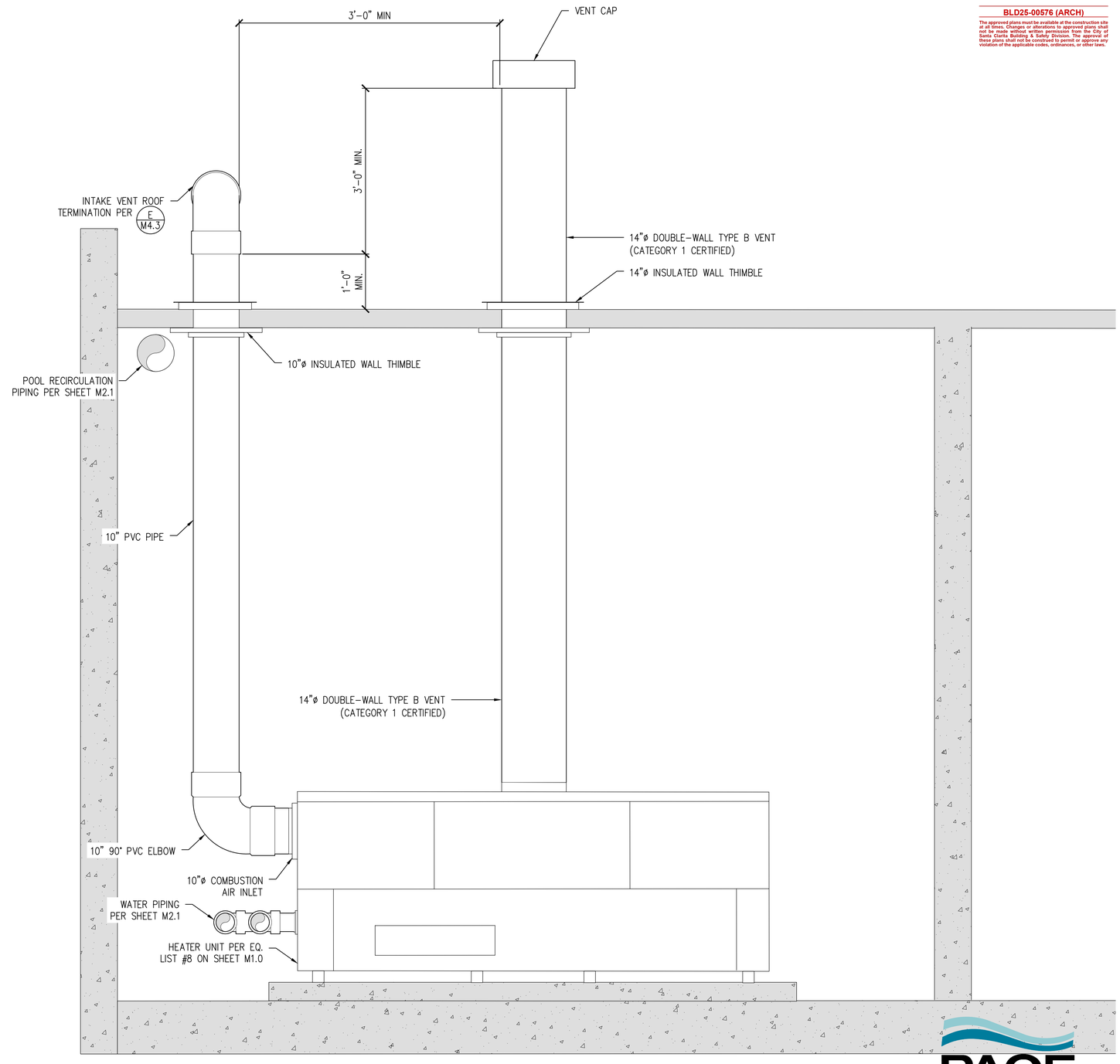

D HEATER VENTING DETAIL
SCALE: 1"=1'-0"

CITY OF SANTA CLARITA
BUILDING & SAFETY
APPROVED
Under SCMC Titles 18, 19, 20, 21, 24, 25
Sep 16, 2025
F. Svendsen
BLD25-00576 (ARCH)

The approved plans must be available at the construction site at all times. Changes or alterations to approved plans shall not be made without written permission from the City of Santa Clarita Building & Safety Division. The approval of these plans shall not be construed to permit or approve any violation of the applicable codes, ordinances, or other laws.

REVIEWED BY: Lisa Trujillo 09/30/2025 PM-DESIGN EXECUTION DATE

REVIEWED BY: Vincent Hernandez 09/30/2025 PM-CONSTRUCTION EXECUTION DATE

IN ACCORDANCE WITH RESOLUTION No. 19-6, AS A RESOLUTION OF THE CITY COUNCIL OF THE CITY OF SANTA CLARITA DELEGATING DISCRETIONARY AUTHORITY TO THE DIRECTOR OF PUBLIC WORKS, DIRECTOR OF RECREATION AND COMMUNITY SERVICES, DIRECTOR OF NEIGHBORHOOD SERVICES, CITY ENGINEER, AND ASSISTANT CITY ENGINEERS TO APPROVE PLANS AND DESIGNS FOR THE CONSTRUCTION OF OR IMPROVEMENTS TO PUBLIC PROPERTY FOR PURPOSES OF DESIGN IMMUNITY PURSUANT TO GOVERNMENT CODE SECTION 830.6 FOR THE CITY OF SANTA CLARITA, I DO HEREBY EXERCISE THE DISCRETION DELEGATED TO ME AND APPROVE THE PLAN OR DESIGN, OR AMENDMENT OR MODIFICATION TO THE PLAN OR DESIGN, OR A CONSTRUCTION OF, OR AN IMPROVEMENT TO THE PUBLIC FACILITY, STRUCTURE, OR PROPERTY TO WHICH THIS STATEMENT, MY SIGNATURE AND DATE IS AFFIXED.

100% CD FOR REVIEW

LICENSED ARCHITECT GRAHAM JAHAN PANAHI C-28045 EXP. DEC.31, 2025 STATE OF CALIFORNIA

PREPARED BY ZIRANG SONG
PROJECT ENGINEER
R.C.E. NO. --- # 69315
EXP. 06/30/2026
DRAWN J.P
SCALE
DESIGNED J.P
CHECKED Z.S
DATE 03/2025

TITLE
PUMP ROOM DETAILS

C258
NEWHALL PARK POOL
PUMP ROOM RENOVATION PLANS (100% CD)
SANTA CLARITA CA

SHEET
M4.3
39 OF 61 SHEETS

JOB NO. C258

PACE
Advanced Water Engineering
17520 Newhope Street, Suite 200 | Fountain Valley, CA 92708
P: (714) 481-7300 | www.pacewater.com

Docusign Envelope ID: F28B5F90-222C-42A7-9ED1-4686985403 61
Xrefs: DETAIL.dwg; C258 Titleblock.dwg
Dimscale = 1; LTscale = 1; PSltscale = 1; ACAD Ver. = 23.0s (LMS Tech); Visretain = 1
r:\C258\engineering\c258-04 (100% cd)\sheets\C258-04 M4.3 PUMP ROOM DETAILS.dwg - Tab: 39 - by jpenderghast on 09/29/25 at 4:23:02 PM

Sep. 29, 2025

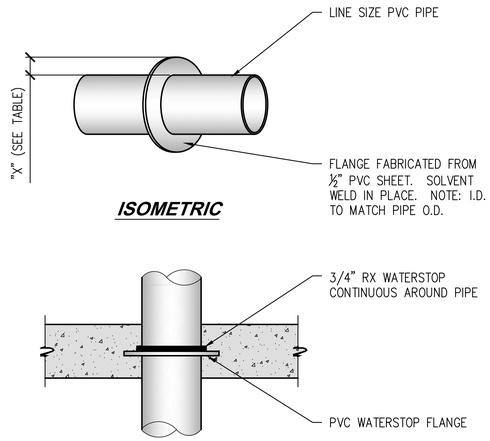

PIPE SIZE	"X"
6" ø ABOVE	3"
3" TO 5"	2"
BELOW 3"	1.5"

E PVC WATERSTOP FLANGE
SCALE: NTS

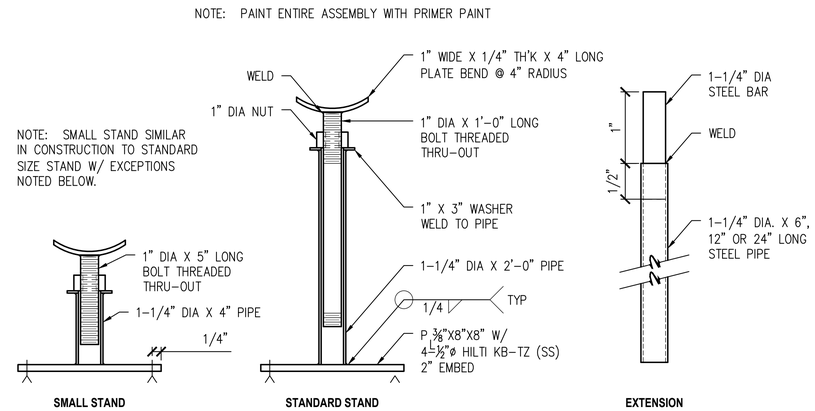

PIPE STAND 10" OR SMALLER

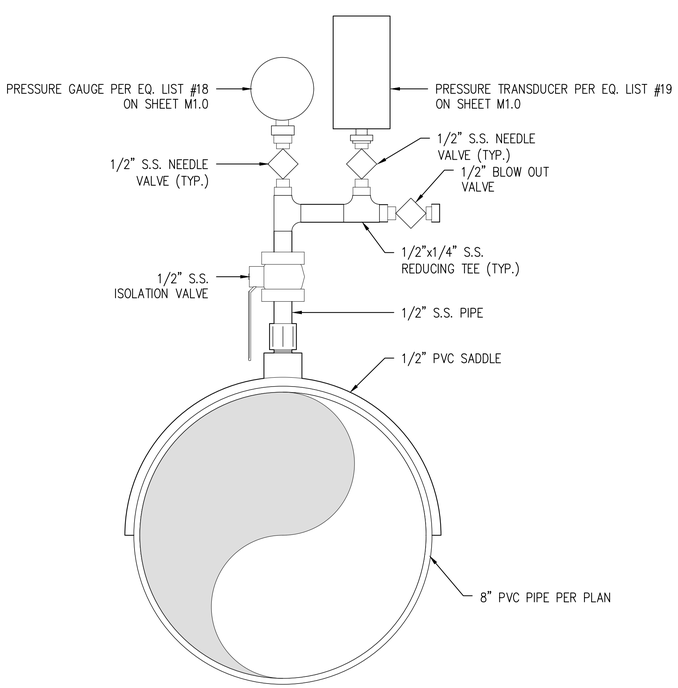

F PRESSURE GUAGE AND TRANSDUCER DETAIL
SCALE: 1"=1'-0"

PVC PIPE SIZE	MAX. HANGING LOAD RATING (LBS)	STRUT SPACING	"HILTI" KWIKBOLT MODEL #	DIAMETER AND EMBED
3/8" TO 1/2"	400	4'-0"	KB-TZ (SS)	3/8"ø, 2"
3/4" TO 1 1/4"	600	4'-5"	KB-TZ (SS)	3/8"ø, 2"
1 1/2" TO 3"	800	5'-3/4"	KB-TZ (SS)	1/2"ø, 2"
3 1/2" TO 5"	1000	8'-1/4"	KB-TZ (SS)	1/2"ø, 3 1/4"
6" TO 12"	1000	10'-0"	KB-TZ (SS)	1/2"ø, 3 1/4"

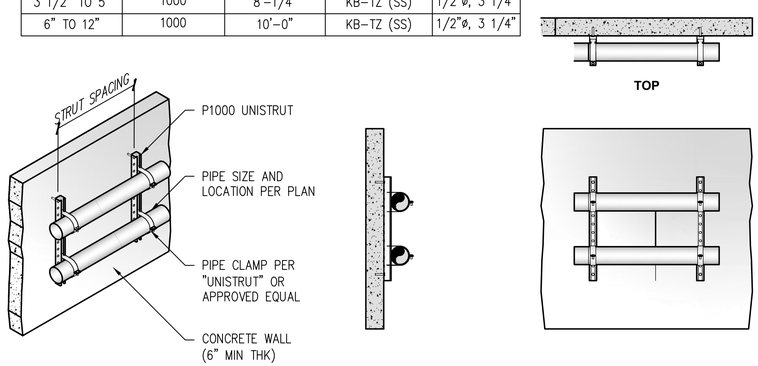

PIPE SUPPORT AT WALL

D PIPE SUPPORT
SCALE: NTS

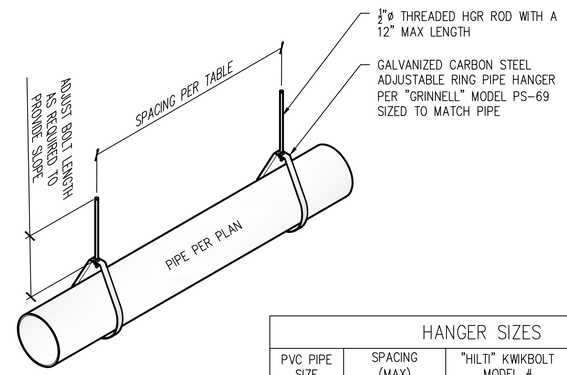

NOTE: ATTACH EXPANSION ANCHORS INTO A CONCRETE SLAB WITH A 6" MINIMUM THICKNESS OR INTO A 3¼" CONCRETE OVER A 3" METAL DECK.

HANGER SIZES			
PVC PIPE SIZE	SPACING (MAX)	"HILTI" KWIKBOLT MODEL #	DIAMETER AND EMBED
1/2"to 2"	2'-6"	kb-tz2 (ss)	3/8"ø, 2"
2"	4'-6"	kb-tz2 (ss)	1/2"ø, 2"
3"	5'-0"	kb-tz2 (ss)	1/2"ø, 2"
4"	6'-0"	kb-tz2 (ss)	1/2"ø, 3 1/4"
6"	6'-6"	kb-tz2 (ss)	1/2"ø, 3 1/4"
8"	7'-6"	kb-tz2 (ss)	1/2"ø, 3 1/4"

PIPE HANGER

CITY OF SANTA CLARITA
BUILDING & SAFETY
APPROVED
Under SCMC Titles 18, 19, 20, 21, 24, 25
Sep 16, 2025
F. Svendsen
BLD25-00576 (ARCH)
The approved plans must be available at the construction site at all times. Change or alterations to approved plans shall not be made without written approval from the City of Santa Clarita Building & Safety Division. The approval of these plans shall not be construed to permit or approve any violation of the applicable codes, ordinances, or other laws.

PACE
Advanced Water Engineering
17520 Newhope Street, Suite 200 | Fountain Valley, CA 92708
P: (714) 481-7300 | www.pacewater.com

REVIEWED BY:	EXECUTION DATE
Luis Trujillo PM - DESIGN	09/30/2025
Z.S. PM - CONSTRUCTION	09/30/2025

IN ACCORDANCE WITH RESOLUTION No. 19-6, AS A RESOLUTION OF THE CITY COUNCIL OF THE CITY OF SANTA CLARITA DELEGATING DISCRETIONARY AUTHORITY TO THE DIRECTOR OF PARKS, RECREATION AND COMMUNITY SERVICES, DIRECTOR OF PUBLIC WORKS, CITY ENGINEER, AND ASSISTANT CITY ENGINEERS TO APPROVE PLANS AND DESIGNS FOR THE CONSTRUCTION OF OR IMPROVEMENTS TO PUBLIC PROPERTY FOR PURPOSES OF DESIGN IMMUNITY PURSUANT TO GOVERNMENT CODE SECTION 830.6 FOR THE CITY OF SANTA CLARITA, I DO HEREBY EXERCISE THE DISCRETION VESTED IN ME AND APPROVE THE PLAN OR DESIGN, OR AMENDMENT OR MODIFICATION TO THE PLAN OR DESIGN, OR A CONSTRUCTION OF, OR AN IMPROVEMENT TO THE PUBLIC FACILITY, STRUCTURE, OR PROPERTY TO WHICH THIS STATEMENT, MY SIGNATURE AND DATE IS AFFIXED.

100% CD FOR REVIEW

LICENSED ARCHITECT — ZIRANG SONG — No. C-30946 — Exp. DEC. 31, 2026 — STATE OF CALIFORNIA

PREPARED BY
ZIRANG SONG
PROJECT ENGINEER
R.C.E. NO. # 69515
EXP: 06/30/2026

DRAWN	SCALE
J.P	
DESIGNED	
J.P	
CHECKED	DATE
Z.S	03/2025

TITLE
PUMP ROOM DETAILS

C258
NEWHALL PARK POOL
PUMP ROOM RENOVATION
PLANS (100% CD)
SANTA CLARITA CA

SHEET
M4.4
40 OF 61 SHEETS

JOB NO. C258

Docusign Envelope ID: F28B5F90-223C-42A7-9ED1-4886B9540361
Xrefs: C258 Titleblock.dwg; DETAIL.dwg
Dimscale = 1, LTscale = 1, PSltscale = 1; ACAD Ver. = 23.0s (LMS Tech); Viewton = 1
c:\c258\engineering\c258-04 (100% cd)\sheets\C258-04 M4.4 PUMP ROOM DETAILS.dwg - Tab: 40 - by jpenderghast on 09/29/25 at 4:22:56 PM

Sep. 29, 2025

ELECTRICAL GENERAL NOTES:

1. ELECTRICAL WORK SHALL COMPLY WITH THE NATIONAL ELECTRICAL CODE (2020 NEC) AS AMENDED BY THE CALIFORNIA ELECTRICAL CODE (2022 CEC), CALIFORNIA ENERGY CODE TITLE 24 (2022 CEnC), CALIFORNIA BUILDING CODE (2022 CBC) AND THE CITY OF SANTA CLARITA MUNICIPAL CODE.
2. ALL WORK SHALL BE DONE IN A NEAT, WORKMANLIKE, FINISHED AND SAFE MANNER, ACCORDING TO THE LATEST PUBLISHED NATIONAL ELECTRICAL CONTRACTORS ASSOCIATION STANDARDS OF INSTALLATION, UNDER COMPETENT SUPERVISION.
3. CONTRACTOR SHALL VISIT THE SITE PRIOR TO CONSTRUCTION TO BECOME FAMILIAR WITH EXISTING CONDITIONS AND ALL OTHER FACTORS WHICH MAY AFFECT THE EXECUTION OF THIS WORK.
4. CONTRACTOR SHALL BE RESPONSIBLE FOR DAMAGE TO EXISTING WALKS, PARKING SPOTS, WALLS, DRIVEWAYS, CURBS, LANDSCAPE, TREES, IRRIGATION, ETC. DAMAGES SHALL BE REPAIRED BY THE CONTRACTOR TO THE SATISFACTION OF THE OWNER AT NO ADDITIONAL COST TO THE OWNER.
5. CONTRACTOR SHALL PAY FOR LOCAL FEES, PERMITS AND INSPECTIONS AS MAY BE REQUIRED AND PROVIDE A CERTIFICATE OF INSPECTION TO THE CITY.
6. LEAVE THE SITE CLEAN, REMOVE ALL DEBRIS, EMPTY CARTONS, TOOLS, CONDUIT, WIRE SCRAPS AND ALL MISCELLANEOUS SPARE EQUIPMENT AND MATERIALS USED IN THE WORK DURING CONSTRUCTION.
7. IT IS THE OBLIGATION OF THE CONTRACTOR TO ORGANIZE HIS WORK SO THAT A COMPLETE ELECTRICAL, INSTRUMENTATION, AND CONTROL SYSTEM FOR THE FACILITY WILL BE PROVIDED AND SUPPORTED BY ACCURATE SHOP AND RECORD DRAWINGS, AND ALL O & M MANUALS.
8. ALL CABLES SHALL BE NEW, COPPER, RATED FOR 600V AND LISTED FOR ITS LOCATION WITH A MINIMUM TEMPERATURE RATING OF 90 DEG. C.; POWER CABLES SHALL BE TYPE XHHW-2 UNLESS NOTED OTHERWISE.
9. MINIMUM SIZE CONDUIT ABOVE GROUND SHALL BE 3/4". MINIMUM SIZE CONDUIT BELOW GROUND SHALL BE 1" UNLESS NOTED OTHERWISE. ALL CONDUITS FOR POWER AND LIGHTING SHALL CONTAIN A PROPERLY SIZED GROUNDING CONDUCTOR.
10. MINIMUM SIZE POWER CONDUCTORS SHALL BE #12 AWG UNLESS NOTED OTHERWISE.
11. ALL WIRE TERMINATIONS SHALL HAVE A MINIMUM TEMPERATURE RATING OF 75 DEG C, AS SUCH, WIRE AMPACITIES ARE CALCULATED ON 75 DEG C RATINGS.
12. CONDUIT SIZE SHALL BE AS SPECIFIED IN THE PLANS OR DETAILS. UNDERGROUND CONDUIT SHALL BE PVC COATED GRS, ENCASED IN CONCRETE, MINIMUM 24" BELOW GROUND. ABOVE-GROUND CONDUIT SHALL BE PVC COATED GALVANIZED RIGID STEEL (RMC).
13. GROUND AND BOND ALL EQUIPMENT AND ENCLOSURES PER NEC ARTICLE 250 AND MANUFACTURER REQUIREMENTS.
14. CONTRACTOR SHALL PLAN AND INSTALL WORK IN SUCH A MANNER AS TO CONFORM TO THE STRUCTURE, AVOID OBSTRUCTIONS, PRESERVE HEADROOM AND KEEP OPENINGS AND PASSAGEWAYS CLEAR.
15. CONTRACTOR SHALL PROVIDE ALL LABOR, MATERIAL, ETC. NECESSARY FOR A COMPLETE AND WORKABLE ELECTRICAL SYSTEM WHETHER OR NOT THESE ITEMS ARE SPECIFICALLY NOTED ON THESE DRAWINGS. INCIDENTAL ITEMS NOT INDICATED ON THE DRAWINGS, NOR MENTIONED IN SPECIFICATIONS THAT CAN BE LEGITIMATELY AND REASONABLY INFERRED TO BELONG TO THE WORK DESCRIBED OR BE NECESSARY IN GOOD PRACTICE TO PROVIDE A COMPLETE SYSTEM, SHALL BE FURNISHED AND INSTALLED AS THOUGH ITEMIZED HERE IN EVERY DETAIL.
16. ALL TRENCHING, CONDUITS, ETC. SHALL BE ROUTED AND INSTALLED IN SUCH A MANNER THAT WILL NOT DAMAGE EXISTING FACILITIES OR UNDERGROUND UTILITIES. SHOULD DAMAGE OCCUR, IT WILL BE THE CONTRACTORS RESPONSIBILITY TO REPAIR DAMAGE TO THE SATISFACTION OF THE OWNER OR INSPECTOR.
17. ALL CONDUIT RUNS SHOWN ON THIS PLAN ARE SCHEMATIC IN NATURE. THE CONTRACTOR SHALL MAKE SURE THAT ALL CONDUIT INSTALLATIONS MEETS LOCAL AND STATE CODES.
18. WHEN CROSSING PATHWAYS OR SIDEWALKS, CONTRACTOR SHALL BORE UNDER EXISTING CONCRETE WALKS AND SAWCUT ASPHALT WALKS. ASPHALT WALKS AND CONCRETE SIDEWALKS TO BE REPLACED IN KIND.
19. CONTRACTOR SHALL GUARANTEE WORK INSTALLED UNDER THE CONTRACT TO BE FREE FROM DEFECTIVE WORKMANSHIP AND MATERIALS, USUAL WEAR EXPECTED, AND SHOULD ANY SUCH DEFECTS DEVELOP WITHIN A PERIOD OF ONE YEAR ACCEPTANCE OF THE PROJECT BY THE OWNER, THE CONTRACTOR SHALL REPAIR AND/OR REPLACE ANY DEFECTIVE ITEMS AND DAMAGE RESULTING FROM FAILURE OF THESE ITEMS, AT NO EXPENSE WHATSOEVER TO THE CITY.
20. ALL CIRCUITS SHALL BE LEGIBLY IDENTIFIED AT THE PANEL, JUNCTION BOXES AND AT ALL EQUIPMENT IN A PERMANENT MANNER (I.E. ETCHED PLATES, CONDUCTOR TAG, PERMANENT MARKER, ETC.). THE LABELING SHALL INCLUDE PANEL CIRCUIT NUMBER, "TO" AND "FROM" IDENTIFICATION, AND MARKED "SPARE" WHERE APPLICABLE.
21. CONTRACTOR SHALL TEST ELECTRICAL SYSTEM FOR SHORT CIRCUITS AND MEGGER TEST FEEDERS AND BRANCH CIRCUIT WIRING. INSURE LOW IMPEDANCE GROUND PATH SYSTEM. PERFORM HIPOT TESTING WHEN REQUIRED BY LOCAL JURISDICTION.
22. CONTRACTOR SHALL COORDINATE ALL EQUIPMENT CONNECTIONS WITH EQUIPMENT SUPPLIER PRIOR TO ROUGH-IN. PROVIDE ADDITIONAL FUSED DISCONNECT SWITCHES AND CONTROLS IF OVERCURRENT PROTECTION OR CONTROLS IS NOT INTEGRAL WITH UNITS.
23. FULL LOAD AMPS (FLA) SIZES, AS NOTED IN THESE DRAWINGS, ARE BASED ON SPECIFIED EQUIPMENT DATA. CONTRACTOR SHALL VERIFY NAMEPLATE FLA OF EQUIPMENT SUPPLIED AND COORDINATE ACCORDINGLY PER EQUIPMENT SUPPLIERS RECOMMENDATIONS AND CODE REQUIREMENTS.
24. CONDUITS OR RACEWAYS INSTALLED IN AREAS WHERE ELEVATION CHANGES MAY CAUSE WATER OR MOISTURE TO ENTER THE ELECTRICAL EQUIPMENT THROUGH THE CONDUIT SHALL BE SEALED WITH A HERMETIC CONDUIT SEAL AT BOTH ENDS OF THE CONDUIT OR RACEWAY.
25. MATERIALS SHALL BE NEW AND OF THE BEST QUALITY WITH MANUFACTURER'S NAME PRINTED THEREON. MATERIALS SHALL BE MANUFACTURED IN ACCORDANCE WITH NEMA, ANSI, UNDERWRITER'S LABORATORY OR OTHER APPLICABLE STANDARDS AND RATED FOR HEAVY DUTY SERVICE.
26. SELECTION OF MATERIALS SHALL BE IN STRICT ACCORDANCE WITH THE DRAWINGS AND/OR SPECIFICATIONS.
27. THE SUBMITTALS SHALL BE NEATLY GROUPED AND ORGANIZED. PERTINENT INFORMATION SHALL BE HIGHLIGHTED, AND THE SPECIFIC PRODUCT SHALL BE IDENTIFIED. ALL SUBMITTALS SHALL BE COMPLETE, AND PRESENTED IN ONE PACKAGE. THE SUBMITTAL SHALL INCLUDE A COMPLETE LIST OF THE EQUIPMENT AND MATERIALS, INCLUDING THE MANUFACTURER'S NAME, PRODUCT SPECIFICATION, DESCRIPTIVE DATA, TECHNICAL LITERATURE, PERFORMANCE CHARTS, CATALOG CUTS, INSTALLATION INSTRUCTION, AND SPARE PART RECOMMENDATIONS FOR EACH DIFFERENT ITEM OF THE EQUIPMENT SPECIFIED.
28. VERIFY ALL CONDUIT FILL RATIOS, BOX FILLS, AND CONDUIT BENDS (MAX 360 DEGREES) ARE MET PER NEC REQUIREMENTS. INSTALL PULL BOXES AND DE-RATE CABLE AMPACITY AS NECESSARY.
29. CONTRACTOR TO READ ALL THE DRAWINGS IN THIS SET TO BECOME FAMILIARIZED WITH THE FULL ELECTRICAL SCOPE, INCLUDING BUT NOT LIMITED TO THE MECHANICAL AND CIVIL DRAWINGS.
30. THESE DRAWINGS AND THE PROJECT SPECIFICATIONS ARE COMPLEMENTARY. WHERE OVERLAP, THE MORE STRINGENT REQUIREMENT WILL TAKE PRECEDENCE.
31. CONTRACTOR SHALL VERIFY ALL CIRCUITS CONTAIN LESS THAN 5% VOLTAGE DROP. CONTRACTOR SHALL PROVIDE SHORT CIRCUIT ANALYSIS AND ARC FLASH STUDY, AS REQUIRED.
32. CONTRACTOR SHALL COORDINATE AND PERFORM WORK TO THE STANDARDS OF ALL APPLICABLE UTILITY COMPANIES, INCLUDING BUT NOT LIMITED TO UNDERGROUND ELECTRICAL LINES, GAS LINES AND WATER LINES. WHEN AN ISSUE OR DISCREPANCY ARISES, NOTIFY THE CUSTOMER AND ENGINEER IMMEDIATELY.
33. CONTRACTOR SHALL NOTIFY THE ENGINEER AND CUSTOMER WITH ANY DISCREPANCIES FOUND DURING INSTALLATION OR REVIEW.
34. EQUIPMENT AND WIRING METHODS IN THE CHEMICAL ROOMS SHALL BE RATED FOR CORROSIVE ENVIRONMENTS. ENCLOSURES INSIDE THESE ROOMS SHALL BE NEMA 4X UNLESS NOTED OTHERWISE. EQUIPMENT INSIDE THE PUMP ROOM SHALL BE NEMA 12, OUTDOOR EQUIPMENT SHALL BE NEMA 3R UNLESS NOTED OTHERWISE.
35. CONTRACTOR TO PROVIDE REQUIREMENTS FOR NFPA 70E, AS REQUIRED.

38. ALL 120V RECEPTACLES SHALL BE GFCI PROTECTED, EITHER WITH A GFCI RECEPTACLE OR THROUGH A GFCI CIRCUIT BREAKER.
39. ELECTRICAL EQUIPMENT INCLUDING, BUT NOT LIMITED TO, ELECTRICAL SERVICE EQUIPMENT, MCC AND DISTRIBUTION TRANSFORMERS – PANELBOARDS SHALL BE SEISMIC-CERTIFIED AND ANCHORED ACCORDING TO EQUIPMENT MANUFACTURER'S INSTALLATION INSTRUCTIONS. [CEC 110.3(B), 110.13(A), CBC 1613.1, 1705.12.6 ASCE 7-16, CHAPTER 13].

CITY OF SANTA CLARITA
BUILDING & SAFETY
APPROVED
Under SCMC Titles 18, 19, 20, 21, 24, 25
Sep 16, 2025
F. Svendsen
BLD25-00576 (ARCH)
The approved plans must be available at the construction site at all times. Changes or alterations to approved plans shall not be made without written permission from the City of Santa Clarita Building & Safety Division. The approval of these plans shall not be construed to permit or approve any violation of the applicable codes, ordinances, or other laws.

PACE
Advanced Water Engineering
17520 Newhope Street, Suite 200 | Fountain Valley, CA 92708
P: (714) 481-7300 | www.pacewater.com

REVIEWED BY: katie kusulul — PM - DESIGN — 09/30/2025 EXECUTION DATE
REVIEWED BY: [signature] — PM - CONSTRUCTION — 09/30/2025 EXECUTION DATE

IN ACCORDANCE WITH RESOLUTION No. 19-6, AS A RESOLUTION OF THE CITY COUNCIL OF THE CITY OF SANTA CLARITA DELEGATING DISCRETIONARY AUTHORITY TO THE DIRECTOR OF PUBLIC WORKS, DIRECTOR OF RECREATION AND COMMUNITY SERVICES, DIRECTOR OF NEIGHBORHOOD SERVICES, CITY ENGINEER, AND ASSISTANT CITY ENGINEERS TO APPROVE PLANS AND DESIGNS FOR THE CONSTRUCTION OF OR IMPROVEMENTS TO PUBLIC PROPERTY FOR PURPOSES OF DESIGN IMMUNITY PURSUANT TO GOVERNMENT CODE SECTION 830.6 FOR THE CITY OF SANTA CLARITA, I DO HEREBY EXERCISE THE DISCRETION DELEGATED TO ME AND APPROVE THE PLAN OR DESIGN, OR AMENDMENT OR MODIFICATION TO THE PLAN OR DESIGN, OR A CONSTRUCTION OF, OR AN IMPROVEMENT TO THE PUBLIC FACILITY, STRUCTURE, OR PROPERTY TO WHICH THIS STATEMENT, MY SIGNATURE AND DATE IS AFFIXED.

LICENSED PROFESSIONAL ENGINEER — BASHAR MATE ISHAQ — E 24590 — EXP. 06/30/27 — ELECTRICAL — STATE OF CALIFORNIA

PREPARED BY ZIRANG SONG, PROJECT ENGINEER
R.C.E. NO. -- # 69315
EXP. 06/30/2026

DRAWN	DESIGNED	CHECKED	SCALE	DATE
J.P	J.P	Z.S		03/2025

TITLE: GENERAL NOTES

C258
NEWHALL PARK POOL
PUMP ROOM RENOVATION
PLANS (100% CD)
SANTA CLARITA CA

SHEET E0.0
41 OF 60 SHEETS

JOB NO. C258

Docusign Envelope ID: F28B5F90-223C-42A7-9ED1-46869B54D361
Xrefs: C258 Titleblock_ELEC.dwg
Dimscale = 1; LTscale = 1; PSltscale = 1; ACAD Ver. = 23.0s (LMS Tech); Visretain = 1
R:\C258\Engineering\C258-04 (100% CD)\sheets\C258-04 E0.0.dwg - Tab: 41 - by jpenderghast on 09/29/25 at 3:52:57 PM

Sep. 29, 2025

PLAN LEGEND

- EXPOSED CONDUIT
- EXISTING EXPOSED CONDUIT
- CONDUIT WITHIN CEILING, FLOOR, WALLS, OR UNDERGROUND
- EXIST. CONDUIT WITHIN CEILING, FLOOR, WALLS, OR UNDERGROUND
- GROUNDING ELECTRODE CONDUCTOR
- OHE — EXISTING OVERHEAD ELECTRIC
- CONDUIT BEND UP
- CONDUIT BEND DOWN
- FENCE
- FLOOR MOUNTED ETHERNET (10/100) OUTLET (RJ-45)
- TELEPHONE OUTLET (RJ-11)
- ETHERNET (10/100) OUTLET (RJ-45)
- COMBINATION TELEPHONE/ETHERNET (10/100) OUTLET (RJ-11 & RJ-45)
- 20 — 240V SIMPLEX RECEPTACLE (NUMBER DENOTES CIRCUIT AMPS)
- 20 — 480V SIMPLEX RECEPTACLE (NUMBER DENOTES CIRCUIT AMPS)
- 120V, 20A SIMPLEX RECEPTACLE
- 120V, 20A DUPLEX RECEPTACLE
- 120V, 20A QUADRAPLEX RECEPTACLE
- $ — 120V, 20A SPST SWITCH
- $M — MANUAL MOTOR STARTER
- $3 — 120V, 20A 3-WAY SWITCH
- $4 — 120V, 20A 4-WAY SWITCH
- AT — ANALYZER TRANSMITTER
- CS — CONDUCTIVITY SWITCH
- FS — FLOAT SWITCH
- J — ABOVE GROUND JUNCTION BOX
- LE — LEVEL ELEMENT
- LP — LEVEL PROBES
- LT — LEVEL TRANSPONDER
- PC — PHOTOCELL
- PS — PRESSURE SWITCH
- TS — TEMPERATURE SWITCH
- T — THERMOSTAT
- ZS — INTRUSION ALARM SWITCH
- JB — UNDERGROUND JUNCTION BOX
- MH — MANHOLE
- HH — HANDHOLE
- DISCONNECT SWITCH
- F — FUSED DISCONNECT SWITCH
- CB — ENCLOSED CIRCUIT BREAKER
- COMBINATION MOTOR STARTER
- MOTOR STARTER
- PUSHBUTTON CONTROL STATION
- CONDUIT SEAL-OFF FITTING
- S — SOLENOID VALVE (ENERGIZED TO CLOSE)
- S — SOLENOID VALVE (ENERGIZED TO OPEN)
- BUTTERFLY VALVE
- PLUG VALVE
- GATE VALVE
- R — ALARM BEACON
- H — HORN

SINGLE LINE DIAGRAM AND SCHEMATIC LEGEND

- FIELD WIRING
- PANEL WIRING
- COMMUNICATIONS WIRING
- CABLE (MULTICONDUTOR SHIELDED)
- R — PILOT LIGHT (LETTER DENOTES COLOR)
- R — PUSH-TO-TEST PILOT LIGHT (LETTER DENOTES COLOR)
- CR — CONTROL RELAY
- PRESSURE SWITCH (N.O.) CLOSES ON RISING LEVEL
- PRESSURE SWITCH (N.C.) OPENS ON RISING LEVEL
- TIMING RELAY, (N.O.) CONTACT TIME TO CLOSE (ON DELAY TIMER)
- TIMING RELAY, (N.C.) CONTACT TIME TO OPEN (ON DELAY TIMER)
- TIMING RELAY, (N.O.) CONTACT TIME TO OPEN (OFF DELAY TIMER)
- TIMING RELAY, (N.C.) CONTACT TIME TO CLOSE (OFF DELAY TIMER)
- FLOW SWITCH (N.O.) CLOSES ON RISING LEVEL
- FLOW SWITCH (N.C.) OPENS ON RISING LEVEL
- FLOAT SWITCH (N.C.) OPENS ON RISING LEVEL
- FLOAT SWITCH (N.O.) CLOSES ON RISING LEVEL
- LIMIT SWITCH (N.C.)
- LIMIT SWITCH (N.O.)
- LIMIT SWITCH (N.C.)
- LIMIT SWITCH (N.O.)
- TEMPERATURE SWITCH (N.C.) OPENS ON RISING LEVEL
- TEMPERATURE SWITCH (N.O.) CLOSES ON RISING LEVEL
- CIRCUIT BREAKER WITH DOOR OPERATED HANDLE
- CIRCUIT BREAKER
- CONTACT (N.O.)
- CONTACT (N.C.)
- PUSHBUTTON (N.O.) MOMENTARY CLOSE
- PUSHBUTTON (N.C.) MOMENTARY OPEN
- 2-POSITION SELECTOR SWITCH
- H O A — 3-POSITION SELECTOR SWITCH (HAND-OFF-AUTO)
- LO STOP — LOCKOUT STOP PUSHBUTTON
- PUSH-PULL EMERGENCY STOP PUSHBUTTON
- DISCONNECT SWITCH (N.O.)
- DISCONNECT SWITCH (N.C.)
- EARTH GROUND CONNECTION
- GROUND ROD AND WELL
- OVERLOAD (ELECTRONIC TYPE)
- THERMAL OVERLOAD (BI-METALLIC)
- FUSED TERMINAL BLOCK
- N — NEUTRAL BUS
- G — GROUND BUS
- H — HORN
- BUZZER
- TERMINAL BLOCK
- FIELD TERMINATION
- MLO — MAIN LUG ONLY
- POWER DISTRIBUTION BLOCK
- COIL/INDUCTOR
- POWER TRANSFORMER
- HEATER
- M — MOTOR STARTER CONTACTOR COIL
- ETM — ELAPSED TIME METER
- M — METER & CURRENT TRANSFORMER
- WHM — WATT HOUR METER AND SOCKET
- PFR — PHASE FAILURE RELAY
- TR XX — TIME DELAY RELAY
- LR XX — LATCHING RELAY
- CR XX — CONTROL RELAY
- ISR XX — INTRINSICALLY SAFE RELAY
- EDGE CONNECTORS
- INTERNAL CONTACT (N.O.)
- INTERNAL CONTACT (N.C.)
- BATTERY
- CAPACITOR
- RESISTOR
- DIODE
- MOV — METAL OXIDE VARISTOR
- INDICATING FUSE HOLDER AMPERE SIZE SHOWN
- S LA — LIGHTNING ARRESTER
- CXXXX — CONDUIT DESIGNATION
- EQUIPMENT TAG REFERENCE
- I/O POINT REFERENCE PLC, I/O RACK, OR ENUNCIATOR PANEL
- DRAWING REFERENCE
- LOCATION SYMBOL
- SHEET NOTE TAG
- EDGE CONNECTOR
- INSTRUMENTATION
- $ — PHOTOCELL AND TIME CLOCK
- CONDUIT STUB-UP AND CAP

ABBREVIATION LIST

A, AMP	AMPERES
AM	AMMETER
AC	ALTERNATING CURRENT
AIC	AMPS INTERRUPTING CAPACITY
BAT	BATTERY BC BATTERY CHARGER
C	COMMON
CB	CIRCUIT BREAKER
CNTL	CONTROL
CPT	CONTROL POWER TRANSFORMER
CP	CONTROL PANEL
CR	CONTROL RELAY
CT	CURRENT TRANSFORMER
DC	DIRECT CURRENT
DR	DUPLEX RECEPTACLE
(E)	EXISTING
EC	EDGE CONNECTOR
EF	EXHAUST FAN
ETM	ELAPSED TIME METER
F	FUSE
FB	FUSE BLOCK
(F)	FUTURE
FLTR	FILTER
FS	FLOAT SWITCH
FVNR	FULL VOLTAGE NON REVERSING
FVR	FULL VOLTAGE REVERSING
G, GND	GROUND
GFCI	GROUND FAULT CIRCUIT INTERRUPTER
HPS	HIGH PRESSURE SODIUM
HS	HAND SWITCH
HTR	HEATER
ICP	INSTRUMENTATION CONTROL PANEL
ISR	INTRINSICALLY SAFE RELAY
I, IND	INDICATOR
INST	INSTANTANEOUS
KV	KILOVOLT
KVA	KILOVOLT AMPERES
KW	KILOWATT
LED	LIGHT EMITTING DIODE
LCD	LIQUID CRYSTAL DISPLAY
LA	LIGHTNING ARRESTER
LCP	LOCAL CONTROL PANEL
LPU	LIGHTNING PROTECTION UNIT
LOS	LOCK OUT STOP
LR	LATCH RELAY
LS	LOAD SPLITTER
MA	MILLIAMPERES
MB	MAIN BREAKER
MCC	MOTOR CONTROL CENTER
MCP	MOTOR CIRCUIT PROTECTOR
MOT	MOTOR OVERTEMPERATURE
MMS	MOTOR MOISTURE SENSOR
MS	MOTOR STARTER
N	NEUTRAL
NA	NON AUTOMATIC
(N)	NEW
N.I.C.	NOT IN CONTRACT
NP	NAMEPLATE
OT	OVERTEMPERATURE
O/L	OVERLOAD DEVICE
PB	PUSHBUTTON
PCB	PRINTED CIRCUIT BOARD
PC	PROGRAMMABLE CONTROLLER
PLC	PROGRAMMABLE LOGIC CONTROLLER
PL-1	PILOT LIGHT 1
PFR	PHASE/POWER FAIL RELAY
PNL	PANEL
POT	POTENTIOMETER
PPM	POWER PHASE MONITOR
PR	PAIR CABLE
PS	PRESSURE SWITCH
PT	POTENTIAL TRANSFORMER
PTT	PUSH TO TEST
PVC	POLYVINYL CHLORIDE
PWR	POWER
RR	RUN RELAY
RV	REDUCED VOLTAGE
RVAT	REDUCED VOLTAGE AUTO-TRANSFORMER
SSS	SOLID-STATE STARTER
SR	SIMPLEX RECEPTACLE
SS	SELECTOR SWITCH, SOFT STARTER
SP	SURGE PROTECTOR
SPD	SURGE PROTECTOR DEVICE
SV	SOLENOID VALVE
SWBD	SWITCHBOARD
TB	TERMINAL BLOCK
TR	TIME DELAY RELAY
TC	TIMECLOCK
TM	THERMAL MAGNETIC
TS	TEMPERATURE SWITCH
TSP	TWISTED SHIELDED PAIR
TWP	TWISTED PAIR
TYP	TYPICAL
UG	UNDERGROUND
V	VOLTS, VOLTAGE
VM	VOLTMETER
VFD	VARIABLE FREQUENCY DRIVE
WP	WEATHERPROOF
TR,XFMR	TRANSFORMER
XP	EXPLOSION PROOF
XMTR	TRANSMTTER

CITY OF SANTA CLARITA BUILDING & SAFETY
APPROVED
Under SCMC Titles 18, 19, 20, 21, 24, 25
Sep 16, 2025
F. Svendsen
BLD25-00576 (ARCH)
The approved plans must be available at the construction site at all times. Changes or alterations to approved plans shall not be made without written permission from the City of Santa Clarita Building & Safety Division. The approval of these plans shall not be construed to permit or approve any violation of the applicable codes, ordinances, or other laws.

PACE Advanced Water Engineering
17520 Newhope Street, Suite 200 | Fountain Valley, CA 92708
P: (714) 481-7300 | www.pacewater.com

REVIEWED BY: Luis Trejo 09/30/2025 PM - DESIGN EXECUTION DATE
REVIEWED BY: 09/30/2025 PM - CONSTRUCTION EXECUTION DATE

IN ACCORDANCE WITH RESOLUTION No. 19-6, AS A RESOLUTION OF THE CITY COUNCIL OF THE CITY OF SANTA CLARITA DELEGATING DISCRETIONARY AUTHORITY TO THE DIRECTOR OF PUBLIC WORKS, DIRECTOR OF RECREATION AND COMMUNITY SERVICES, DIRECTOR OF NEIGHBORHOOD SERVICES, OR THEIR DESIGNEES, AND CONSULTANT CITY ENGINEERS TO APPROVE PLANS AND DESIGNS FOR THE CONSTRUCTION OF OR IMPROVEMENTS TO PUBLIC PROPERTY FOR PURPOSES OF DESIGN IMMUNITY PURSUANT TO GOVERNMENT CODE SECTION 830.6 FOR THE CITY OF SANTA CLARITA, I DO HEREBY EXERCISE THE DISCRETION DELEGATED TO ME AND APPROVE THE PLAN OR DESIGN, AMENDMENT OR MODIFICATION TO THE PLAN OR DESIGN, OR A CONSTRUCTION OF, OR AN IMPROVEMENT TO THE PUBLIC FACILITY, STRUCTURE, OR PROPERTY TO WHICH THIS STATEMENT, MY SIGNATURE AND DATE IS AFFIXED.

LICENSED PROFESSIONAL ENGINEER — MASHAR WATE ISHAQ — E 24590 — EXP. 06/30/27 — ELECTRICAL — STATE OF CALIFORNIA

PREPARED BY ZIRANG SONG
PROJECT ENGINEER
R.C.E. NO. # 69315
EXP. 06/30/2026
DRAWN J.P.
SCALE
DESIGNED J.P.
CHECKED Z.S.
DATE 03/2025

TITLE
LEGEND & ABBREVIATIONS

C258
NEWHALL PARK POOL
PUMP ROOM RENOVATION
PLANS (100% CD)
SANTA CLARITA CA

SHEET E0.1
42 OF 60 SHEETS
JOB NO. C258

R:\C258\Engineering\C258-04 (100% CD)\sheets\C258-04 E01.dwg - Tab: 42 - by jpenderghast on 09/29/25 at 3:53:01 PM

Xrefs: C258 Titleblock_ELEC.dwg
Dimscale = 1, LTscale = 1, PSltscale = 1, ACAD Ver. = 23.0s (LMS Tech), Viewtem = 1

Docusign Envelope ID: F28B5F90-220C-42A7-9ED1-4B9B9540381

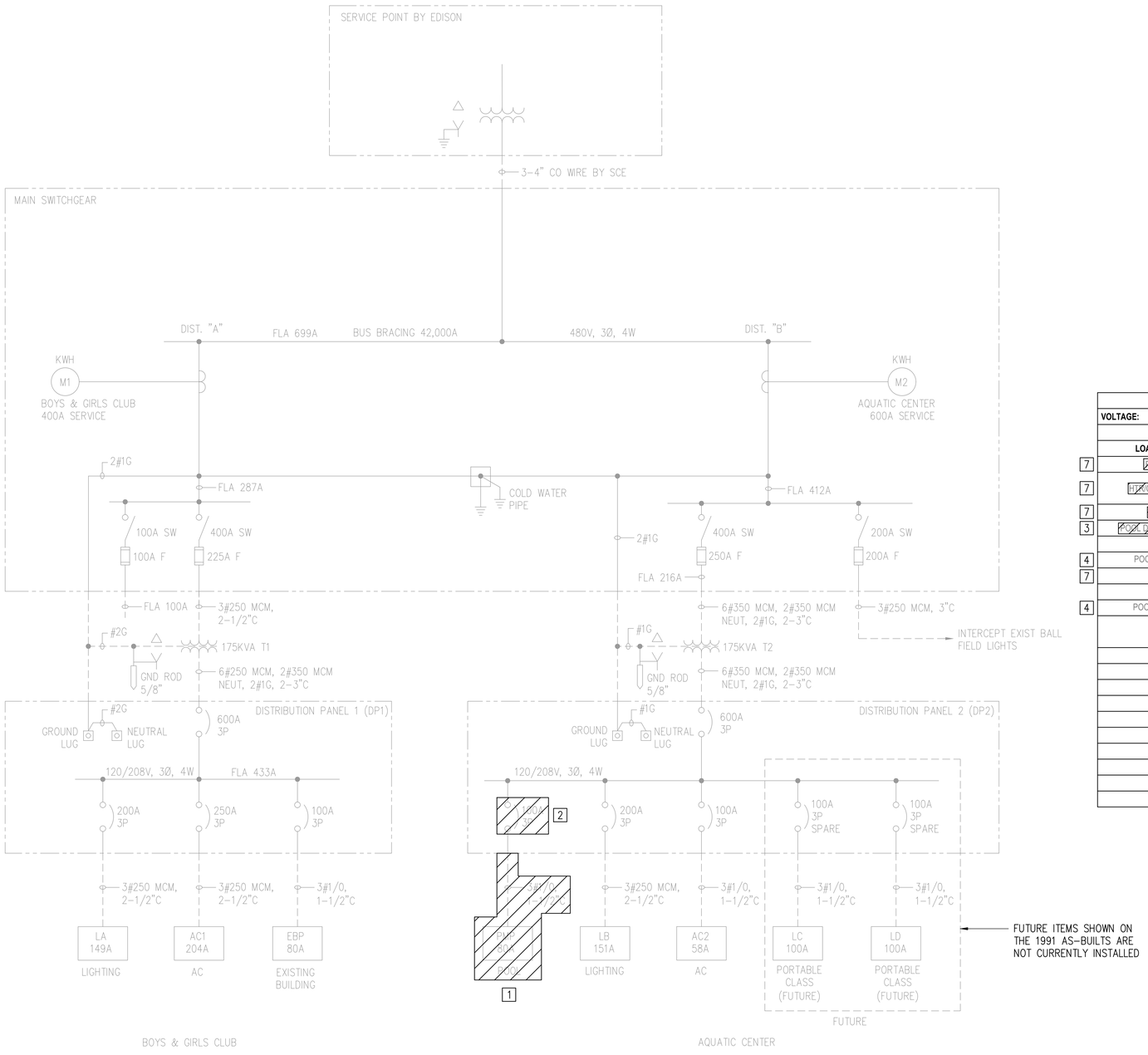

SINGLE LINE DIAGRAM DEMO
NTS

CONSTRUCTION NOTES:

1. REMOVE EXISTING PANEL "PMP" AND ASSOCIATED POWER CONDUIT/FEEDER CABLES AND DISPOSE.
2. REMOVE EXISTING CIRCUIT BREAKER AND REPLACE PER SHEET E1.0.
3. EXISTING POOL DECK LT POLE RECEPTACLES TO BE REPLACED. SEE SHT E1.0.
4. EXISTING POOL LIGHTS TO BE TRANSFERRED TO PROPOSED LIGHTING CONTROL PANEL (LCP-A).
5. EXISTING POOL DECK POLE-MTD LIGHT FIXTURES TO BE REMOVED AND REPLACED PER SHEET E2.0.
6. EXISTING SUMP PUMP TO REMAIN IN PLACE. TRANSFER TO REPLACEMENT PANEL-PMP, SEE SHT E1.0.
7. EXISTING EQUIPMENT TO BE REMOVED, SEE MECH DEMO PLANS. REMOVE ALL ANCILLARY ELECTRICAL COMPONENTS AND RETURN MAJOR ITEMS SUCH AS PANELS, CONTROLLERS, ETC. TO OWNER. DISPOSE OF MINOR ITEMS SUCH AS CONDUITS, WIRING, ETC.
8. CONTRACTOR TO VERIFY LOADS BEFORE DEMOLISHING AND NOTIFY ENGINEER OF RECORD IF ANY DISCREPENCIES FOUND.

NOTES:

1. FADED BACK ITEMS ARE EXISTING TO BE PROTECTED IN PLACE UNLESS NOTED OTHERWISE.
2. SINGLE LINE DIAGRAM HAS BEEN GENERATED FROM AS-BUILTS DATED SEPTEMBER 1991 BY DESCO ELECTRIC. CONTRACTOR TO CONFIRM AND NOTIFY ENGINEER OF RECORD IF ANY DISCREPENCIES FOUND.
3. NOT ALL ITEMS TO BE DEMO'D ARE SHOWN ON THIS SHEET. SEE REST OF PLAN SET FOR ADDITIONAL DEMO DETAILS.

1 8

EXISTING PANEL-PMP

VOLTAGE:	120/240 VAC	VOLT AMPS	MAIN BKR:	80	A
					A

	LOAD DESCRIPTION	VA	CB	BKR	PHASE A	PHASE B	BKR	CB	VA	LOAD DESCRIPTION	
7	~~POOL HEATER~~		30/1	1	0		2	20/1		~~HTR/CHEM PMP LTS~~	7
7	~~HTR/CHEM 240V RECEP~~		20/2	3		0	4	20/1		SPARE	
				5	0		6	20/1		~~PRESS PUMP~~	7
7	~~STEAM ROOM~~		20/1	7		0	8	20/1		~~HTR/CHEM PMP CTRL RECEP~~	7
3	~~POOL DECK LT POLE RECEP~~			9	0		10	20/1		~~POOL DECK LTS/LTR CKT~~	5
	SPARE		20/1	11		0	12	20/1		~~EXT BLDG LTS LT~~	7
4	POOL LIGHTS (EAST)		15/1	13	0		14	20/1		~~POOL RECEP LTS~~	5
7	~~CLR REC AV~~		20/1	15		0	16	20/1		~~POOL RECEP LTS~~	5
	SPARE		20/1	17	0		18	20/1		~~POOL RECEP LTS~~	5
4	POOL LIGHTS (WEST)		15/1	19		0	20	20/1		~~POOL RECEP LTS~~	5
	SPARE		20/2	21	0		22	20/1		~~POOL DECK LTS/LTR CKT~~	5
				23		0	24	20/1		SUMP PUMP	6
	"SPACE"			25			26	20/2		~~POOL RECEP 240V RECEP GFCI~~	7
	"SPACE"			27			28				
	"SPACE"			29			30			"SPACE"	

	PHASE A	PHASE B	
VA/PHASE (SUBTOTAL)			1Φ, 3W
AMPS/LEG (SUBTOTAL)			
VA (SUBTOTAL)			
25% OF LARGEST INDUCTIVE LOAD			
GRAND TOTAL (AMPS)			* INDICATES LOAD CALCULATED AT 125%
PERCENT CAPACITY			

CITY OF SANTA CLARITA
BUILDING & SAFETY
APPROVED
Under SCMC Titles 18, 19, 20, 21, 24, 25
Sep 16, 2025
F. Svendsen
BLD25-00576 (ARCH)
The approved plans must be available at the construction site at all times. Changes or alterations to approved plans shall not be made without written permission from the City of Santa Clarita. Approval of these plans does not permit the use of these plans shall not be construed to permit or approve any violation of the applicable codes, ordinances, or other laws.

PACE
Advanced Water Engineering
17520 Newhope Street, Suite 200 | Fountain Valley, CA 92708
P: (714) 481-7300 | www.pacewater.com

REVIEWED BY:	09/30/2025
PM/DESIGNER	EXECUTION DATE
REVIEWED BY:	09/30/2025
PM-CONSTRUCTION	EXECUTION DATE

IN ACCORDANCE WITH RESOLUTION No. 19-6, AS A RESOLUTION OF THE CITY COUNCIL OF THE CITY OF SANTA CLARITA DELEGATING DISCRETIONARY AUTHORITY TO THE DIRECTOR OF PUBLIC WORKS, DIRECTOR OF RECREATION AND COMMUNITY SERVICES, DIRECTOR OF NEIGHBORHOOD SERVICES, CITY ENGINEER, AND ASSISTANT CITY ENGINEERS TO APPROVE PLANS AND DESIGNS FOR THE CONSTRUCTION OF OR IMPROVEMENTS TO PUBLIC PROPERTY FOR PURPOSES OF DESIGN IMMUNITY PURSUANT TO GOVERNMENT CODE SECTION 830.6 FOR THE CITY OF SANTA CLARITA, I DO HEREBY EXERCISE THE DISCRETION VESTED IN ME AND APPROVE THE PLAN OR DESIGN, AMENDMENT OR MODIFICATION TO THE PLAN OR DESIGN, OR A CONSTRUCTION OF, OR AN IMPROVEMENT TO THE PUBLIC FACILITY, STRUCTURE, OR PROPERTY TO WHICH THIS STATEMENT, MY SIGNATURE AND DATE IS AFFIXED.

LICENSED PROFESSIONAL ENGINEER
NASHAR NATE ISMAIL
E 24590
EXP. 06/30/27
ELECTRICAL
STATE OF CALIFORNIA

PREPARED BY
ZIRANG SONG
R.C.E. NO. PROJECT ENGINEER
EXP: 06/30/2026 # 69315

DRAWN	SCALE	DATE
J.P.		03/2025
DESIGNED		
J.P.		
CHECKED		
Z.S.		

TITLE
SINGLE LINE DIAGRAM DEMO

C258
NEWHALL PARK POOL
PUMP ROOM RENOVATION
PLANS (100% CD)
SANTA CLARITA CA

SHEET
E1.0D
43 OF 60 SHEETS

JOB NO. C258

Sep. 29, 2025
Docusign Envelope ID: F2B85F90-229C-4247-9ED1-4B9B9B542361
Xrefs: C258 Titleblock_ELEC.dwg
Dimscale = 40; LTscale = 1; PSltscale = 1; ACAD Ver. = 23.0s (LMS Tech); Viewton = 1
R:\C258\Engineering\C258-04 (100% CD)\sheets\C258-04 E1.0D.dwg - Tab: 43 - by jsendergast on 09/29/25 at 3:53:07 PM

Sep. 29, 2025

EXISTING DISTRIBUTION PANEL 2 (DP-2) LOAD SUMMARY (600A MCB @208V)		
LOAD DESCRIPTION	CONNECTED (AMPS)	ACTIVE (AMPS)
PANEL-PMP	142.5	142.5
EXISTING PANEL-LB	151	151
EXISTING PANEL-AC2	58	58
SUBTOTAL	351.5	351.5
25% LARGEST MOTOR LOAD	11.55	11.55
GRAND TOTAL (AMPS)	363.1	363.1
% CAPACITY		60.5%

CONSTRUCTION NOTES:

1. PANELBOARD "PMP", 120/208V, 3Ø, 4W, 60 HZ, 22 KAIC, 200 A MCB/225 A BUS, EQUIPPED WITH SPD (MIN 50 KA/PH), NEMA 12, 54 CIRCUITS, WALL-MTD.
2. REPLACE EXISTING CIRCUIT BREAKER WITH 200A/3P CIRCUIT BREAKER. MATCH EXISTING TYPE.
3. SEE NOTE 3 BELOW.
4. PROVIDE LOCK-ON DEVICE FOR EXIT LIGHT CB.

NOTES:

1. FADED BACK ITEMS ARE EXISTING TO BE PROTECTED IN PLACE UNLESS NOTED OTHERWISE.
2. SINGLE LINE DIAGRAM HAS BEEN GENERATED FROM AS-BUILTS DATED SEPTEMBER 1991 BY DESCO ELECTRIC. CONTRACTOR TO CONFIRM AND NOTIFY ENGINEER OF RECORD IF ANY DESCREPENCIES FOUND.
3. EXISTING SUMP PUMP IS UNKNOWN AT THIS TIME. LOADS ARE ESTIMATED AT 80% OF THE EXISTING BREAKER SIZES.

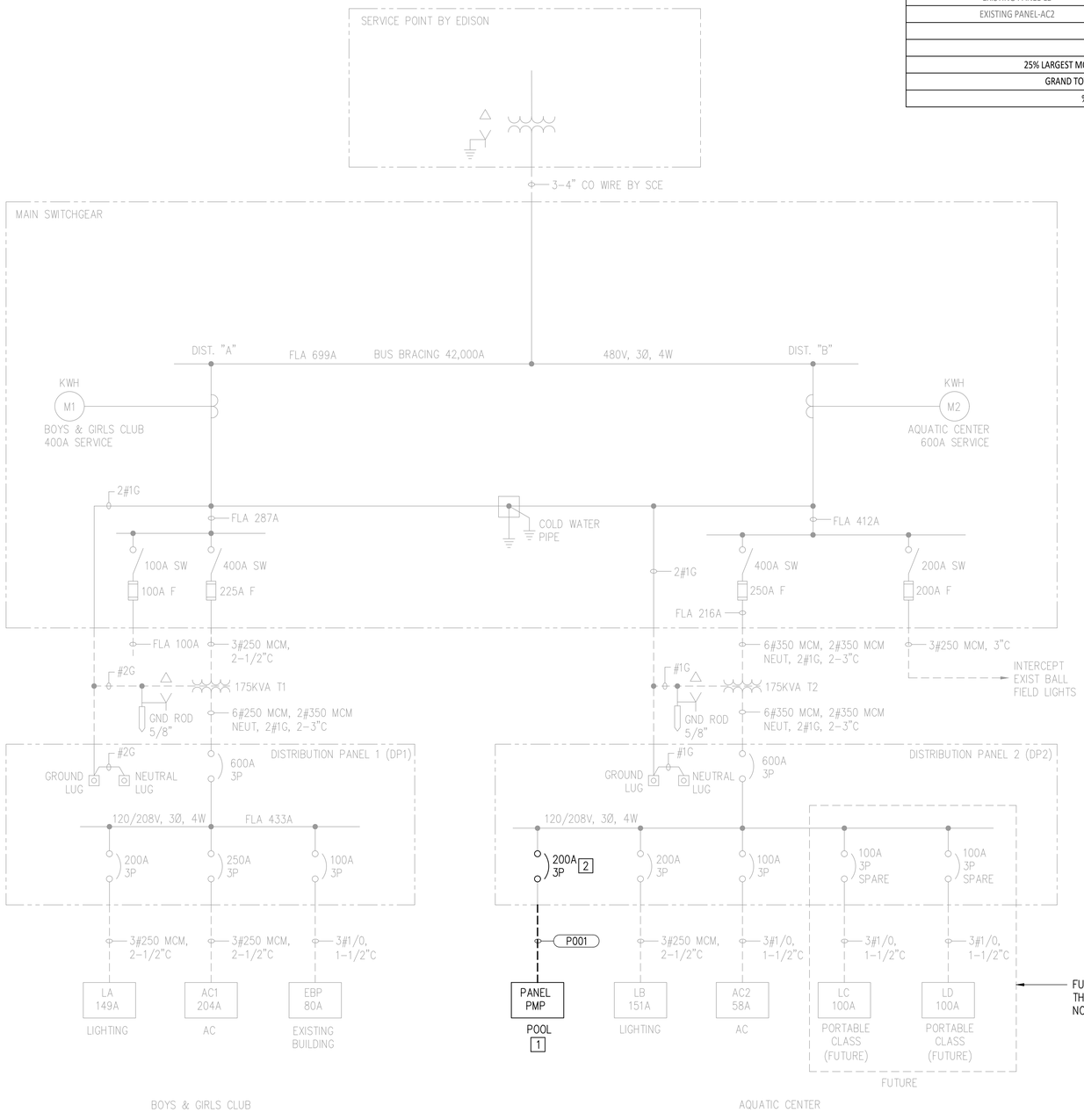

SINGLE LINE DIAGRAM PROPOSED
NTS

1

PANEL-PMP												
VOLTAGE:	120/208 VAC	VOLT AMPS									MAIN BKR:	200	A
SCCR:	22 KAIC										PANEL BUS:	225	A
LOAD DESCRIPTION		VA	CB	BKR	PHASE A	PHASE B	PHASE C	BKR	CB	VA	LOAD DESCRIPTION		
SPARE			15/1	1	5548			2	100/3	5548	VERTICAL TURBINE POOL PUMP		
RECEP - 45M5 CHM PUMP		204	15/1	3		5752		4		5548			
RECEP - 45M5 CHM PUMP		204	15/1	5			5752	6		5548			
CHEM CTLR		3900	45/1	7	5076			8	20/1	1176	PRESSURE SUSTAINING PUMP		
POOL DECK LT 1 & 2 RECEP'S		360	20/1	9		360		10	15/1		SPARE		
POOL DECK LT 3 & 4 RECEP'S		360	20/1	11			2280	12	30/1	1920	POOL HEATER PUMP		
SPARE			15/1	13	1440			14	25/1	1440	POOL HEATER		
STORAGE ROOM LTS*		188	15/1	15		538		16	15/1	350	PROCESS ROOM LTS*		
CHEM RM (WEST) LT*		31	15/1	17			1951	18	20/1	1920	EXIST SUMP PUMP		
CHEM RM (WEST-CTR) LT*		31	15/1	19	56			20	15/1	25	EXIT SIGN (PROCESS RM)*		
CHEM RM (CTR) LT*		31	15/1	21		56		22	15/1	25	EXIT SIGN (STORAGE RM)*		
CHEM RM (EAST-CTR) LT*		31	15/1	23			931	24	20/1	900	RECEP'S (CHEM RMS)		
CHEM RM (EAST) LT*		31	15/1	25	31			26	15/1		SPARE		
PROCESS RM 208V RECEP		1300	20/2	27		1504		28	15/1	204	RECEP - 85M5 CHM PUMP		
		1300		29			2600	30	20/2	1300	POOL DECK 208V RECEP NORTH		
POOL DECK 208V RECEP SOUTH		1300	20/2	31	2600			32		1300			
		1300		33		1840		34	20/1	540	STORAGE RM RECEP'S		
SPARE			20/1	35			360	36	20/1	360	PUMP AREA RECEP'S		
SPARE			20/1	37	0			38	20/1		SPARE		
LIGHTING CTRL PNL (LCP-A)		4713	50/1	39		4713		40	20/1		SPARE		
RECEP'S(PROCESS RM EAST)		360	20/1	41			720	42	20/1	360	RECEP'S(PROCESS RM WEST)		
CHEM RM (WEST) EXH FAN		500	15/1	43	500			44			"SPACE"		
CHEM RM (WEST-CTR) EXH FAN		500	15/1	45		1040		46	15/1	540	PROCESS RM EXH FAN		
CHEM RM (CENTER) EXH FAN		500	15/1	47			1040	48	15/1	540	STORAGE RM EXH FAN		
CHEM RM (EAST-CTR) EXH FAN		500	15/1	49	500			50			"SPACE"		
"SPACE"				51		0		52			"SPACE"		
"SPACE"				53			500	54	15/1	500	EYEWASH/SHOWER EXH FAN		
					PHASE A	PHASE B	PHASE C						
VA/PHASE (SUBTOTAL)					15751	15803	16134	3Φ, 4W					
AMPS/PHASE (SUBTOTAL)					131.3	131.7	134.5	22,000 AIC BREAKERS					
VA (SUBTOTAL)					47688			NEMA 12					
25% OF LARGEST INDUCTIVE LOAD (VA)					1387	1387	1387						
GRAND TOTAL (AMPS)					143.9			* INDICATES LOAD CALCULATED AT 125%					
PERCENT CAPACITY					72.0%								

PANEL SCHEDULE NOTES

1. PROVIDE UPDATED, COMPLETE, AND ACCURATE TYPED PANELBOARD CIRCUIT DIRECTORIES AT THE COMPLETION OF WORK.
2. CIRCUIT BREAKERS SHALL BE CLASS A GFCI AND SPGFCI PER NEC 680.5, THERMAL MAGNETIC, TRIP INDICATING.
3. MULTI-POLE CIRCUIT BREAKERS SHALL BE EQUIPPED WITH AN INTERNAL COMMON TRIP MECHANISM.
4. CIRCUIT BREAKERS SHALL BE OF THE SAME MANUFACTURER AS THE PANELBOARD.
5. PANELBOARDS SHALL BE BOLT-ON TYPE.
6. BREAKER SHALL HAVE FIXED LOCKS WHEN REQUIRED BY NEC CODE.
7. PANELBOARDS SHALL BE PROVIDED WITH SPARE BREAKERS AS INDICATED.
8. "SPACE" INDICATES A LISTED CIRCUIT BREAKER COVER.
9. BOTH ENDS OF CONDUCTORS SHALL BE LABELED WITH THE PANEL NAME AND CIRCUIT.
10. EQUIPMENT FED FROM PANELBOARDS SHALL BE LABELED WITH THEIR CIRCUIT IN ACCORDANCE WITH NEC 110.22 (A).

CITY OF SANTA CLARITA
BUILDING & SAFETY
APPROVED
Under SCMC Titles 18, 19, 20, 21, 24, 25
Sep 16, 2025
F. Svendsen
BLD25-00576 (ARCH)
The approved plans must be available at the construction site at all times. Changes or alterations in approved plans shall not be made without written permission from the City of Santa Clarita Building & Safety Division. The approval of these plans shall not be construed to permit or approve any violation of the applicable codes, ordinances, or other laws.

PACE
Advanced Water Engineering
17520 Newhope Street, Suite 200 | Fountain Valley, CA 92708
P: (714) 481-7300 | www.pacewater.com

REVIEWED BY:	09/30/2025
Luis Trujillo	EXECUTION DATE
PM - DESIGN	
REVIEWED BY:	09/30/2025
	EXECUTION DATE
PM - CONSTRUCTION	

IN ACCORDANCE WITH RESOLUTION No. 19-6, AS A RESOLUTION OF THE CITY COUNCIL OF THE CITY OF SANTA CLARITA DELEGATING DISCRETIONARY AUTHORITY TO THE DIRECTOR OF NEIGHBORHOOD SERVICES, DIRECTOR OF RECREATION AND COMMUNITY SERVICES, DIRECTOR OF PUBLIC WORKS, CITY ENGINEER, AND ASSISTANT CITY ENGINEERS TO APPROVE PLANS AND DESIGNS FOR THE CONSTRUCTION OF OR IMPROVEMENTS TO PUBLIC PROPERTY FOR PURPOSES OF DESIGN IMMUNITY PURSUANT TO GOVERNMENT CODE SECTION 830.6 FOR THE CITY OF SANTA CLARITA, I DO HEREBY EXERCISE THE DISCRETION VESTED TO ME AND APPROVE THE PLAN OR DESIGN, WAIVER, ALTERATION OR MODIFICATION TO THE PLAN OR DESIGN, OR A CONSTRUCTION OF, OR AN IMPROVEMENT TO THE PUBLIC FACILITY, STRUCTURE, OR PROPERTY TO WHICH THIS STATEMENT, MY SIGNATURE AND DATE IS AFFIXED.

LICENSED PROFESSIONAL ENGINEER
MASHAR WATE ISHAQ
E 24590
EXP. 06/30/27
ELECTRICAL
STATE OF CALIFORNIA

PREPARED BY
ZIRANG SONG
PROJECT ENGINEER
R.C.E. NO. # 69315
EXP. 06/30/2026

DRAWN	SCALE	DATE
J.P		03/2025
DESIGNED		
J.P		
CHECKED		
Z.S		

TITLE
SINGLE LINE DIAGRAM PROPOSED

C258
NEWHALL PARK POOL
PUMP ROOM RENOVATION
PLANS (100% CD)
SANTA CLARITA CA

SHEET
E1.0
44 OF 60 SHEETS

JOB NO. C258

R:\C258\Engineering\C258-04 (100% CD)\sheets\C258-04 E1.0.dwg - Tab: 44 - by jpondergast on 09/29/25 at 3:53:12 PM

Docusign Envelope ID: F28B5F90-223C-42A7-9ED1-46868B540381
Xrefs: C258 Titleblock_EIEC.dwg
Dimscale = 40, LTscale = 1, PSltscale = 1, ACAD Ver. = 23.0s (LMS Tech), Visretain = 1

Sep. 29, 2025

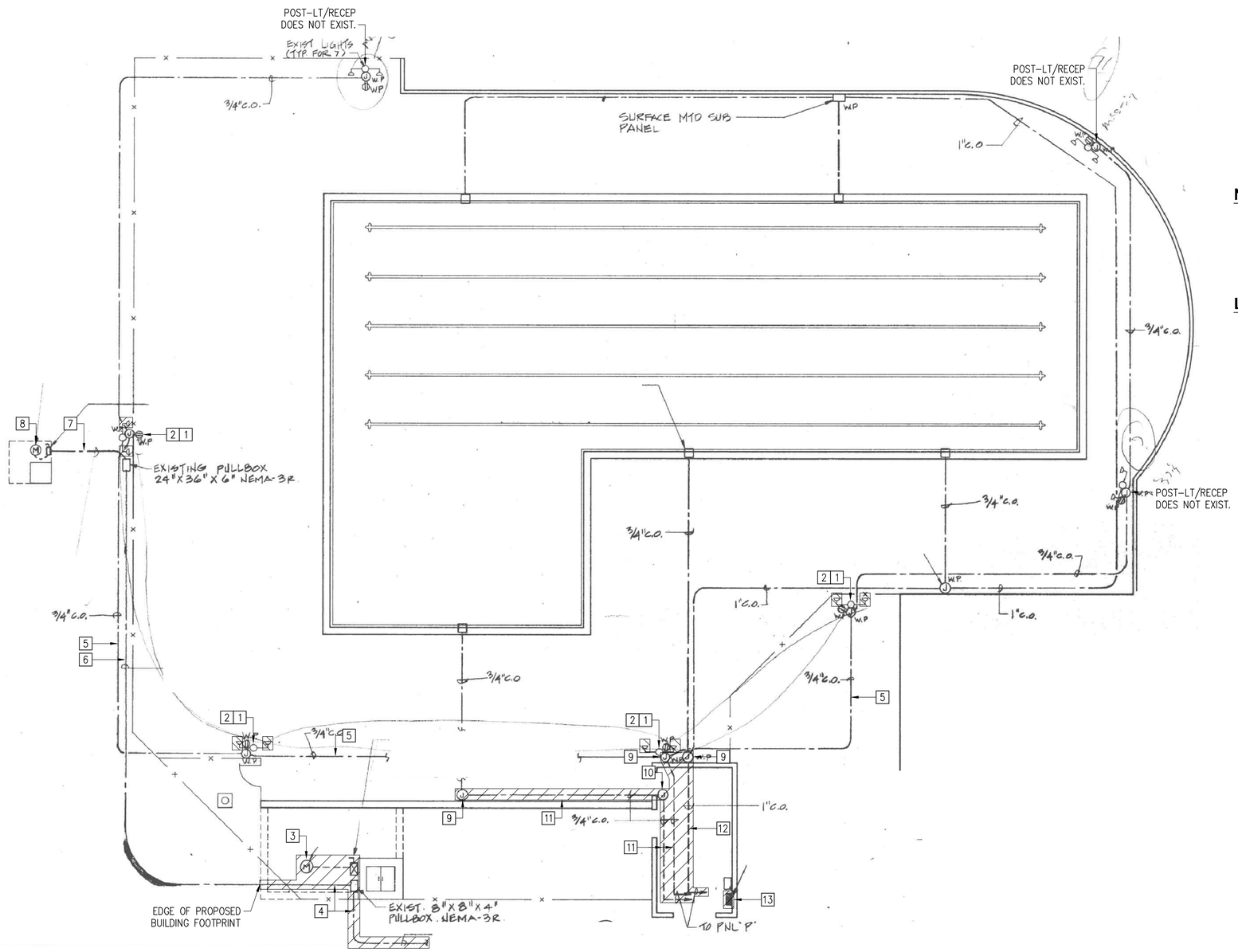

ELECTRICAL DEMO PLAN

NTS

NORTH

CONSTRUCTION NOTES:

1. REMOVE EXISTING POOL DECK POLE-MTD. LIGHT FIXTURES AND REPLACE PER SHEET E2.0 (TYP 8 FIXTURES).
2. EXISTING POOL DECK POST-MTD. RECEPTACLES, REMOVE AND REPLACE, SEE SHEET E2.0 (TYP 4).
3. EXISTING PUMP WILL BE REMOVED, SEE MECH PLANS. REMOVE ASSOCIATED VFD/CONTROL PANEL AND RETURN TO CLIENT. REMOVE ASSOCIATED CONDUITS/WIRING AND DISPOSE.
4. REMOVE HATCHED PORTION OF EXISTING SUMP PUMP CONDUIT AND DISPOSE (UNHATCHED PORTION TO BE PROTECTED IN PLACE). REMOVE WIRING AND DISPOSE.
5. EXISTING 3/4" CONDUIT, PROTECT IN PLACE. REMOVE WIRES AND DISPOSE.
6. EXISTING 1" CONDUIT, PROTECT IN PLACE. REMOVE WIRES AND DISPOSE.
7. EXISTING 1-1/2" CONDUIT, PROTECT IN PLACE. REMOVE WIRES AND DISPOSE.
8. EXISTING SUMP PUMP AND ASSOCIATED DISCONNECT SWITCH, PROTECT IN PLACE.
9. REMOVE EXISTNG J-BOXES AND DISPOSE. REPLACE PER SHEET E2.0.
10. REMOVE EXISTING J-BOXES AND DISPOSE.
11. REMOVE EXISTING 3/4" CONDUITS/WIRING AND DISPOSE.
12. REMOVE EXISTING 1" CONDUITS/WIRING AND DISPOSE.
13. REMOVE EXISTING PANEL "PMP" AND ASSOCIATED POWER CONDUIT/FEEDER CABLES AND DISPOSE. CONTRACTOR TO VERIFY PANEL LOADS BEFORE DEMOLISHING AND NOTIFY ENGINEER OF RECORD IF ANY DISCREPENCIES FOUND.

NOTES:

1. SHEET E-1 OF AS-BUILTS DATED FEBRUARY 1992 FROM JONES & MADHAVEN IS SHOWN ON THIS SHEET. CONTRACTOR TO VERIFY EXISTING CONDITIONS AND NOTIFY ENGINEER OF RECORD IF DISCREPENCIES FOUND.
2. NOT ALL ITEMS TO BE DEMO'D ARE SHOWN ON THIS SHEET. SEE REST OF PLAN SET FOR ADDITIONAL DEMO DETAILS.

LEGEND:

DEMO

CITY OF SANTA CLARITA
BUILDING & SAFETY
APPROVED
Under SCMC Titles 18, 19, 20, 21, 24, 25
Sep 16, 2025
F. Svendsen
BLD25-00576 (ARCH)
The approved plans must be available at the construction site at all times. Changes or alterations to approved plans shall not be made without written permission from the City of Santa Clarita Building & Safety Division. The approval of these plans shall not be construed to permit or approve any violation of the applicable codes, ordinances, or other laws.

PACE
Advanced Water Engineering
17520 Newhope Street, Suite 200 | Fountain Valley, CA 92708
P: (714) 481-7300 | www.pacewater.com

REVIEWED BY:	09/30/2025
Luis Trujillo	EXECUTION DATE
PM - DESIGN	
REVIEWED BY:	09/30/2025
	EXECUTION DATE
PM - CONSTRUCTION	

IN ACCORDANCE WITH RESOLUTION No. 19-6, AS A RESOLUTION OF THE CITY COUNCIL OF THE CITY OF SANTA CLARITA DELEGATING DISCRETIONARY AUTHORITY TO THE DIRECTOR OF PUBLIC WORKS, DIRECTOR OF RECREATION AND COMMUNITY SERVICES, DIRECTOR OF NEIGHBORHOOD SERVICES, CITY ENGINEER, AND CONSTANT CITY ENGINEERS TO APPROVE PLANS AND DESIGNS FOR THE CONSTRUCTION OF OR IMPROVEMENTS TO PUBLIC PROPERTY FOR PURPOSES OF DESIGN IMMUNITY PURSUANT TO GOVERNMENT CODE SECTION 830.6 FOR THE CITY OF SANTA CLARITA, I DO HEREBY EXERCISE THE DISCRETION VESTED TO ME AND APPROVE THE PLAN, DESIGN, OR SPECIFICATION, OR MODIFICATION TO THE PLAN OF DESIGN, OR A CONSTRUCTION, OF, OR AN IMPROVEMENT TO THE PUBLIC FACILITY, STRUCTURE, OR PROPERTY TO WHICH THIS STATEMENT, MY SIGNATURE AND DATE IS AFFIXED.

LICENSED PROFESSIONAL ENGINEER
MASHAR WATE ISHAQ
E 24590
EXP. 06/30/27
ELECTRICAL
STATE OF CALIFORNIA

PREPARED BY	
ZIRANG SONG	PROJECT ENGINEER
R.C.E. NO.	# 69315
EXP.	06/30/2026
DRAWN J.P	SCALE
DESIGNED J.P	
CHECKED Z.S	DATE 03/2025

TITLE

ELECTRICAL SITE DEMO PLAN

C258

NEWHALL PARK POOL

PUMP ROOM RENOVATION PLANS (100% CD)

SANTA CLARITA CA

SHEET

E2.0D

45 OF 60 SHEETS

JOB NO. C258

Docusign Envelope ID: F28B5F90-223C-42A7-8ED1-46B69B540361

Xrefs: C258 Titleblock_ELEC.dwg; Mechanical Layout.dwg; C258 Survey Basefile.dwg; Piping Layout.dwg; Grading Plan.dwg; C258 Survey Basefile civil 3d.dwg
Dmscale = 40; Lfactor = 1; PSfactor = 1; ACAD Ver. = 23.0s (LMS Tech); Viewfactor = 1

R:\C258\Engineering\C258-04 (100% CD)\sheets\C258-04 E2.0D.dwg – Tab: 45 – by jpendergrast on 09/29/25 at 3:53:17 PM

Sep. 29, 2025

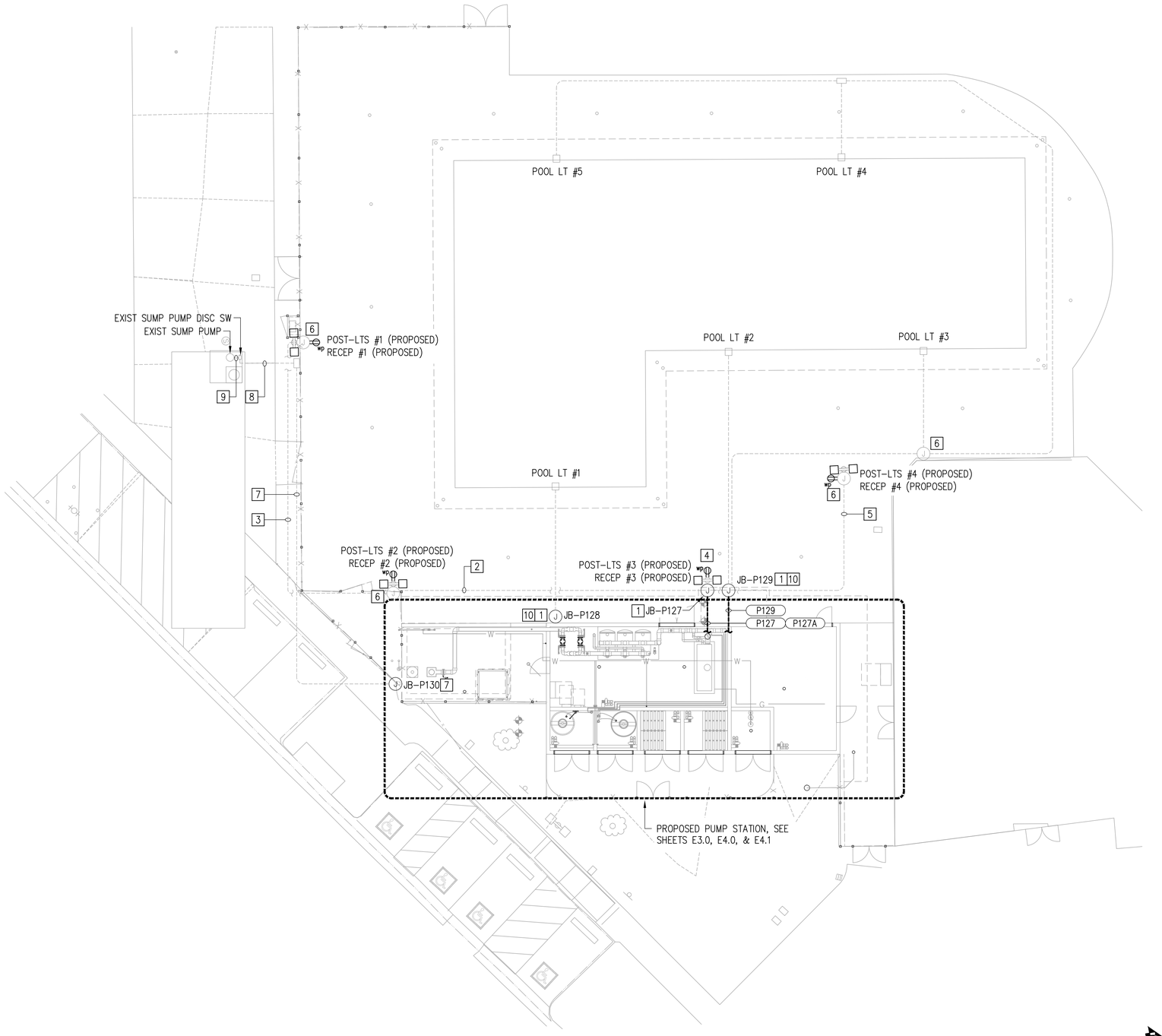

ELECTRICAL SITE PLAN

SCALE: 1"=10'-0"

CONSTRUCTION NOTES:

1. REPLACE EXISTING J-BOXES IN PLACE. REPLACEMENT J-BOXES TO BE NEMA 4X. SEE DETAIL "F" SHEET E7.1.
2. EXIST. 3/4"C, PROVIDE 2-#10, 1-#10G FOR POLE-MTD RECEPTACLES 1 & 2; 2-#12, 1-#12G FOR POLE-MTD. LIGHT SETS 1 & 2 (TYP 2 LIGHTS PER POLE).
3. EXIST. 3/4"C, PROVIDE 2-#10, 1-#10G FOR POLE-MTD RECEPTACLE 1; 2-#12, 1-#12G FOR POLE-MTD. LIGHT SET 1 (TYP 2 LIGHTS PER POLE).
4. PROVIDE 2-#10, 1-#10G FOR POLE-MTD RECEPTACLE 3; 2-#12, 1-#12G FOR POLE-MTD. LIGHT SET 3 (TYP 2 LIGHTS PER POLE).
5. EXIST. 3/4"C, PROVIDE 2-#10, 1-#10G FOR POLE-MTD RECEPTACLE 4; 2-#12, 1-#12G FOR POLE-MTD. LIGHT SET 4 (TYP 2 LIGHTS PER POLE).
6. CONTRACTOR TO CONFIRM ALL EXISTING J-BOXES ARE LISTED AS SWIMMING POOL J-BOXES.
7. INTERCEPT EXISTING 1" UG CONDUIT IN FIELD, REMOVE PORTION OF CONDUIT THAT IS TO BE REMOVED WITH EXISTING BUILDING AND CONNECT TO JUNCTION BOX WITH NEW 1" CONDUIT AS NEEDED. REPLACE EXISTING WIRES WITH 2-#10, 1-#10G.
8. EXISTING 1-1/2"C, REPLACE EXISTING WIRES WITH 2-#10, 1-#10G.
9. EXISTING CONDUIT (SIZE UNKNOWN), REPLACE EXISTING WIRES WITH 2-#10, 1-#10G. CONTRACTOR TO VERIFY CONDUIT SIZE TO ENSURE LESS THAN 40% FILL.
10. SPLICE WITH EXISTING POOL LIGHT POWER CONDUCTORS INSIDE PULLBOX.

NOTES:

1. GROUND AND BOND ALL EQUIPMENT AND ENCLOSURES PER MANUFACTURER REQUIREMENTS AND NEC 250.
2. LAYOUT OF EXISTING CONDUITS/J-BOXES SHOWN ARE APPROXIMATED FROM AS-BUILTS DATED FEBRUARY 1992 BY JONES AND MADHAVEN. CONTRACTOR TO NOTIFY ENGINEER OF RECORD IF ANY DISCREPENCIES FOUND.
3. LABEL ABOVEGROUND CONDUITS PER DETAIL "C" SHEET E7.0.
4. TYPICAL CONDUIT TRANSITIONS/STUB-UPS PER DETAILS "A, B, C" SHEET E7.1.

LEGEND:

- POLE-MTD. DUAL FLOOD LIGHTS, 3-WAY FIELD ADJUSTABLE, 140/100/70W, 3000K/4000K/5000K ADJUSTABLE COLOR TEMP, TRUNNION-MTD, 120V, 1PH, MF'R: RAB, PN X17-XFU-140-T (OR APPROVED EQUAL). EXISTING POLE, TYP 2 LIGHTS PER POLE.
- EXISTING JUNCTION BOX.
- LISTED POOL NEMA 4X JUNCTION BOX INSTALLED 8" MIN ABOVE MAX POOL WATER LEVEL, SEE DETAIL "F" SHEET E7.1.
- 120V, 1PH, GFCI WEATHER RESISTANT RECEPTACLE.

10 5 0 10 20

CITY OF SANTA CLARITA BUILDING & SAFETY
APPROVED
Under SCMC Titles 18, 19, 20, 21, 24, 25
Sep 16, 2025
F. Svendsen
BLD25-00576 (ARCH)
The approved plans must be available at the construction site at all times. Changes or alterations to approved plans shall not be made without written permission from the City of Santa Clarita Building & Safety Division. The approval of these plans shall not be construed to permit or approve any violation of the applicable codes, ordinances, or other laws.

PACE Advanced Water Engineering
17520 Newhope Street, Suite 200 | Fountain Valley, CA 92708
P: (714) 481-7300 | www.pacewater.com

REVIEWED BY:	09/30/2025
PM/DESIGNER	EXECUTION DATE
REVIEWED BY:	09/30/2025
PM-CONSTRUCTION	EXECUTION DATE

IN ACCORDANCE WITH RESOLUTION No. 19-6, AS A RESOLUTION OF THE CITY COUNCIL OF THE CITY OF SANTA CLARITA DELEGATING DISCRETIONARY AUTHORITY TO THE DIRECTOR OF PUBLIC WORKS, DIRECTOR OF RECREATION AND COMMUNITY SERVICES, DIRECTOR OF NEIGHBORHOOD SERVICES, CITY ENGINEER, AND CONSTANT CITY ENGINEERS TO APPROVE PLANS AND DESIGNS FOR THE CONSTRUCTION OF OR IMPROVEMENTS TO PUBLIC PROPERTY FOR PURPOSES OF DESIGN IMMUNITY PURSUANT TO GOVERNMENT CODE SECTION 830.6 FOR THE CITY OF SANTA CLARITA, I DO HEREBY EXERCISE THE DISCRETION DELEGATED TO ME AND APPROVE THE PLAN OR DESIGN, AMENDMENT OR MODIFICATION TO THE PLAN OR DESIGN, OR A CONSTRUCTION OF, OR AN IMPROVEMENT TO THE PUBLIC FACILITY, STRUCTURE, OR PROPERTY TO WHICH THIS STATEMENT, MY SIGNATURE AND DATE IS AFFIXED.

LICENSED PROFESSIONAL ENGINEER
MASHAR WATE ISHAQ
E 24590
EXP. 06/30/27
ELECTRICAL
STATE OF CALIFORNIA

PREPARED BY ZIRANG SONG	PROJECT ENGINEER # 69315
R.C.E. NO.	
EXP: 06/30/2026	
DRAWN J.P	SCALE
DESIGNED J.P	
CHECKED Z.S	DATE 03/2025

TITLE **ELECTRICAL SITE PLAN**

C258 **NEWHALL PARK POOL**
PUMP ROOM RENOVATION
PLANS (100% CD)
SANTA CLARITA *CA*

SHEET **E2.0**
46 OF 60 SHEETS

JOB NO. C258

Docusign Envelope ID: F28B5F90-223C-42A7-9ED1-4686B8542361
Xrefs: C258 Titleblock_ELEC.dwg; Mechanical Layout.dwg; C258 Survey Baseflie.dwg; Piping Layout.dwg; Grading Plan.dwg; C258 Survey Baseflie civil 3d.dwg
Dimscale = 40; LTscale = 1; PSltscale = 1; ACAD Ver. = 23.0s (LMS Tech); Visretain = 1
R:\C258\Engineering\C258-04 (100% CD)\sheets\C258-04 E2.0.dwg - Tab: 46 - by jpenlongfrost on 09/29/25 at 3:53:21 PM

Sep. 29, 2025

CONSTRUCTION NOTES:

1. PANELBOARD "PMP", 120/208V, 3Ø, 4W, 60 HZ, 22 KAIC, 200 A MCB/225 A BUS, EQUIPPED WITH SPD (MIN 50 KA/PH), NEMA 12, 54 CIRCUITS, WALL-MTD.
2. PUMP CONTROL PANEL WITH DISCONNECT SWITCH, TRANSFORMER, VFD, VFD BYPASS, 5% LINE REACTOR, PLC, NEMA 4X VENTILATED ENCLOSURE, WALL-MTD.
3. OUTDOOR LIGHTING CONTROL PANEL (LCP-A), 120-277 VAC, 1PH, 8 RELAYS, DIGITAL TIME CLOCK, ANALOG PHOTOSENSOR (WIRED TO PANEL MTD. OUTDOOR), PANEL DIMS: 14.41"Hx14.41"Wx4.05"D, MF'R: ACUITY BRANDS, PN ARP INTENCO8 NLT-8FCR-MVOLT-SC-SM-DTC-ARPA APS OL (OR APPROVED EQUAL).
4. DEDICATED GFCI RECEPTACLE FOR 45M5 CHEM DOSING PUMP.
5. DEDICATED GFCI RECEPTACLE FOR 85M5 CHEM DOSING PUMP.
6. CHEM CONTROLLER, 120V, 1PH, 0.5A CTLR, 32A RELAY OUTPUTS, MF'R BECS TECHNOLOGY, PN BECSYS7 OR APPROVED EQUAL.
7. FUSED DISCONNECT SWITCH, 100A, HEAVY-DUTY SINGLE THROW, 208V, 3P, 4W, NEMA 4X, STANCHION-MTD, MF'R EATON OR APPROVED EQUAL. SEE DETAIL "F" SHEET E7.1.
8. FROM PANEL-PMP.
9. INTERCEPT EXISTING 1" UG CONDUIT IN FIELD, REMOVE PORTION OF CONDUIT THAT IS TO BE REMOVED WITH EXISTING PUMP STATION AND CONNECT TO PROVIDED JUNCTION BOX WITH NEW 1" CONDUIT AS NEEDED. REPLACE EXISTING WIRES WITH 2-#10, 1-#10G.
10. VERTICAL MOTOR CONDUIT CONNECTION PER DETAIL "C" SHEET E7.2.
11. FLOW TRANSMITTER, MF'R GF SIGNET, 24 VDC, PN 9900 OR APPROVED EQUAL, WALL MTD.
12. FLOW SENSOR, MF'R GF SIGNET, OR APPROVED EQUAL.
13. PRESSURE TRANSDUCER.
14. LEVEL TRANSDUCER.
15. WET WELL SOLENOID FILL VALVE.
16. MOTOR STARTER PANEL, 120V, 1PH, NEMA 4X, TYPE EATON OR APPROVED EQUAL, WALL-MTD.
17. PRESSURE SUSTAINING PUMP.
18. EXHAUST FAN.
19. FAN MOTOR STARTER, 120V, 1PH, NEMA 4X, TYPE GREENHECK MS-1P OR APPROVED EQUAL, WALL-MTD.
20. FROM PUMP CONTROL PANEL.
21. TO PRESSURE SUSTAINING PUMP.

NOTES:

1. CONDUITS ARE SHOWN SCHEMATICALLY. CONTRACTOR SHALL INSTALL PULLPOINTS WHERE REQUIRED FOR PULLING TENSION AND MAINTAINING LESS THEN (4) 90 DEGREE BENDS.
2. MAINTAIN WORKING CLEARANCES IN FRONT OF PANELS AS REQUIRED PER NEC 110.26.
3. LABEL ABOVEGROUND CONDUITS PER DETAIL "C" SHEET E7.0.
4. TYPICAL CONDUIT TRANSITIONS/STUB-UPS PER DETAILS "A, B, C" SHEET E7.1.
5. PANEL WALL MOUNTING PER DETAIL "J" SHEET E7.1.

LEGEND:

φ 120V, 15A GFCI DUPLEX TAMPER-WEATHER RESISTANT RECEPTACLE.

(J) LISTED POOL NEMA 4X JUNCTION BOX INSTALLED 8" MIN ABOVE MAX POOL WATER LEVEL, SEE DETAIL "F" SHEET E7.1.

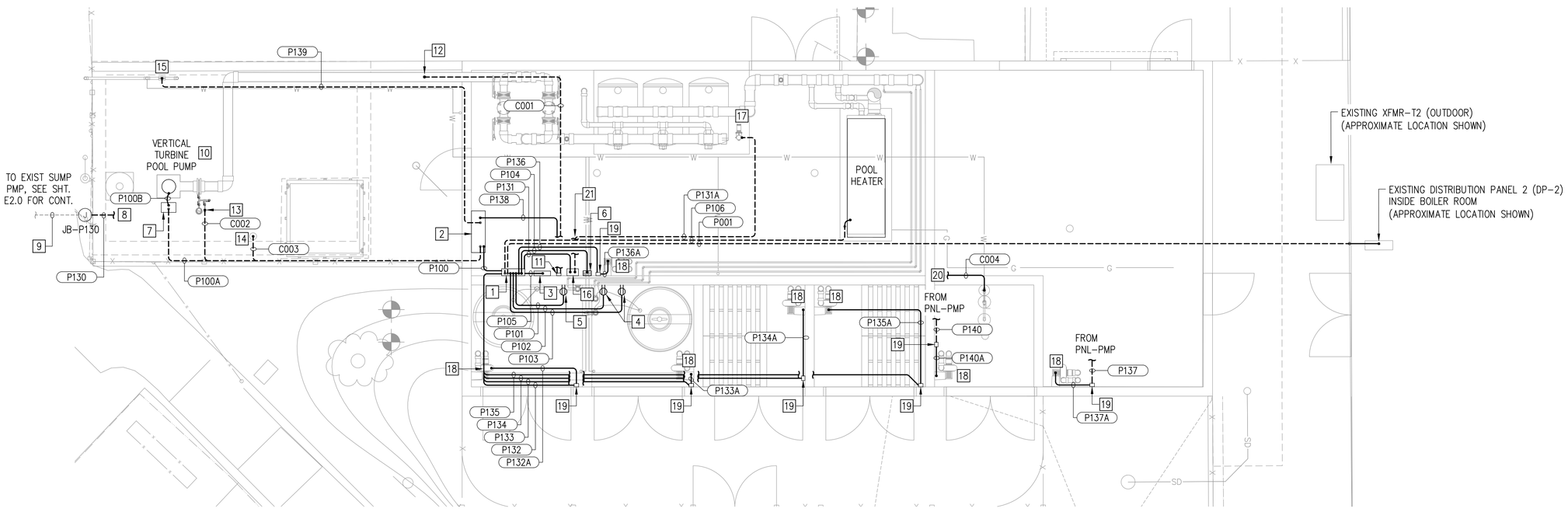

ELECTRICAL PLAN

SCALE: 1/4"=1'

CITY OF SANTA CLARITA BUILDING & SAFETY
APPROVED
Under SCMC Titles 18, 19, 20, 21, 24, 25
Sep 16, 2025
F. Svendsen
BLD25-00576 (ARCH)
The approved plans must be available at the construction site at all times. Changes or alterations to approved plans shall not be made without written permission from the City of Santa Clarita Building & Safety Division. The approval of these plans shall not be construed to permit or approve any violation of the applicable codes, ordinances, or other laws.

NORTH
4 2 0 4 8

PACE
Advanced Water Engineering
17520 Newhope Street, Suite 200 | Fountain Valley, CA 92708
P: (714) 481-7300 | www.pacewater.com

REVIEWED BY:	
Luke Trujillo	09/30/2025
PM/DESIGNER	EXECUTION DATE
REVIEWED BY:	
Chris Hu	09/30/2025
PM-CONSTRUCTION	EXECUTION DATE

IN ACCORDANCE WITH RESOLUTION No. 19-6, AS A RESOLUTION OF THE CITY COUNCIL OF THE CITY OF SANTA CLARITA DELEGATING DISCRETIONARY AUTHORITY TO THE DIRECTOR OF PUBLIC WORKS, DIRECTOR OF RECREATION AND COMMUNITY SERVICES, DIRECTOR OF NEIGHBORHOOD SERVICES, CITY ENGINEER, AND ASSISTANT CITY ENGINEERS TO APPROVE PLANS AND DESIGNS FOR THE CONSTRUCTION OF OR IMPROVEMENTS TO PUBLIC PROPERTY FOR PURPOSES OF DESIGN IMMUNITY PURSUANT TO GOVERNMENT CODE SECTION 830.6 FOR THE CITY OF SANTA CLARITA, I DO HEREBY EXERCISE THE DISCRETION DELEGATED TO ME AND APPROVE THE PLAN OR DESIGN, OR ANY MODIFICATION OR MODIFICATION TO THE PLAN OR DESIGN, OR A CONSTRUCTION, OR, OR AN IMPROVEMENT TO THE PUBLIC FACILITY, STRUCTURE, OR PROPERTY TO WHICH THIS STATEMENT, MY SIGNATURE AND DATE IS AFFIXED.

LICENSED PROFESSIONAL ENGINEER
MASHAR WATE ISHAQ
E 24590
EXP. 06/30/27
ELECTRICAL
STATE OF CALIFORNIA

PREPARED BY	
ZIRANG SONG	PROJECT ENGINEER
R.C.E. NO.	# 69315
EXP.	06/30/2026
DRAWN	SCALE
J.P.	
DESIGNED	
J.P.	
CHECKED	DATE
Z.S.	03/2025

TITLE **ELECTRICAL PLAN**

C258 **NEWHALL PARK POOL**
PUMP ROOM RENOVATION
PLANS (100% CD)
SANTA CLARITA CA

SHEET **E3.0**
47 OF 60 SHEETS

JOB NO. C258

Xrefs: C258 Titleblock_ELEC.dwg; Mechanical Layout.dwg; C258 Survey Basefile.dwg; Piping Layout.dwg; Grading Plan.dwg; C258 Survey Baseflie civil 3d.dwg
Dimscale = 40; LTscale = 1; PSltscale = 1; ACAD Ver. = 23.0s (LMS Tech); Visretain = 1

Docusign Envelope ID: F28B5F90-220C-42A7-9ED1-4B9B9540381

R:\C258\Engineering\C258-04 (100% CD)\sheets\C258-04 E3.0.dwg - Tab: 47 - by jenniferghost on 09/29/25 at 3:53:26 PM

Sep. 29, 2025

CONSTRUCTION NOTES:

1. OUTDOOR LIGHTING CONTROL PANEL (LCP-A), 120-277 VAC, 1PH, 8 RELAYS, DIGITAL TIME CLOCK, ANALOG PHOTOSENSOR (WIRED TO PANEL MTD. OUTDOOR), PANEL DIMS: 14.41"H x 14.41"W x 4.05"D, MF'R: ACUITY BRANDS, PN ARP INTENC08 NLT-8FCR-MVOLT-SC-SM-DTC-ARPA APS OL (OR APPROVED EQUAL).
2. TO PHOTOCELL.
3. FROM LIGHTING CTRL PANEL (LCP-A).
4. FROM PANEL-PMP.
5. PANELBOARD "PMP", 120/208V, 3Ø, 4W, 60 HZ, 22 KAIC, 200 A MCB/225 A BUS, EQUIPPED WITH SPD (MIN 50 KA/PH), NEMA 12, 54 CIRCUITS, WALL-MTD.
6. SPLICE WITH EXISTING POOL LIGHT POWER CONDUCTORS INSIDE PULLBOX.

NOTES:

1. CONDUCTORS FOR HOME RUN CIRCUITS FOR LIGHTING & RECEPTACLES SHALL BE #12 AWG MINIMUM SIZE.
2. ADDITIONAL RECEPTACLES ARE SHOWN ON THE POWER/CONTROL DRAWINGS IN THIS PLAN SET THAT ARE NOT SHOWN ON THE LIGHTING/RECEPTACLE PLANS DUE TO NATURE OF EQUIPMENT.
3. LIGHTING & RECEPTACLE WIRING SHALL BE TYPE XHHW-2.
4. RECEPTACLE OUTLETS SHALL BE CLEARLY LABELED WITH THE CIRCUIT PROVIDING POWER. LABEL SHALL BE SUITED FOR ENVIRONMENT RECEPTACLE IS LOCATED IN.
5. ALL WIRING SHOWN SHALL BE WITHIN CONDUITS (PVC COATED RGS FOR OUTDOOR EXPOSED CONDUIT AND RGS FOR INDOOR CONDUIT).
6. ALL CONDUITS SHALL CONTAIN A PROPERLY SIZED GROUND CONDUCTOR. DE-RATE CONDUCTORS PER NEC 310.15(C)(1).
7. MOUNT AND WIRE ALL EQUIPMENT PER MANUFACTURER REQUIREMENTS.
8. DE-RATE CONDUCTOR AMPACITY BASED ON # OF CURRENT CARRYING CONDUCTORS AS APPLICABLE.
9. OUTLETS AT CMU WALL PER DETAIL "A" SHEET E7.2.
10. LABEL ABOVEGROUND CONDUITS PER DETAIL "C" SHEET E7.0.
11. CONTRACTOR TO LABEL ALL 208V RECEPTACLE WITH VOLTAGE AND CIRCUIT NUMBER.

LEGEND:

PMP-# / 25W OS — INDICATES CIRCUIT NUMBER
LINEAR WASHDOWN 2FT, 25W, 5000K LED, 120-277V, NEMA 4X, 0-10V DIMMER. WITH OCCUPANCY SENSOR, MF'R: RAB PN SHARK2-25W/D10/MVS (OR APPROVED EQUAL)

PMP-# / 50W OS — INDICATES CIRCUIT NUMBER
LINEAR WASHDOWN 4FT, 50W, 5000K LED, 120-277V, NEMA 4X, 0-10V DIMMER. WITH OCCUPANCY SENSOR, MF'R: RAB PN SHARK4-50W/D10/MVS (OR APPROVED EQUAL)

PMP-# / 70W — INDICATES CIRCUIT NUMBER
LINEAR WASHDOWN 8FT, 70W, 5000K LED, 120-277V, NEMA 4X, 0-10V DIMMER. MF'R: RAB PN SHARK8-70W/D10 (OR APPROVED EQUAL)

$3 — 120 VAC, 20A, WALL-MTD. LIGHT SWITCH LOCATED AT 42" AFF. NUMBER INDICATES 3-WAY SWITCH REQUIRED.

((— HASH MARKS INDICATE NUMBER OF CURRENT CARRYING CONDUCTORS. GROUND CONDUCTOR(S) NOT SHOWN FOR CLARITY. ALL CONDUITS SHALL HAVE A MINIMUM #12 GROUND AND SIZED PER CODE REQUIREMENTS.

OUTDOOR LED WALL PACK, 57W, 3000K LED, 120-277V, BRONZE, 0-10V DIMMABLE, MF'R: RAB, PN SLIM57Y/D10 (OR APPROVED EQUAL).

EXIT — EXIT SIGN WITH INTEGRATED LIGHTS, 120V, 20 WATTS, 90 MINUTE BACK UP BATTERY, MF'R: THE EXIT LIGHT CO., PN WLCX-R-BB OR APPROVED EQUAL

WP — 120V, 1PH, 20A GFCI DUPLEX TAMPER-WEATHER RESISTANT RECEPTACLE. (WP = WEATHER-PROOF WHILE-IN-USE COVER REQUIRED).

WP 208V — 208V, 1PH, 20A GFCI DUPLEX TAMPER-WEATHER RESISTANT RECEPTACLE. (WP = WEATHER-PROOF WHILE-IN-USE COVER REQUIRED).

POLE-MTD. DUAL FLOOD LIGHTS, 3-WAY FIELD ADJUSTABLE, 140/100/70W, 3000K/4000K/5000K ADJUSTABLE COLOR TEMP, TRUNNION-MTD, 120V, 1PH, MF'R: RAB, PN X17-XFU-140-T (OR APPROVED EQUAL). EXISTING POLE, TYP 2 LIGHTS PER POLE.

J — LISTED POOL NEMA 4X JUNCTION BOX INSTALLED 8" MIN ABOVE MAX POOL WATER LEVEL, SEE DETAIL "F" SHEET E7.1.

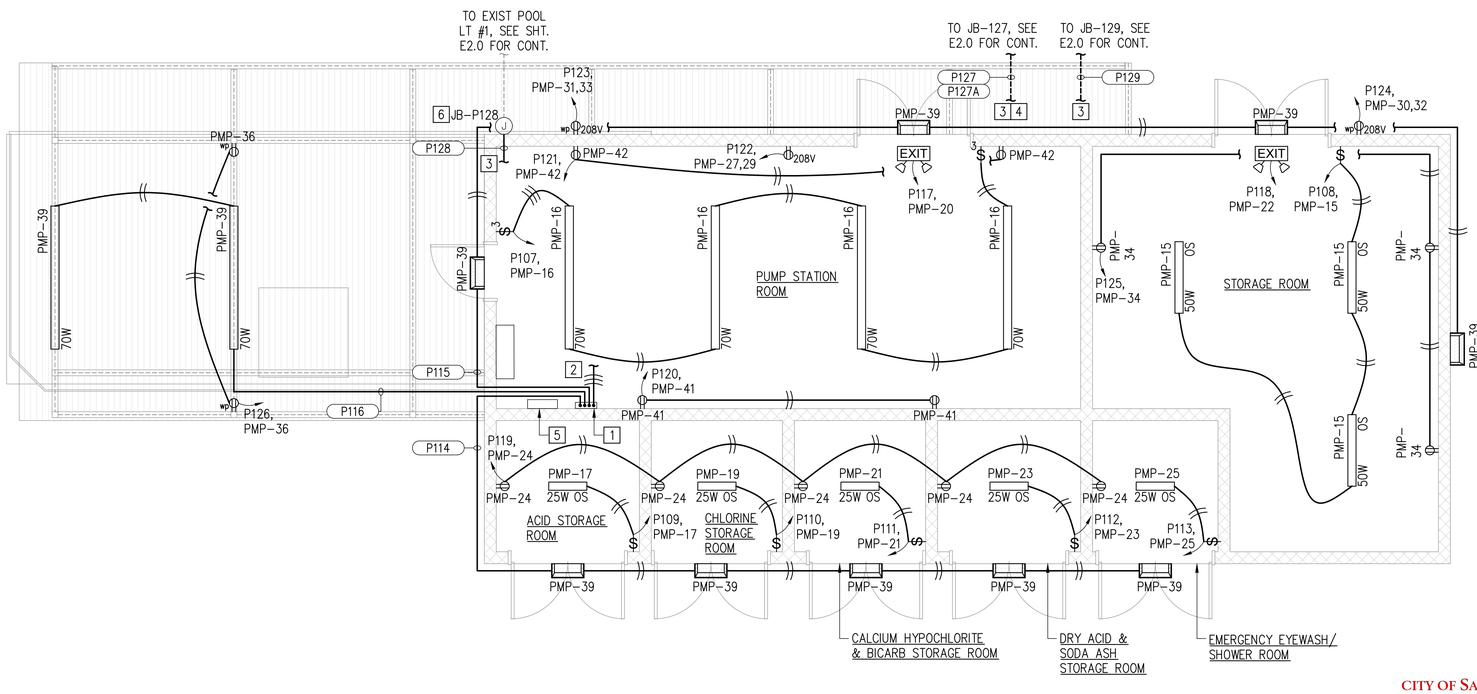

LIGHTING AND RECEPTACLE PLAN

SCALE: 1/4"=1'

CITY OF SANTA CLARITA BUILDING & SAFETY
APPROVED
Under SCMC Titles 18, 19, 20, 21, 24, 25
Sep 16, 2025
F. Svendsen
BLD25-00576 (ARCH)
The approved plans must be available at the construction site at all times. The approval of these plans shall not be construed to permit, nor shall it be construed to authorize any violation of the applicable codes, ordinances, or other laws.

4 2 0 4 8

PACE
Advanced Water Engineering
17520 Newhope Street, Suite 200 | Fountain Valley, CA 92708
P: (714) 481-7300 | www.pacewater.com

REVIEWED BY:	
Luis Trujillo	09/30/2025
PM - DESIGN	EXECUTION DATE
REVIEWED BY:	09/30/2025
PM - CONSTRUCTION	EXECUTION DATE

IN ACCORDANCE WITH RESOLUTION No. 19-6, AS A RESOLUTION OF THE CITY COUNCIL OF THE CITY OF SANTA CLARITA DELEGATING DISCRETIONARY AUTHORITY TO THE DIRECTOR OF PUBLIC WORKS, DIRECTOR OF RECREATION AND COMMUNITY SERVICES, DIRECTOR OF NEIGHBORHOOD SERVICES, CITY ENGINEER, AND ASSISTANT CITY ENGINEERS TO APPROVE PLANS AND DESIGNS FOR THE CONSTRUCTION OF OR IMPROVEMENTS TO PUBLIC PROPERTY FOR PURPOSES OF DESIGN IMMUNITY PURSUANT TO GOVERNMENT CODE SECTION 830.6 FOR THE CITY OF SANTA CLARITA, I DO HEREBY EXERCISE THE DISCRETION VESTED IN ME BY THE ABOVE RESOLUTION AND APPROVE THE PLAN OR MODIFICATION TO THE PLAN OF DESIGN, OR A CONSTRUCTION, OR, OR AN IMPROVEMENT TO THE PUBLIC FACILITY, STRUCTURE, OR PROPERTY TO WHICH THIS STATEMENT, MY SIGNATURE AND DATE IS AFFIXED.

LICENSED PROFESSIONAL ENGINEER
MASHAR WATE ISHAQ
E 24590
EXP. 06/30/27
ELECTRICAL
STATE OF CALIFORNIA

PREPARED BY	PROJECT ENGINEER
ZIRANG SONG	R.C.E. NO. # 69315
	EXP. 06/30/2026
DRAWN: J.P	SCALE
DESIGNED: J.P	
CHECKED: Z.S	DATE 03/2025

TITLE: LIGHTING AND RECEPTACLE PLAN

C258 NEWHALL PARK POOL
PUMP ROOM RENOVATION
PLANS (100% CD)
SANTA CLARITA CA

SHEET E4.0
48 OF 60 SHEETS

JOB NO. C258

R:\C258\Engineering\C258-04 (100% CD)\sheets\C258-04 E4.0.dwg - Tab: 48 - by jpenterghost on 09/29/25 at 3:53:31 PM

Docusign Envelope ID: F28B5F90-223C-42A7-9ED1-46868B540361

Xrefs: C258 Titleblock_ELEC.dwg; Mechanical Layout.dwg; C258 Survey Baseflie.dwg; Piping Layout.dwg; Grading Plan.dwg; C258 Survey Baseflie civil 3d.dwg
Dimscale = 40, Ltscale = 1, PSltscale = 1, ACAD Ver. = 23.0s (LMS Tech), Visretain = 1

Sep. 29, 2025

CONSTRUCTION NOTES:

1. EXOTHERMIC WELD PER DETAIL "H" SHEET E7.0.
2. 4/0 BARE CU GROUND RING, MINIMUM 30" BELOW GRADE.
3. GROUND INSPECTION ROD PER DETAIL "F" SHEET E7.0.
4. GROUND ROD PER DETAIL "A" SHEET E7.0.
5. GROUND TO REBAR PER DETAIL "G" SHEET E7.0 & "G" SHEET E7.1.
6. GROUND TO FENCELINE PER DETAIL "D" SHEET E7.0.
7. #2 BARE COPPER, GROUNDING ELECTRODE CONDUCTOR (TYP)
8. GROUNDING BUS BAR PER DETAIL "E" SHEET E7.1.
9. GROUND EQUIPMENT PER DETAIL "B" SHEET E7.0.
10. BOND ELECTRICAL PANELS TO BUS BAR.
11. GROUND WET WELL ACCESS HATCHES AND METAL LADDERS (IF PRESENT).
12. GROUND PUMP MOTOR.
13. GROUND STEEL CANOPY POSTS PER DETAIL "E" SHEET E7.0.
14. GROUND TO STEEL ROOF.
15. #4/0 GROUNDING ELECTRODE CONDUCTOR ROUTED THROUGH 1.5" SCH 80 PVC SEALED AT BOTH ENDS WITH APPROVED SEALANT.
16. 4/0 BARE COPPER CONDUCTOR.
17. BOND PROPOSED J-BOXES TO GROUND RING.

NOTES:

1. GROUND AND BOND ALL EQUIPMENT AND ENCLOSURES PER MANUFACTURER REQUIREMENTS AND NEC 250.
2. GROUND AND BOND ALL MOTOR FRAMES TO THE GROUND RING.
3. ALL METALLIC ENCLOSURES INCLUDING RAILINGS, FENCES OR OTHER METAL THAT PERSONNEL MAY COME IN CONTACT WITH SHALL BE EFFECTIVELY GROUNDED.
4. BARE GROUND CONNECTIONS EXPOSED TO THE ATMOSPHERE SHALL BE COVERED WITH GLYPTAL OR EQUIVALENT.
5. GROUND FLOW METERS PER DETAIL "H" SHEET E7.1.
6. GROUNDING AND BONDING FOR WET WELL SHALL MEET REQUIREMENTS OF NEC 250.110.
7. BOND ALL METAL PARTS.

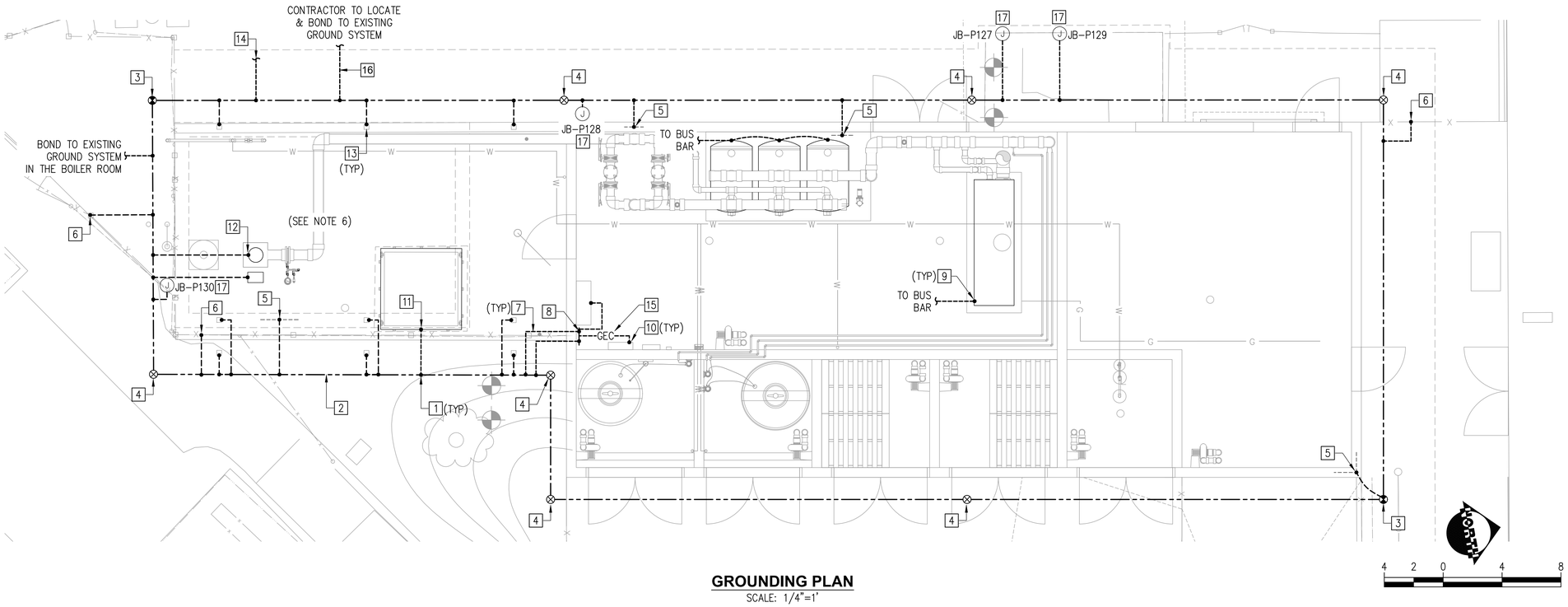

GROUNDING PLAN

SCALE: 1/4"=1'

CITY OF SANTA CLARITA BUILDING & SAFETY
APPROVED
Under SCMC Titles 18, 19, 20, 21, 24, 25
Sep 16, 2025
F. Svendsen
BLD25-00576 (ARCH)
The approved plans must be available at the construction site at all times. Changes or alterations to approved plans shall not be made without written permission from the City of Santa Clarita Building & Safety Division. The approval of these plans shall not be construed to permit or approve any violation of the applicable codes, ordinances, or other laws.

PACE Advanced Water Engineering
17520 Newhope Street, Suite 200 | Fountain Valley, CA 92708
P: (714) 481-7300 | www.pacewater.com

REVIEWED BY:	
Lead Engr.	09/30/2025
PM/DESIGNER	EXECUTION DATE
REVIEWED BY:	
PM-CONSTRUCTION	09/30/2025 EXECUTION DATE

IN ACCORDANCE WITH RESOLUTION No. 19-6, AS A RESOLUTION OF THE CITY COUNCIL OF THE CITY OF SANTA CLARITA DELEGATING DISCRETIONARY AUTHORITY TO THE DIRECTOR OF PUBLIC WORKS, DIRECTOR OF RECREATION AND COMMUNITY SERVICES, DIRECTOR OF NEIGHBORHOOD SERVICES, CITY ENGINEER, AND ASSISTANT CITY ENGINEERS TO APPROVE PLANS AND DESIGNS FOR THE CONSTRUCTION OF OR IMPROVEMENTS TO PUBLIC PROPERTY FOR PURPOSES OF DESIGN IMMUNITY PURSUANT TO GOVERNMENT CODE SECTION 830.6 FOR THE CITY OF SANTA CLARITA, I DO HEREBY EXERCISE THE DISCRETION VESTED IN ME BY THE CITY COUNCIL AND APPROVE THE PLAN OR DESIGN, OR MODIFICATION TO THE PLAN OR DESIGN, OR A CONSTRUCTION OF, OR AN IMPROVEMENT TO THE PUBLIC FACILITY, STRUCTURE, OR PROPERTY TO WHICH THIS STATEMENT, MY SIGNATURE AND DATE IS AFFIXED.

LICENSED PROFESSIONAL ENGINEER
MASHAR WATE ISHAQ
E 24590
EXP. 06/30/27
ELECTRICAL
STATE OF CALIFORNIA

PREPARED BY ZIRANG SONG	
R.C.E. NO. # 69515	PROJECT ENGINEER
EXP: 06/30/2026	
DRAWN J.P	SCALE
DESIGNED J.P	
CHECKED Z.S	DATE 03/2025

TITLE **GROUNDING PLAN**

C258 **NEWHALL PARK POOL**
PUMP ROOM RENOVATION
PLANS (100% CD)
SANTA CLARITA CA

SHEET **E4.1**
49 OF 60 SHEETS

JOB NO. C258

Docusign Envelope ID: F28B5F90-223C-42A7-9ED1-4886B8540361

Xrefs: C258 Titleblock_ELEC.dwg; Mechanical Layout.dwg; C258 Survey Basefile.dwg; Piping Layout.dwg; Grading Plan.dwg; C258 Survey Basefile civil 3d.dwg
Dimscale = 40; LTscale = 1; PSltscale = 1; ACAD Ver. = 23.0s (LMS Tech); Viewtoln = 1

R:\C258\Engineering\C258-04 (100% CD)\sheets\C258-04 E4.1.dwg - Tab: 49 - by gerardgrost on 09/29/25 at 3:53:36 PM

Sep. 29, 2025

POWER CONDUIT WIRE SCHEDULE

CONDUIT		WIRE*		FROM	TO	REMARKS
NO.	SIZE	POWER	GROUND			
P001	2-1/2"	4 - 4/0	1 - #4	EXISTING DISTRIBUTION PANEL 2 (DP-2)	PANEL-PMP	
P100	1-1/2"	3 - #3	1 - #4	PANEL-PMP (CKTS. 2, 4, 6)	VFD - VERTICAL TURBINE POOL PUMP	VFD INSIDE PUMP CONTROL PANEL
P100A	1-1/2"	3 - #3	1 - #4	VFD - VERTICAL TURBINE POOL PUMP	DISC SW - VERTICAL TURBINE POOL PUMP	
P100B	1-1/2"	3 - #3	1 - #4	DISC SW - VERTICAL TURBINE POOL PUMP	VERTICAL TURBINE POOL PUMP	
P101	3/4"	2 - #12	1 - #12	PANEL-PMP (CKT. 28)	DEDICATED GFCI RECEP - 85M5 CHEM DOSING PUMP	EXISTING PUMP RELOCATED
P102	3/4"	2 - #12	1 - #12	PANEL-PMP (CKT. 3)	DEDICATED GFCI RECEP - 45M5 CHEM DOSING PUMP	EXISTING PUMP RELOCATED
P103	3/4"	2 - #12	1 - #12	PANEL-PMP (CKT. 5)	DEDICATED GFCI RECEP - 45M5 CHEM DOSING PUMP	EXISTING PUMP RELOCATED
P104	3/4"	2 - #8	1 - #8	PANEL-PMP (CKT. 7)	CHEM CONTROLLER	
P105	3/4"	2 - #8	1 - #8	PANEL-PMP (CKT. 39)	LIGHTING CONTROL PANEL (LCP-A)	
P106	3/4"	4 - #10	2 - #10	PANEL-PMP (CKT. 12, 14)	POOL HEATER	FOR HEATER BOILER & PUMP
P107	3/4"	2 - #12	1 - #12	PANEL-PMP (CKT. 16)	PROCESS RM LIGHT SWITCH	
P108	3/4"	2 - #12	1 - #12	PANEL-PMP (CKT. 15)	STORAGE RM LIGHT SWITCH	
P109	3/4"	2 - #12	1 - #12	PANEL-PMP (CKT. 17)	CHEM RM (WEST) LIGHT	
P110	3/4"	2 - #12	1 - #12	PANEL-PMP (CKT. 19)	CHEM RM (WEST-CTR) LIGHT	
P111	3/4"	2 - #12	1 - #12	PANEL-PMP (CKT. 21)	CHEM RM (CENTER) LIGHT	
P112	3/4"	2 - #12	1 - #12	PANEL-PMP (CKT. 23)	CHEM RM (EAST-CTR) LIGHT	
P113	3/4"	2 - #12	1 - #12	PANEL-PMP (CKT. 25)	CHEM RM (EAST) LIGHT	
P114	3/4"	2 - #12	1 - #12	LIGHTING CONTROL PANEL (LCP-A)	BUILDING OUTDOOR WALL PACKS (EAST)	
P115	3/4"	2 - #12	1 - #12	LIGHTING CONTROL PANEL (LCP-A)	BUILDING OUTDOOR WALL PACKS (NORTH, WEST, SOUTH)	
P116	3/4"	2 - #12	1 - #12	LIGHTING CONTROL PANEL (LCP-A)	PUMP AREA OUTDOOR LIGHTS	
P117	3/4"	2 - #12	1 - #12	PANEL-PMP (CKT. 20)	EXIT SIGN (PROCESS RM)	
P118	3/4"	2 - #12	1 - #12	PANEL-PMP (CKT. 22)	EXIT SIGN (STORAGE RM)	
P119	3/4"	2 - #12	1 - #12	PANEL-PMP (CKT. 24)	RECEPTACLES (CHEM ROOMS)	GFCI RECEPTACLES
P120	3/4"	2 - #12	1 - #12	PANEL-PMP (CKT. 41)	RECEPTACLES (PROCESS RM EAST)	GFCI RECEPTACLES
P121	3/4"	2 - #12	1 - #12	PANEL-PMP (CKT. 42)	RECEPTACLES (PROCESS RM WEST)	GFCI RECEPTACLES
P122	3/4"	2 - #12	1 - #12	PANEL-PMP (CKT. 27, 29)	RECEPTACLE (PROCESS RM 208V)	GFCI RECEPTACLE
P123	3/4"	2 - #12	1 - #12	PANEL-PMP (CKT. 31, 33)	RECEPTACLE (POOL DECK 208V SOUTH)	GFCI RECEPTACLE
P124	3/4"	2 - #12	1 - #12	PANEL-PMP (CKT. 30, 32)	RECEPTACLE (POOL DECK 208V NORTH)	GFCI RECEPTACLE
P125	3/4"	2 - #12	1 - #12	PANEL-PMP (CKT. 34)	RECEPTACLES (STORAGE RM)	GFCI RECEPTACLES
P126	3/4"	2 - #12	1 - #12	PANEL-PMP (CKT. 36)	RECEPTACLES (PUMP AREA)	GFCI RECEPTACLES

CITY OF SANTA CLARITA
BUILDING & SAFETY
APPROVED
Under SCMC Titles 18, 19, 20, 21, 24, 25
Sep 16, 2025
F. Svendsen
BLD25-00576 (ARCH)
The approved plans must be available at the construction site at all times. Changes or alterations to approved plans shall not be made without written permission from the City of Santa Clarita Building & Safety Division. The approval of these plans shall not be construed to permit or approve any violation of the applicable codes, ordinances, or other laws.

PACE
Advanced Water Engineering
17520 Newhope Street, Suite 200 | Fountain Valley, CA 92708
P: (714) 481-7300 | www.pacewater.com

REVIEWED BY:	
Luis Trujillo	09/30/2025
PM - DESIGN	EXECUTION DATE
REVIEWED BY:	
Vince Sia	09/30/2025
PM - CONSTRUCTION	EXECUTION DATE

IN ACCORDANCE WITH RESOLUTION No. 19-6, AS A RESOLUTION OF THE CITY COUNCIL OF THE CITY OF SANTA CLARITA DELEGATING DISCRETIONARY AUTHORITY TO THE DIRECTOR OF PUBLIC WORKS, DIRECTOR OF RECREATION AND COMMUNITY SERVICES, DIRECTOR OF NEIGHBORHOOD SERVICES, CITY ENGINEER, AND ASSISTANT CITY ENGINEERS TO APPROVE PLANS AND DESIGNS FOR THE CONSTRUCTION OF OR IMPROVEMENTS TO PUBLIC PROPERTY FOR PURPOSES OF DESIGN IMMUNITY PURSUANT TO GOVERNMENT CODE SECTION 830.6 PAS SET FORTH IN THE CITY'S APPROVED DELEGATION, I DO HEREBY EXERCISE THE DISCRETION DELEGATED TO ME TO APPROVE THE PLAN OR DESIGN OF AN IMPROVEMENT OR MODIFICATION TO THE PLAN OR DESIGN, OR A CONSTRUCTION OF, OR AN IMPROVEMENT TO THE PUBLIC FACILITY, STRUCTURE, OR PROPERTY TO WHICH THIS STATEMENT, MY SIGNATURE AND DATE IS AFFIXED.

LICENSED PROFESSIONAL ENGINEER
NATE ISMAEL
09/30/25
CALIFORNIA

PREPARED BY
ZIRANG SONG
PROJECT ENGINEER
R.C.E. NO. 76262
EXP: 06/30/27

CABLE & CONDUIT SCHEDULE

DRAWN	DESIGNED	CHECKED
J.P	J.P	Z.S
DATE 03/2025		

TITLE

C258

NEWHALL PARK POOL
PUMP ROOM RENOVATION
PLANS (100% CD)
SANTA CLARITA CA

SHEET E5.0
49 OF 60 SHEETS

JOB NO. C258

Docusign Envelope ID: F28B5F90-223C-42A7-9ED1-4886B8540361

Xrefs: C258 Titleblock_ELEC.dwg
Dimscale = 40, Ltscale = 1, PSltscale = 1, ACAD Ver. = 23.0s (LMS Tech), Visretain = 1

R:\C258\Engineering\C258-04 (100% CD)\sheets\C258-04 E5.0.dwg - Tab: 47 - by jpondergast on 09/29/25 at 3:53:45 PM

Sep. 29, 2025

POWER CONDUIT WIRE SCHEDULE

CONDUIT NO.	CONDUIT SIZE	WIRE* POWER	WIRE* GROUND	FROM	TO	REMARKS
P127	3/4"	4 - #10	2 - #10	PANEL-PMP (CKTS. 9, 11)	JB-P127	FOR EXIST POOL DECK POST LT RECEP 1, 2, 3, 4
P127A	3/4"	4 - #12	2 - #12	LIGHTING CONTROL PANEL (LCP-A)	JB-P127	FOR POOL DECK POST LTS 1, 2, 3, 4
P128	3/4"	2 - #12	1 - #12	LIGHTING CONTROL PANEL (LCP-A)	JB-P128	FOR EXIST POOL LT 1
P129	1"	4 - #10, 4 - #12	2 - #10, 2 - #12	LIGHTING CONTROL PANEL (LCP-A)	JB-P129	FOR EXIST POOL LTS 2, 3, 4, 5
P130	1"	2 - #10	1 - #10	PANEL-PMP (CKT. 18)	JB-P130	FOR EXIST SUMP PUMP
P131	3/4"	2 - #12	1 - #10	PANEL-PMP (CKT. 8)	MOTOR STARTER - PRESSURE SUSTAINING PUMP	
P131A	3/4"	2 - #12	1 - #10	MOTOR STARTER - PRESSURE SUSTAINING PUMP	PRESSURE SUSTAINING PUMP	
P132	3/4"	2 - #12	1 - #12	PANEL-PMP (CKT. 43)	MOTOR STARTER - CHEM RM (WEST) EXHAUST FAN	
P132A	3/4"	2 - #12	1 - #12	MOTOR STARTER - CHEM RM (WEST) EXHAUST FAN	CHEM RM (WEST) EXHAUST FAN	
P133	3/4"	2 - #12	1 - #12	PANEL-PMP (CKT. 45)	MOTOR STARTER - CHEM RM (WEST-CTR) EXHAUST FAN	
P133A	3/4"	2 - #12	1 - #12	MOTOR STARTER - CHEM RM (WEST-CTR) EXHAUST FAN	CHEM RM (WEST-CTR) EXHAUST FAN	
P134	3/4"	2 - #12	1 - #12	PANEL-PMP (CKT. 47)	MOTOR STARTER - CHEM RM (CENTER) EXHAUST FAN	
P134A	3/4"	2 - #12	1 - #12	MOTOR STARTER - CHEM RM (CENTER) EXHAUST FAN	CHEM RM (CENTER) EXHAUST FAN	
P135	3/4"	2 - #12	1 - #12	PANEL-PMP (CKT. 49)	MOTOR STARTER - CHEM RM (EAST-CTR) EXHAUST FAN	
P135A	3/4"	2 - #12	1 - #12	MOTOR STARTER - CHEM RM (EAST-CTR) EXHAUST FAN	CHEM RM (EAST-CTR) EXHAUST FAN	
P136	3/4"	2 - #12	1 - #12	PANEL-PMP (CKT. 46)	MOTOR STARTER - PROCESS RM EXHAUST FAN	
P136A	3/4"	2 - #12	1 - #12	MOTOR STARTER - PROCESS RM EXHAUST FAN	PROCESS RM EXHAUST FAN	
P137	3/4"	2 - #12	1 - #12	PANEL-PMP (CKT. 48)	MOTOR STARTER - STORAGE RM EXHAUST FAN	
P137A	3/4"	2 - #12	1 - #12	MOTOR STARTER - STORAGE RM EXHAUST FAN	STORAGE RM EXHAUST FAN	
P138	3/4"	2 - #12	1 - #12	PUMP CONTROL PANEL	FLOW TRANSMITTER	24 VDC POWER
P139	3/4"	2 - #12	1 - #12	PUMP CONTROL PANEL	SOLENOID FILL VALVE	
P140	3/4"	2 - #12	1 - #12	PANEL-PMP (CKT. 54)	MOTOR STARTER - EMERG EYEWASH/SHOWER EXHAUST FAN	
P140A	3/4"	2 - #12	1 - #12	MOTOR STARTER - EMERG EYEWASH/SHOWER EXHAUST FAN	EMERG EYEWASH/SHOWER EXHAUST FAN	

CONTROL CONDUIT WIRE SCHEDULE

CONDUIT NO.	CONDUIT SIZE	WIRE* CONTROL	FROM	TO	REMARKS
C001	SEE NOTE 1	1 - FACT. CBL.	FLOW TRANSMITTER	FLOW SENSOR	
C002	3/4"	1 - #18 TSP	PLC	PRESSURE TRANSDUCER	PLC INSIDE PUMP CONTROL PANEL
C003	3/4"	1 - #18 TSP	PLC	LEVEL TRANSDUCER	PLC INSIDE PUMP CONTROL PANEL
C004	3/4"	2 - #14	PLC	EYEWASH FLOW SWITCH	PLC INSIDE PUMP CONTROL PANEL

NOTES:

1. SIZE OF FACTORY CABLE IS UNKNOWN. CONTRACTOR TO SIZE CONDUIT PER NEC REQUIREMENTS.

CITY OF SANTA CLARITA
BUILDING & SAFETY
APPROVED
Under SCMC Titles 18, 19, 20, 21, 24, 25
Sep 16, 2025
F. Svendsen
BLD25-00576 (ARCH)
The approved plans must be available at the construction site at all times. Changes or alterations to approved plans shall not be made without written permission from the City of Santa Clarita Building & Safety Division. The approval of these plans shall not be construed to permit or approve any violation of the applicable codes, ordinances, or other laws.

PACE
Advanced Water Engineering
17520 Newhope Street, Suite 200 | Fountain Valley, CA 92708
P: (714) 481-7300 | www.pacewater.com

REVIEWED BY: Luis Trujillo 09/30/2025 PM - DESIGN EXECUTION DATE
REVIEWED BY: Vince Nguyen 09/30/2025 PM - CONSTRUCTION EXECUTION DATE

IN ACCORDANCE WITH RESOLUTION No. 19-6, AS A RESOLUTION OF THE CITY COUNCIL OF THE CITY OF SANTA CLARITA DELEGATING DISCRETIONARY AUTHORITY TO THE DIRECTOR OF NEIGHBORHOOD SERVICES, CITY ENGINEER, AND ASSISTANT CITY ENGINEERS TO APPROVE PLANS AND DESIGNS FOR THE CONSTRUCTION OF OR IMPROVEMENTS TO PUBLIC PROPERTY FOR PURPOSES OF DESIGN IMMUNITY PURSUANT TO GOVERNMENT CODE SECTION 830.6 FOR THE CITY OF SANTA CLARITA, I DO HEREBY EXERCISE THE DISCRETION DELEGATED TO ME AND APPROVE THE PLAN OR DESIGN (WHICHEVER IS APPLICABLE) MODIFICATION TO THE PLAN OR DESIGN, OR A CONSTRUCTION OF, OR AN IMPROVEMENT TO THE PUBLIC FACILITY, STRUCTURE, OR PROPERTY TO WHICH THIS STATEMENT, MY SIGNATURE AND DATE IS AFFIXED.

LICENSED PROFESSIONAL ENGINEER
MASHAR WATE ISHAQ
E 24590
EXP. 06/30/27
ELECTRICAL
STATE OF CALIFORNIA

PREPARED BY ZIRANG SONG
R.C.E. NO. PROJECT ENGINEER # 69315
EXP. 06/30/2026
DRAWN J.P
SCALE
DESIGNED J.P
CHECKED Z.S
DATE 03/2025

TITLE
CABLE & CONDUIT SCHEDULES II

C258
NEWHALL PARK POOL
PUMP ROOM RENOVATION
PLANS (100% CD)
SANTA CLARITA CA

SHEET E5.1
51 OF 60 SHEETS
JOB NO. C258

R:\C258\Engineering\C258-04 (100% CD)\sheets\C258-04 E5.0.dwg - Tab: 51 - by pwoodergnost on 09/29/25 at 3:53:45 PM

Docusign Envelope ID: F28B5F90-223C-42A7-9ED1-4686B9540361

Xrefs: C258 Titleblock_ELEC.dwg
Dimscale = 40, LTscale = 1, PSltscale = 1, ACAD Ver. = 23.0s (LMS Tech), Varetain = 1

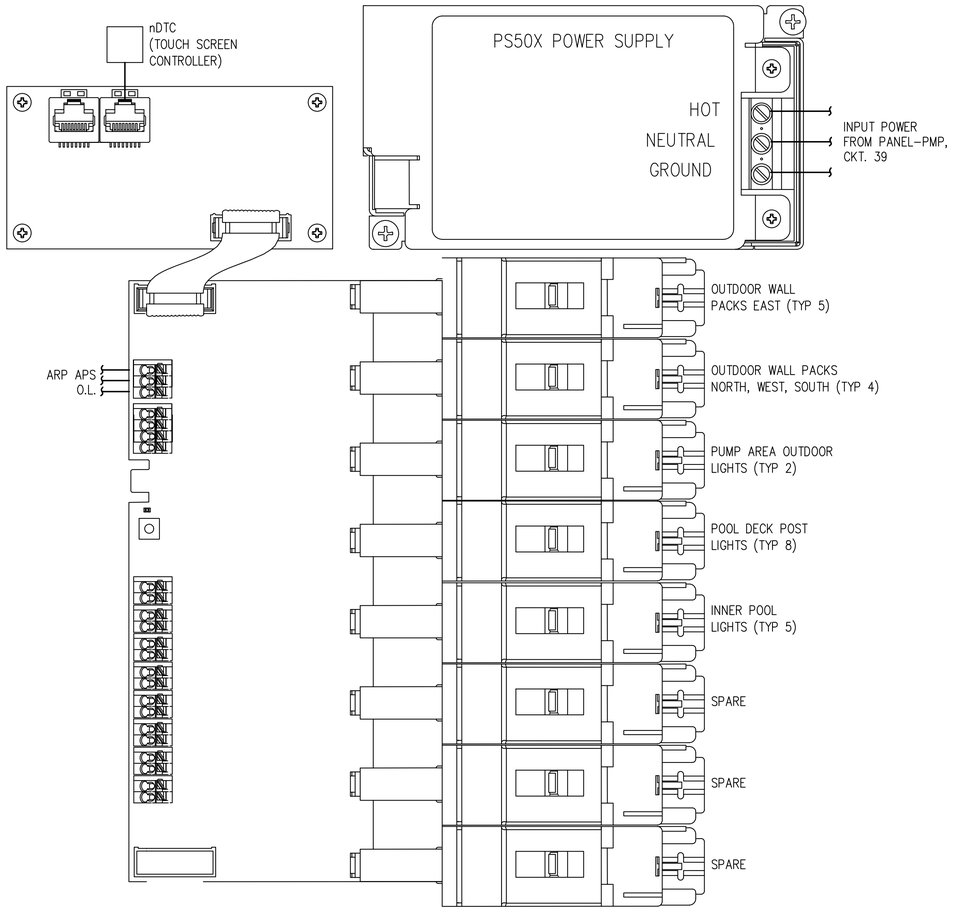

LIGHTING CONTROL PANEL WIRING SCHEMATIC
AND PANEL LAYOUT (120 VAC) FOR OUTDOOR LIGHTING
NTS

CONSTRUCTION NOTES

1. OUTDOOR LIGHTING CONTROL PANEL (LCP-A), 120-277 VAC, 1PH, 8 RELAYS, DIGITAL TIME CLOCK, ANALOG PHOTOSENSOR (WIRED TO PANEL MTD. OUTDOOR), NEMA 4X, PANEL DIMS: 14.41"H x 14.41"W x 4.05"D, MF'R: ACUITY BRANDS, PN ARP INTENC08 NLT-8FCR-MVOLT-SC-SM-DTC-ARPA APS OL (OR APPROVED EQUAL).

CITY OF SANTA CLARITA
BUILDING & SAFETY
APPROVED
Under SCMC Titles
18, 19, 20, 21, 24, 25
Sep 16, 2025
F. Svendsen
BLD25-00576 (ARCH)
The approved plans must be available at the construction site at all times. Changes or alterations to approved plans shall not be made without written permission from the City of Santa Clarita Building & Safety Division. The approval of these plans shall not be construed to permit or approve any violation of the applicable codes, ordinances, or other laws.

PACE
Advanced Water Engineering
17520 Newhope Street, Suite 200 | Fountain Valley, CA 92708
P: (714) 481-7300 | www.pacewater.com

REVIEWED BY: Luis Trujillo 09/30/2025 PM-DESIGN EXECUTION DATE
REVIEWED BY: 09/30/2025 PM-CONSTRUCTION EXECUTION DATE

IN ACCORDANCE WITH RESOLUTION No. 19-6, AS A RESOLUTION OF THE CITY COUNCIL OF THE CITY OF SANTA CLARITA DELEGATING DISCRETIONARY AUTHORITY TO THE DIRECTOR OF PUBLIC WORKS, DIRECTOR OF RECREATION AND COMMUNITY SERVICES, DIRECTOR OF NEIGHBORHOOD SERVICES, CITY ENGINEER, AND ASSISTANT CITY ENGINEERS TO APPROVE PLANS AND DESIGNS FOR THE CONSTRUCTION OF OR IMPROVEMENTS TO PUBLIC PROPERTY FOR PURPOSES OF DESIGN IMMUNITY PURSUANT TO GOVERNMENT CODE SECTION 830.6 AS AMENDED, I DO HEREBY EXERCISE THE POWERS DELEGATED TO ME BY THE ABOVE-REFERENCED RESOLUTION TO APPROVE THE PLAN OR DESIGN, OR ANY MODIFICATION TO THE PLAN OR DESIGN, OR A CONSTRUCTION OF, OR AN IMPROVEMENT TO THE PUBLIC FACILITY, STRUCTURE, OR PROPERTY TO WHICH THIS STATEMENT, MY SIGNATURE AND DATE IS AFFIXED.

LICENSED PROFESSIONAL ENGINEER
NASHAR MAKAR
EXP. 6/30/27
CIVIL
STATE OF CALIFORNIA

PREPARED BY
ZIRANG SONG
PROJECT ENGINEER
R.C.E. NO. # 63515
EXP: 06/30/25

ELEMENTARY CONTROL DIAGRAM

SCALE
DRAWN J.P
DESIGNED J.P
CHECKED Z.S
DATE 03/2025

TITLE

C258

NEWHALL PARK POOL
PUMP ROOM RENOVATION
PLANS (100% CD)
SANTA CLARITA CA

SHEET
E6.0
51 OF 60 SHEETS

JOB NO. C258

R:\C258\Engineering\C258-04 (100% CD)\sheets\C258-04 E6.0.dwg - Tab: 49 - by gerdenghost on 09/29/25 at 3:53:54 PM

Sep. 29, 2025

Docusign Envelope ID: F2885F90-229C-42A7-9ED1-4686B8540381

Xrefs: C258 Titleblock-ELEC.dwg
Dimscale = 1, LTscale = 1, PSltscale = 1, ACAD Ver. = 23.0s (LMS Tech), Visretain = 1

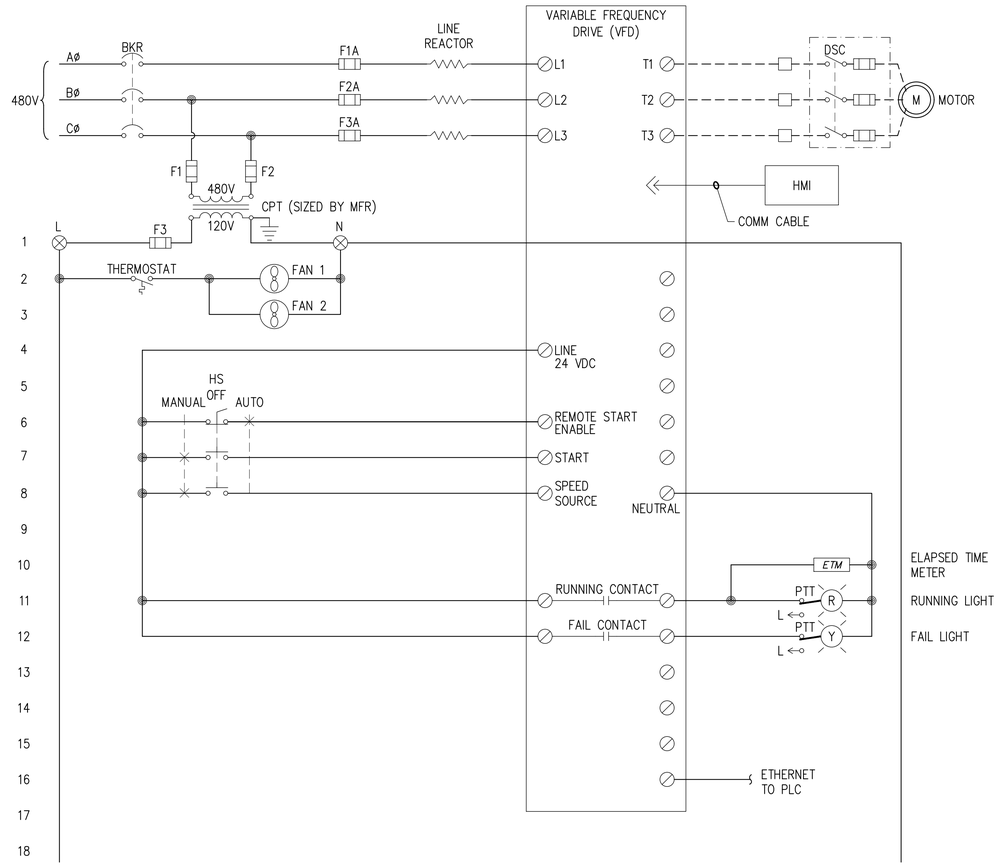

VERTICAL TURBINE POOL PUMP
CONTROL SCHEMATIC
NTS

LEGEND:

- ⊗ TERMINAL IN PLC
- ⊘ TERMINAL ON VFD
- ☐ TERMINAL IN FIELD

CITY OF SANTA CLARITA
BUILDING & SAFETY
APPROVED
Under SCMC Titles 18, 19, 20, 21, 24, 25
Sep 16, 2025
F. Svendsen
BLD25-00576 (ARCH)

The approved plans must be available at the construction site at all times. Changes or alterations to approved plans shall not be made without written permission from the City of Santa Clarita Building & Safety Division. The approval of these plans shall not be construed to permit or approve any violation of the applicable codes, ordinances, or other laws.

PACE
Advanced Water Engineering
17520 Newhope Street, Suite 200 | Fountain Valley, CA 92708
P: (714) 481-7300 | www.pacewater.com

REVIEWED BY: Mark Hewitt 09/30/2025
PM-DESIGN EXECUTION DATE

REVIEWED BY: Vincent Hernandez 09/30/2025
PM-CONSTRUCTION EXECUTION DATE

IN ACCORDANCE WITH RESOLUTION No. 19-6, AS A RESOLUTION OF THE CITY COUNCIL OF THE CITY OF SANTA CLARITA DELEGATING DISCRETIONARY AUTHORITY TO THE DIRECTOR OF PUBLIC WORKS, DIRECTOR OF RECREATION AND COMMUNITY SERVICES, DIRECTOR OF NEIGHBORHOOD SERVICES, CITY ENGINEER, AND ASSISTANT CITY ENGINEERS TO APPROVE PLANS AND DESIGNS FOR THE CONSTRUCTION OF OR IMPROVEMENTS TO PUBLIC PROPERTY FOR PURPOSES OF DESIGN IMMUNITY PURSUANT TO GOVERNMENT CODE SECTION 830.6 FOR THE CITY OF SANTA CLARITA, I DO HEREBY EXERCISE THE DISCRETION DELEGATED TO ME AND APPROVE THE PLAN OR DESIGN, OR AMENDMENT OR MODIFICATION TO THE PLAN OR DESIGN, OR A CONSTRUCTION OF, OR AN IMPROVEMENT TO THE PUBLIC FACILITY, STRUCTURE, OR PROPERTY TO WHICH THIS STATEMENT, MY SIGNATURE AND DATE IS AFFIXED.

LICENSED PROFESSIONAL ENGINEER
BASHAR MATE ISHAQ
E 24590
EXP. 06/30/27
ELECTRICAL
STATE OF CALIFORNIA

PREPARED BY ZIRANG SONG
PROJECT ENGINEER
R.C.E. NO. — # 69315
EXP. 06/30/2026
DRAWN J.P
SCALE
DESIGNED J.P
CHECKED Z.S
DATE 03/2025

TITLE
ELEMENTARY CONTROL DIAGRAM II

C258
NEWHALL PARK POOL
PUMP ROOM RENOVATION PLANS (100% CD)
SANTA CLARITA CA

SHEET
E6.1
53 OF 60 SHEETS
JOB NO. C258

Docusign Envelope ID: F28B5F90-223C-42A7-9ED1-46869B540361
Xrefs: C258 Titleblock_ELEC.dwg
Dimscale = 1; LTscale = 1; PSltscale = 1; ACAD Ver. = 23.0s (LMS Tech); Visretain = 1
R:\C258\Engineering\C258-04 (100% CD)\sheets\C258-04 E6.0.dwg - Tab: 53 - by jpenderghast on 09/29/25 at 3:53:54 PM

Sep. 29, 2025

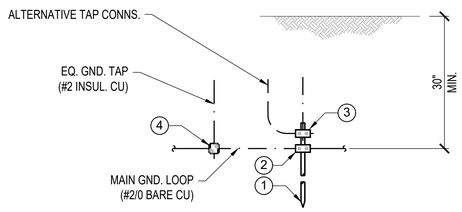

BILL OF MATERIALS		
NO.	DESCRIPTION	QTY
1	GROUND ROD, 3/4" DIA. x 10', COPPER-CLAD STEEL	1
2	GROUND ROD CONNECTOR (5/8"-3/4", 2/0 SOL-250) BURNDY #GAR6429 OR EQUAL.	1
3	GROUND ROD CONNECTOR (5/8"-3/4", #4 SOL-2/0) BURNDY #GAR6426 OR EQUAL.	1
4	GROUND CABLE CONNECTOR (#2/0-250 TO #4-#2/0) BURNDY #GX2926 OR EQUAL.	1

GROUND ROD INSTALLATION DETAIL — NTS — A

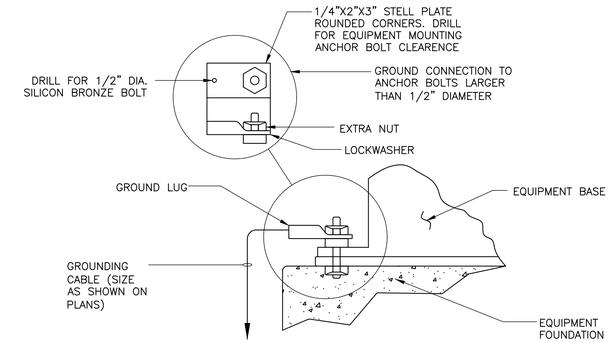

NOTE:
GROUND LUG SHALL BE BOLTED TO THE ANCHOR WITH A SECOND NUT AND LOCKWASHER. WHEN THE ANCHOR BOLT IS TOO LARGE FOR THE GROUND LUG A STEEL PLATE SHALL BE PROVIDED. DRILLED FOR ANCHOR BOLT CLEARANCE AND INSTALLED AS SHOWN WITH GROUND CONNECTOR BOLTED TO THE STEEL PLATE WITH 1/2" SILICONE BRONZE BOLT NUT AND FLAT WASHER.

EQUIPMENT GROUNDING DETAIL — NTS — B

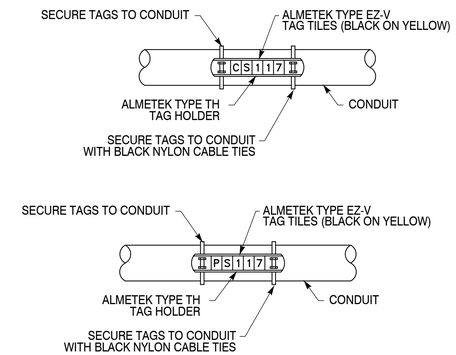

CONDUIT LABELING DETAIL — NTS — C

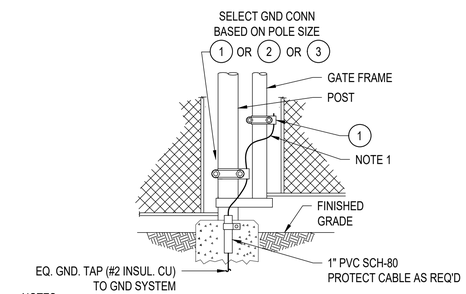

NOTES:
1. LEAVE SUFFICIENT SLACK IN CABLE FOR GATE SWING.

BILL OF MATERIALS		
NO.	DESCRIPTION	QTY
1	GROUND CONNECTOR, 1/C (1.25-2", #4-#4/0) BURNDY #GAR3903 OR EQUAL	1
2	GROUND CONNECTOR, 1/C, (2.5-3.5", #4-#4/0) BURNDY #GAR3904 OR EQUAL	1
3	GROUND CONNECTOR, 1/C, (6", #4-#4/0) BURNDY #GAR3906 OR EQUAL	1

GROUND TO FENCE DETAIL — NTS — D

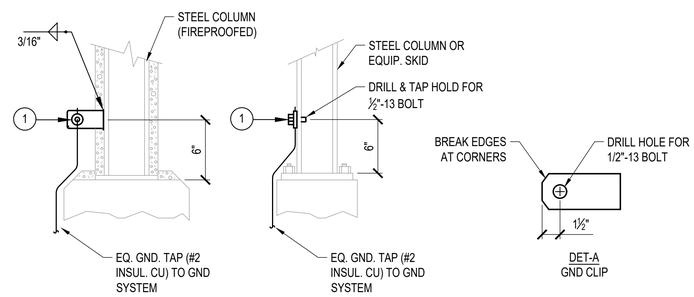

BILL OF MATERIALS		
NO.	DESCRIPTION	QTY
1	SERVIT POST CONNECTOR, 2/C, 1/2"-13 LONG STUD, #2-#2/0 W/ NUT & LOCKWASHER, BURNDY#K2C25B1	1
2	GROUND CLIP, MILD STEEL, 5" x 3" x 1/4" FIELD FABRICATE - SEE DET-A	1

EQUIPMENT STEEL/COLUMN GROUNDING DETAIL — NTS — E

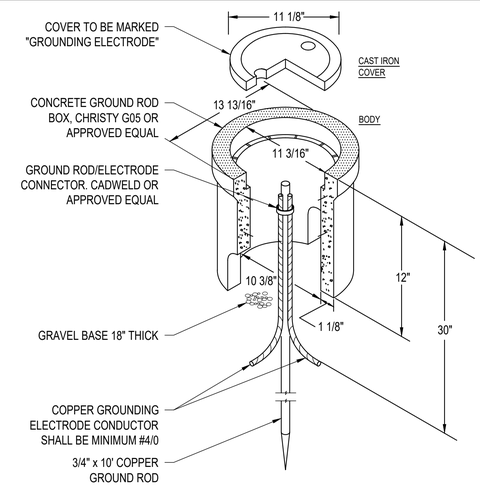

CONCRETE GROUND ROD INSPECTION DETAIL — NTS — F

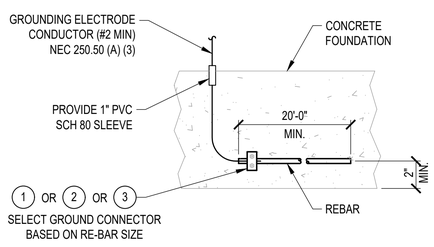

BILL OF MATERIALS		
NO.	DESCRIPTION	QTY
1	#4 RE-BAR, 1/2" DIA. - USE GND. CONN. BURNDY #GAR1126 OR EQUAL	1
2	#5 OR #6 RE-BAR, 5/8" or 3/4" DIA. - USE GND. CONN. BURNDY #GAR6426 OR EQUAL	1
3	#7 OR #8 RE-BAR, 7/8" or 1" DIA. - USE GND. CONN. BURNDY #GAR1426 OR EQUAL	1

GROUND BOND TO REBAR DETAIL — NTS — G

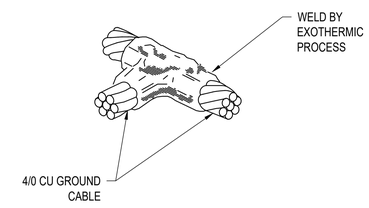

GROUND RING CONNECTION DETAIL — NTS — H

NOTES:
1. EQUIPMENT BASE TOP SHALL BE LEVEL.
2. PRIOR TO EQUIPMENT BASE INSTALLATION, COMPACT SOIL UNDER AND 6" BEYOND THE BASE TO 95% RELATIVE COMPACTION.
3. 3000 PSI MIN CONCRETE.

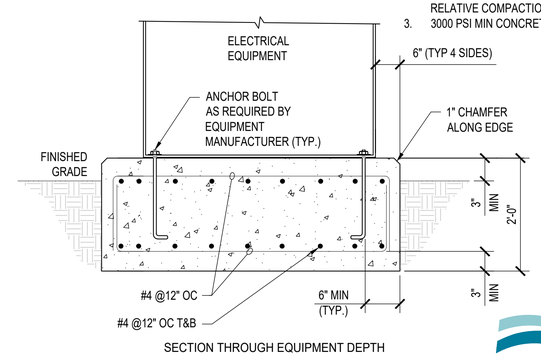

CITY OF SANTA CLARITA BUILDING & SAFETY
APPROVED
Under SCMC Titles 18, 19, 20, 21, 24, 25
Sep 16, 2025
F. Svendsen
BLD25-00576 (ARCH)
The approved plans must be available at the construction site at all times. Changes or alterations to approved plans shall not be made without written permission from the City of Santa Clarita Building & Safety Division. The approval of these plans shall not be construed to permit or approve any violation of the applicable codes, ordinances, or other laws.

TYPICAL EQUIPMENT PAD DETAIL — NTS — J

PACE
Advanced Water Engineering
17520 Newhope Street, Suite 200 | Fountain Valley, CA 92708
P: (714) 481-7300 | www.pacewater.com

REVIEWED BY:	09/30/2025
Lead Inspector	EXECUTION DATE
PM/ DESIGNER	
REVIEWED BY:	09/30/2025
PM - CONSTRUCTION	EXECUTION DATE

IN ACCORDANCE WITH RESOLUTION No. 19-6, AS A RESOLUTION OF THE CITY COUNCIL OF THE CITY OF SANTA CLARITA DELEGATING DISCRETIONARY AUTHORITY TO THE DIRECTOR OF PUBLIC WORKS, DIRECTOR OF RECREATION AND COMMUNITY SERVICES, DIRECTOR OF NEIGHBORHOOD SERVICES, AND ASSISTANT CITY ENGINEERS TO APPROVE PLANS AND DESIGNS FOR THE CONSTRUCTION OF OR IMPROVEMENTS TO PUBLIC PROPERTY FOR PURPOSES OF DESIGN IMMUNITY PURSUANT TO GOVERNMENT CODE SECTION 830.6 FOR THE CITY OF SANTA CLARITA, I DO HEREBY EXERCISE THE DELEGATED AUTHORITY TO THE ABOVE-NAMED PERSONS TO APPROVE THE PLAN OR DESIGN, OR MODIFICATION TO THE PLAN OR DESIGN, OR A CONSTRUCTION OF, OR AN IMPROVEMENT TO THE PUBLIC FACILITY, STRUCTURE, OR PROPERTY TO WHICH THIS STATEMENT, MY SIGNATURE AND DATE IS AFFIXED.

LICENSED PROFESSIONAL ENGINEER
MASHAR WATE ISHAQ
E 24590
EXP. 06/30/27
ELECTRICAL
STATE OF CALIFORNIA

PREPARED BY	
ZIRANG SONG	PROJECT ENGINEER
R.C.E. NO.	# 69315
EXP.	06/30/2026
DRAWN J.P	SCALE
DESIGNED J.P	
CHECKED Z.S	DATE 03/2025

TITLE ELECTRICAL DETAILS I

C258 NEWHALL PARK POOL
PUMP ROOM RENOVATION
PLANS (100% CD)
SANTA CLARITA CA

SHEET E7.0
54 OF 60 SHEETS

JOB NO. C258

Docusign Envelope ID: F28B5F90-2230-42A7-9ED1-46869B540361
Xrefs: C258 Titleblock_ELEC.dwg
Dimscale = 10, LTscale = 1, PSltscale = 1, ACAD Ver. = 23.0s (LMS Tech), Viewtem = 1
R:\C258\Engineering\C258-04 (100% CD)\sheets\C258-04 E7.0.dwg - Tab: 54 - by gerardgrost on 09/29/25 at 3:53:59 PM

Sep. 29, 2025

NOTES:
1. PROVIDE CONCRETE ENCASEMENT FOR CONDUITS UNDERGROUND.
2. PROVIDE APPROXIMATELY 18" SEPARATION FROM CONTROL AND POWER CONDUIT STUB-UPS.

CITY OF SANTA CLARITA
BUILDING & SAFETY
APPROVED
Under SCMC Titles 18, 19, 20, 21, 24, 25
Sep 16, 2025
F. Svendsen
BLD25-00576 (ARCH)
The approved plans must be available at the construction site at all times. Changes or alterations to approved plans shall not be made without written permission from the City of Santa Clarita Building & Safety Division. The approval of these plans shall not be construed to permit or approve any violation of the applicable codes, ordinances, or other laws.

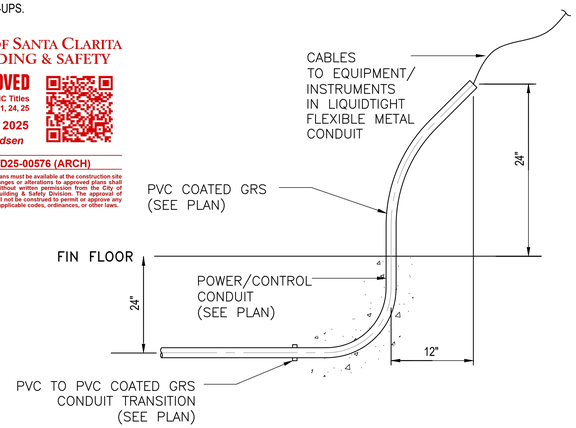

TYPICAL CONDUIT STUB UP DETAIL — NTS — A

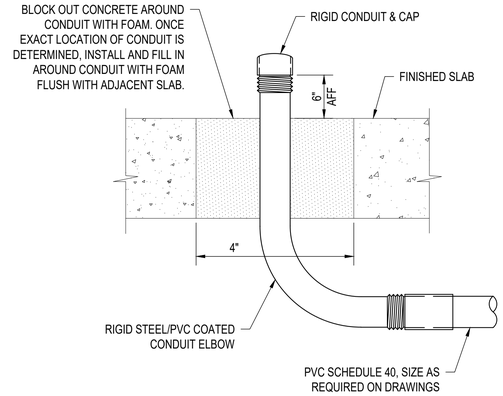

TYPICAL CONDUIT STUB-UP DETAIL FOR FUTURE INSTALLATIONS — NTS — B

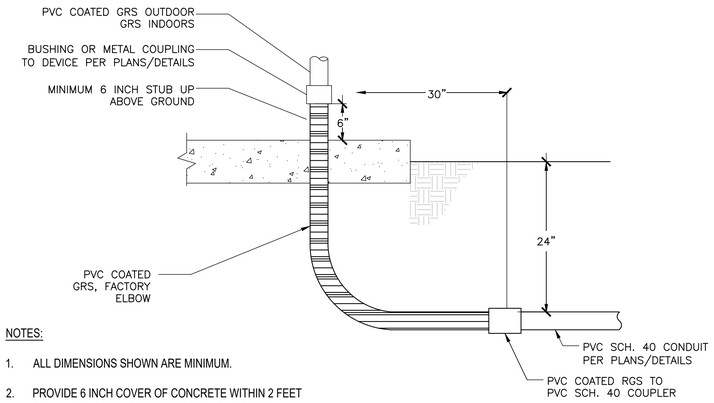

NOTES:
1. ALL DIMENSIONS SHOWN ARE MINIMUM.
2. PROVIDE 6 INCH COVER OF CONCRETE WITHIN 2 FEET OF ALL DRIVABLE AREAS PER DETAILS AND PLAN.

TYPICAL CONDUIT TRANSITION DETAIL — NTS — C

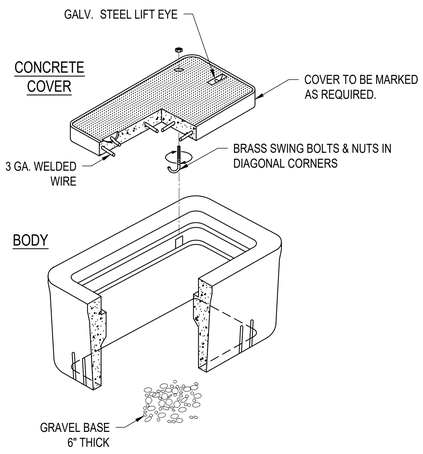

NOTES:
1. CONCRETE PULLBOX, CHRISTY, JENSEN OR APPROVED EQUIVALENT. PULLBOX TO BE APPROPRIATE SIZE FOR NUMBER AND SIZE OF CONDUITS ENTERING AND EXITING. PROVIDE EXTENSIONS AS REQUIRED FOR DEPTH.
2. IN UNPAVED AREAS, PROVIDE CONCRETE COLLAR AROUND PULLBOX, 6" MIN. WIDE BY 6" MIN. DEEP.
3. ALL CONDUITS WITHIN THE PULLBOX ARE TO BE SEALED WITH RTV DUCT SEAL TO PREVENT WATER ENTERING CONDUIT SYSTEM.
4. ALL CONDUCTORS AND CABLES ARE TO BE GROUPED AND WIRE TIED EVERY 6" PER CONDUIT FILL.
5. ALL SPLICES WITHIN THE PULLBOX ARE TO BE SEALED WITH AN INSULATING AND ENCAPSULATING RESIN PACK, SCOTCHCAST 4 OR EQUAL

CONCRETE PULLBOX DETAIL — NTS — D

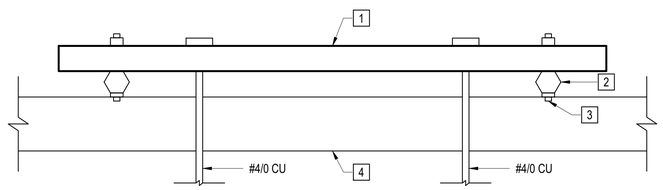

NOTES:
1. 4" W X 1/4" D X 24" L,GROUNDING BUSBAR, COPPER, MOUNTED 12" AFF.
2. STANDOFF INSULATOR AS REQUIRED.
3. WALL ANCHOR.
4. BUILDING WALL.
5. GROUNDING ELECTRODE CONDUCTOR(S) SHALL BE INSTALLED IN ONE CONTINUOUS LENGTH, WITH A SPLICE OR JOINT BEING MADE ONLY BY IRREVERSIBLE COMPRESSION TYPE CONNECTORS LISTED AS GROUNDING AND BONDING EQUIPMENT OR BY EXOTHERMIC WELDING, PER NEC 250.64(C)1

GROUNDING BUS BAR DETAIL — NTS — E

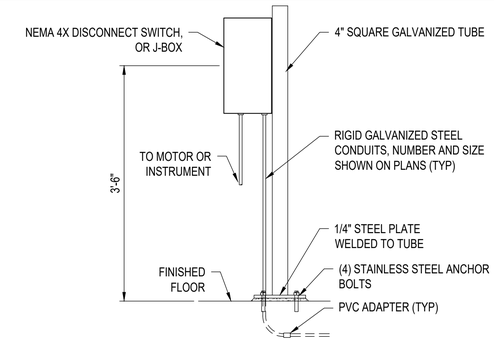

NOTES:
1. DISCONNECT SWITCH OR J-BOX SHALL BE NEMA-4X WHEN OUTSIDE AND NEMA 12 STEEL WHEN INSIDE.
2. ENCLOSURES SHALL BE LABELED WITH THEIR CIRCUIT LOCATION AND DEVICE NAME WITH PERMANENT WEATHERPROOF LABELS.
3. MAINTAIN MINIMUM 3 FEET 6 INCHES CLEAR DISTANCE AND REQUIRED WORKING SPACE PER NEC 110.26.
4. DISCONNECT SWITCHES SHALL BE HEAVY DUTY, 600V AND SIZED PER THE SINGLE LINE DIAGRAM.
5. DISCONNECT SWITCHES SHALL BE FUSED WITH LPJ RATED FUSES FOR AIC RATING COMPLIANCE FOR MORE THAN 10 KAIC AND EQUIPMENT PROTECTION.
6. CONDUITS SHALL BE ROUTED AS SUCH THAT THEY DO NOT CREATE A TRIPPING HAZARD.
7. INSTALL ALL ENCLOSURES PER MANUFACTURER REQUIREMENTS AND GROUND/BOND PER CODE.

DISCONNECT SWITCH/J-BOX DETAIL — NTS — F

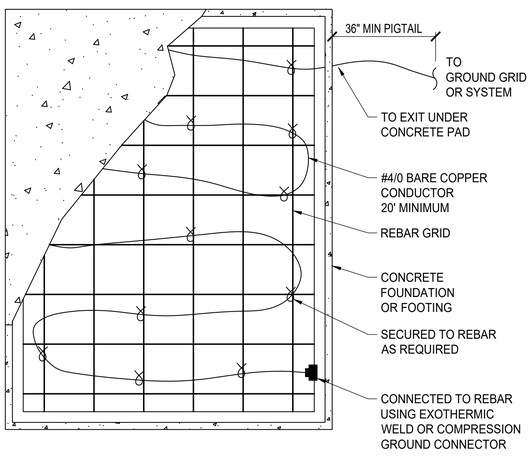

"UFER" GROUNDING DETAIL — NTS — G

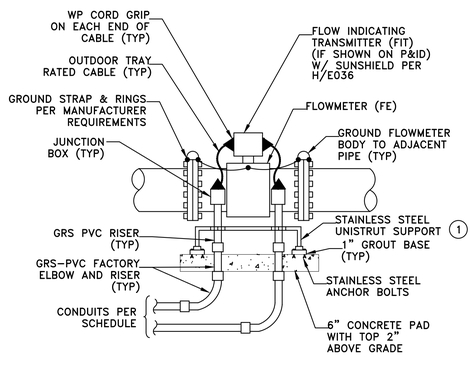

NOTES: 1 SUPPORT WITH TWO HOLE BASE ON EACH SIDE AND HEIGHT OF HORIZONTAL UNISTRUT SUPPORT TO BE 12" MINIMUM.

FLOW METER GROUNDING DETAIL — NTS — H

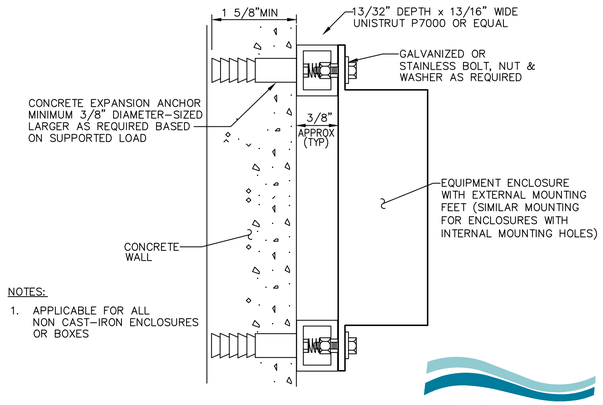

NOTES:
1. APPLICABLE FOR ALL NON CAST-IRON ENCLOSURES OR BOXES

EQUIPMENT ENCLOSURE MOUNTING ON CONCRETE WALL DETAIL — NTS — J

PACE
Advanced Water Engineering
17520 Newhope Street, Suite 200 | Fountain Valley, CA 92708
P: (714) 481-7300 | www.pacewater.com

REVIEWED BY: Lidia Tirado, PM/DESIGNER, 09/30/2025, EXECUTION DATE
REVIEWED BY: Nick Rizzo, PM-CONSTRUCTION, 09/30/2025, EXECUTION DATE

IN ACCORDANCE WITH RESOLUTION No. 19-6, AS A RESOLUTION OF THE CITY COUNCIL OF THE CITY OF SANTA CLARITA DELEGATING DISCRETIONARY AUTHORITY TO THE DIRECTOR OF PUBLIC WORKS, DIRECTOR OF RECREATION AND COMMUNITY SERVICES, DIRECTOR OF NEIGHBORHOOD SERVICES, CITY ENGINEER, AND ASSISTANT CITY ENGINEERS TO APPROVE PLANS AND DESIGNS FOR THE CONSTRUCTION OF OR IMPROVEMENTS TO PUBLIC PROPERTY FOR PURPOSES OF DESIGN IMMUNITY PURSUANT TO GOVERNMENT CODE SECTION 830.6 FOR THE CITY OF SANTA CLARITA, I DO HEREBY EXERCISE THE DELEGATED AUTHORITY TO APPROVE THE PLAN OR DESIGN, OR A CONSTRUCTION, OR AN IMPROVEMENT, OR MODIFICATION TO THE PLAN OR DESIGN, OR A CONSTRUCTION, OR AN IMPROVEMENT TO THE PUBLIC FACILITY, STRUCTURE, OR PROPERTY TO WHICH THIS STATEMENT, MY SIGNATURE AND DATE IS AFFIXED.

LICENSED PROFESSIONAL ENGINEER — MASHAR WATE ISHAQ — E 24590 — EXP. 06/30/27 — ELECTRICAL — STATE OF CALIFORNIA

PREPARED BY: ZIRANG SONG
R.C.E. NO. / PROJECT ENGINEER: # 69515
EXP: 06/30/2026
DATE: 03/2025
DRAWN: J.P
DESIGNED: J.P
CHECKED: Z.S
SCALE:

TITLE: ELECTRICAL DETAILS II

C258 NEWHALL PARK POOL
PUMP ROOM RENOVATION
PLANS (100% CD)
SANTA CLARITA CA

SHEET E7.1
55 OF 60 SHEETS
JOB NO. C258

Docusign Envelope ID: F28B5F90-223C-42A7-9ED1-4686B8540361
Xrefs: C258 Titleblock_ELEC.dwg
Dimscale = 10, LTscale = 1, PSltscale = 1, ACAD Ver. = 23.0s (LMS Tech), Viewtem = 1
R:\C258\Engineering\C258-04 (100% CD)\sheets\C258-04 E7.1.dwg - Tab: 55 - by jpenderghast on 09/29/25 at 3:54:03 PM

Sep. 29, 2025

NOTES:

1. CONDUIT PLACEMENT/SPACING IN THE CMU WALL SHALL BE DONE IN A MANNER THAT DOES NOT AFFECT THE STRUCTURAL INTEGRITY OF THE WALL AND MAINTAINS COMPLIANCE WITH BUILDING STRUCTURAL CODES.
2. BOXES IN CONDITIONED AREAS SHALL BE FLUSH WITH THE WALL AND INSTALLED PER NEC 314.19 AND 314.20.
3. CONDUITS CONCEALED IN CMU WALLS SHALL BE PVC SCH. 40, MINIMUM SIZE 3/4", AND ENCASED IN CONCRETE.

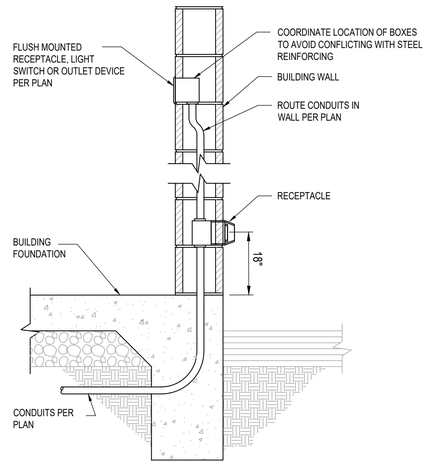

CONDUITS/OUTLETS IN MASONRY WALL DETAIL — NTS — A

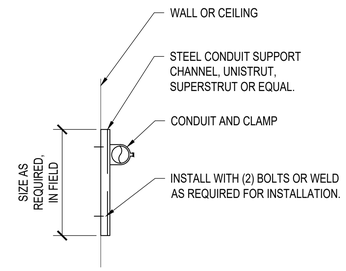

CONDUIT SUPPORT DETAIL — NTS — B

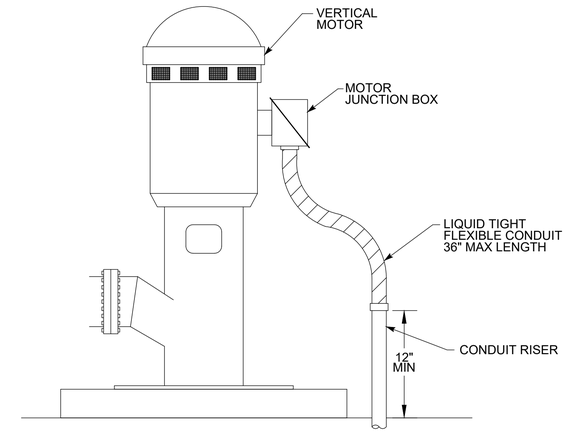

VERTICAL MOTOR CONNECTION DETAIL — NTS — C

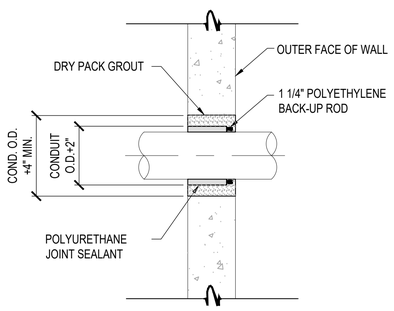

MASONRY WALL CONDUIT PENETRATION - ABOVE GROUND — NTS — D

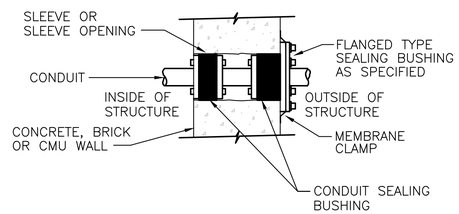

NOTE:

1. FLANGED TYPE CONDUIT PENETRATION SEALANT SHALL BE USED WHERE INDICATED ON THE PLANS.

CONDUIT PENETRATION THROUGH WALL - FLANGE TYPE — NTS — E

NOT USED — F

NOT USED — G

NOT USED — H

NOT USED — J

CITY OF SANTA CLARITA BUILDING & SAFETY
APPROVED
Under SCMC Titles 18, 19, 20, 21, 24, 25
Sep 16, 2025
F. Svendsen
BLD25-00576 (ARCH)
The approved plans must be available at the construction site at all times. Changes, additions or revisions to the plans may not be made without written permission from the City of Santa Clarita Building & Safety Division. The approval of these plans shall not be construed to permit or approve any violation of the applicable codes, ordinances, or other laws.

PACE Advanced Water Engineering
17520 Newhope Street, Suite 200 | Fountain Valley, CA 92708
P: (714) 481-7300 | www.pacewater.com

REVIEWED BY Luis Trujillo PM - DESIGN	09/30/2025	EXECUTION DATE
REVIEWED BY Zirang Song PM - CONSTRUCTION	09/30/2025	EXECUTION DATE

IN ACCORDANCE WITH RESOLUTION No. 19-6, AS A RESOLUTION OF THE CITY COUNCIL OF THE CITY OF SANTA CLARITA DELEGATING DISCRETIONARY AUTHORITY TO THE DIRECTOR OF PUBLIC WORKS, DIRECTOR OF RECREATION AND COMMUNITY SERVICES, DIRECTOR OF NEIGHBORHOOD SERVICES, CITY ENGINEER, AND ASSISTANT CITY ENGINEERS TO APPROVE PLANS AND DESIGNS FOR THE CONSTRUCTION OF OR IMPROVEMENTS TO PUBLIC PROPERTY FOR PURPOSES OF DESIGN IMMUNITY PURSUANT TO GOVERNMENT CODE SECTION 830.6 FOR THE CITY OF SANTA CLARITA, I DO HEREBY EXERCISE THE DISCRETION DELEGATED TO ME AND APPROVE THE PLAN OR DESIGN, PLACEMENT, OR MODIFICATION TO THE PLAN OF DESIGN, OR A CONSTRUCTION OF, OR AN IMPROVEMENT TO THE PUBLIC FACILITY, STRUCTURE, OR PROPERTY TO WHICH THIS STATEMENT, MY SIGNATURE AND DATE IS AFFIXED.

LICENSED PROFESSIONAL ENGINEER
MASHAR WATE YASIN
E 24590
EXP. 06/30/27
ELECTRICAL
STATE OF CALIFORNIA

PREPARED BY ZIRANG SONG			
R.C.E. NO.	PROJECT ENGINEER # 69315		
EXP.	06/30/2026		
DRAWN J.P	SCALE		
DESIGNED J.P			
CHECKED Z.S	DATE 03/2025		

TITLE **ELECTRICAL DETAILS III**

C258 **NEWHALL PARK POOL**
PUMP ROOM RENOVATION
PLANS (100% CD)
SANTA CLARITA *CA*

SHEET **E7.2**
56 OF 60 SHEETS

JOB NO. C258

Docusign Envelope ID: F28B5F90-223C-42A7-9ED1-46868B540381
Xrefs: C258 Titleblock_EIEC.dwg
Dmscale = 10, LTscale = 1, PSltscale = 1, ACAD Ver. = 23.0s (LMS Tech), Viewtan = 1
R:\C258\Engineering\C258-04 (100% CD)\sheets\C258-04 E7.2.dwg - Tab: 56 - by jpendergrass on 09/29/25 at 3:54:08 PM

STATE OF CALIFORNIA

Indoor Lighting

CALIFORNIA ENERGY COMMISSION

CERTIFICATE OF COMPLIANCE — **NRCC-LTI-E**

This document is used to demonstrate compliance with requirements in 110.9, 110.12(c), 130.0, 130.1, 140.6 and 141.0(b)2 for indoor lighting scopes using the prescriptive path for nonresidential and hotel/motel occupancies. It is also used to document compliance with requirements in 160.5, 170.2(e) and 180.2(b)4 for indoor lighting scopes using the prescriptive path for multifamily occupancies. Multifamily includes dormitory and senior living facilities.

Project Name:	C258 Newhall Park	**Report Page:**	**(Page 1 of 8)**
Project Address:	24923 Newhall Ave, Santa Clarita, CA 91321	**Date Prepared:**	2025-05-05T12:36:39-04:00

A. GENERAL INFORMATION

01	Project Location (city)	Santa Clarita, CA	04	Total Conditioned Floor Area (ft^2)	0
02	Climate Zone	9	05	Total Unconditioned Floor Area (ft^2)	1,132.21
03	Occupancy Types Within Project (select all that apply):		06	# of Stories (Habitable Above Grade)	1

- Commercial Industrial

B. PROJECT SCOPE

This table includes any lighting systems that are within the scope of the permit application and are demonstrating compliance using the prescriptive path outlined in 140.6 / 170.2(e) or 141.0(b)2 / 180.2(b)4 for alterations.

Scope of Work	Conditioned Spaces		Unconditioned Spaces	
01	02	03	04	05
My Project Consists of (check all that apply):	Calculation Method	Area (ft^2)	Calculation Method	Area (ft^2)
☒ New Lighting System	N/A	0	Area Category Method	1132.21
☐ New Lighting System - Parking Garage	N/A	0	N/A	0
Total Area of Work (ft^2)			1132.21	

STATE OF CALIFORNIA

Indoor Lighting

CALIFORNIA ENERGY COMMISSION

CERTIFICATE OF COMPLIANCE — **NRCC-LTI-E**

Project Name:	C258 Newhall Park	**Report Page:**	**(Page 2 of 8)**
		Date Prepared:	2025-05-05T12:36:39-04:00

C. COMPLIANCE RESULTS

If any cell on this table says "DOES NOT COMPLY" or "COMPLIES with Exceptional Conditions" refer to Table D. for guidance.

Lighting in conditioned and unconditioned spaces must not be combined for compliance per 140.6(b)1 / 170.2(e)	Allowed Lighting Power per 140.6(b) / 170.2(e) (Watts)						Adjusted Lighting Power per 140.6(a) / 170.2(e) (Watts)			Compliance Results
	01	02	03	04		05	06	07	08	09
	Complete Building 140.6(c)1	Area Category 140.6(c)2 / 170.2(e)4	Area Category Additional 140.6(c)2G / 170.2(e)4Av (+)	Tailored 140.6(c)3 / 170.2(e)4B (+)	=	**Total Allowed** (Watts)	≥ Total Designed (Watts)	Adjustments PAF Lighting Control Credits 140.6(a)2 / 170.2(e)1B (-)	= **Total Adjusted** (Watts) *Includes Adjustments	**05 must be >= 08 140.6 / 170.2(e)**
	(See Table I)	(See Table I)	(See Table J)	(See Table K)			(See Table F)	(See Table P)		
Conditioned					=		≥		=	
Unconditioned		603.97			=	603.97	≥ 555		= 555	COMPLIES
Controls Compliance (See Table H for Details)										COMPLIES
Rated Power Reduction Compliance (See Table Q for Details)										

D. EXCEPTIONAL CONDITIONS

This table is auto-filled with uneditable comments because of selections made or data entered in tables throughout the form.

E. ADDITIONAL REMARKS

This table includes remarks made by the permit applicant to the Authority Having Jurisdiction.

STATE OF CALIFORNIA

Indoor Lighting

CALIFORNIA ENERGY COMMISSION

CERTIFICATE OF COMPLIANCE — **NRCC-LTI-E**

Project Name:	C258 Newhall Park	**Report Page:**	**(Page 3 of 8)**
		Date Prepared:	2025-05-05T12:36:39-04:00

F. INDOOR LIGHTING FIXTURE SCHEDULE

This table includes all planned permanent and portable lighting other than dwelling unit/ hotel/ motel room lighting. Multifamily dwelling unit and hotel/motel room lighting is documented in Table T. If using Table T to document lighting in multifamily common use areas providing shared provisions for living, eating, cooking or sanitation, those luminaires are not included here.

Designed Wattage: Unconditioned Spaces

01	02	03	04	05	06	07	08	09	10	
Name or Item Tag	Complete Luminaire Description	Modular (Track) Fixture	Small Aperture & Color Change[1]	Watts per luminaire[2]	How is Wattage determined	Total Number of Luminaires	Excluded per 140.6(a)3 / 170.2(e)2C	Design Watts	Field Inspector	
									Pass	Fail
Linear Washdown 2 FT	RAB Shark 2 FT, 120V, 25W	No	NA	25	Mfr. Spec	5	No	125	☐	☐
Linear Washdown 4 FT	RAB Shark 4 FT, 120V, 50W	No	NA	50	Mfr. Spec	3	No	150	☐	☐
Linear Washdown 8 FT	RAB Shark 8 FT, 120V, 70W	No	NA	70	Mfr. Spec	4	No	280	☐	☐
Egress Sign	Exit Sign with Integrated Lights, 120V, 20W	No	NA	20	Mfr. Spec	2	Exempt	---	☐	☐
Total Designed Watts: UNCONDITIONED SPACES								555		

[1]*FOOTNOTE: Design Watts for small aperture and color changing luminaires which qualify per 140.6(a)4B / 170.2(e)2D is adjusted to be 75% /80% of their rated wattage. Table F automatically makes this adjustment, the permit applicant should enter full rated wattage in column 05.*

[2]*Authority Having Jurisdiction may ask for Luminaire cut sheets to confirm wattage used for compliance per 130.0(c) / 160.5(b). Wattage used must be the maximum rated for the luminaire, not the lamp.*

G. MODULAR LIGHTING SYSTEMS

This section does not apply to this project.

STATE OF CALIFORNIA

Indoor Lighting

CALIFORNIA ENERGY COMMISSION

CERTIFICATE OF COMPLIANCE — **NRCC-LTI-E**

Project Name:	C258 Newhall Park	**Report Page:**	**(Page 4 of 8)**
		Date Prepared:	2025-05-05T12:36:39-04:00

H. INDOOR LIGHTING CONTROLS (Not including PAFs)

This table includes lighting controls for conditioned and unconditioned spaces.

Building Level Controls

01	02	03	
Mandatory Demand Response 110.12(c)	Shut-off controls 130.1(c) / 160.5(b)4C	Field Inspector	
		Pass	Fail
NA < 4,000W subject to multilevel	See Area/Space Level Controls	☐	☐

Area Level Controls

04	05	06	07	08	09	10	11	12	
Area Description	Complete Building or Area Category Primary Function Area	Manual Area Controls 130.1(a) / 160.5(b)4A	Multi-Level Controls 130.1(b) / 160.5(b)4B	Shut-Off Controls 130.1(c) // 160.5(b)4C	Primary/Sky lit Daylighting 130.1(d) / 160.5(b)4D	Secondary Daylighting 130.1(d) / 160.5(b)4D	Interlocked Systems 140.6(a)1/ 170.2(e)2A	Field Inspector	
								Pass	Fail
Acid Storage Room	General Commercial Industrial Work AreaLow Bay	Readily Accessible	NA: General Ltg <= 0.5W/SF	Occupancy Sensor	NA: Not daylit zone	NA: Not daylit zone	No	☐	☐
Chlorine Storage Room	General Commercial Industrial Work AreaLow Bay	Readily Accessible	NA: General Ltg <= 0.5W/SF	Occupancy Sensor	NA: Not daylit zone	NA: Not daylit zone	No	☐	☐
Calcium Hypochlorite & Bicarb Storage Room	General Commercial Industrial Work AreaLow Bay	Readily Accessible	NA: General Ltg <= 0.5W/SF	Occupancy Sensor	NA: Not daylit zone	NA: Not daylit zone	No	☐	☐
Dry Acid & Soda Ash Storage Room	General Commercial Industrial Work AreaLow Bay	Readily Accessible	NA: General Ltg <= 0.5W/SF	Occupancy Sensor	NA: Not daylit zone	NA: Not daylit zone	No	☐	☐
Emergency Eyewash/Shower Room	General Commercial Industrial Work AreaLow Bay	Readily Accessible	NA: General Ltg <= 0.5W/SF	Occupancy Sensor	NA: Not daylit zone	NA: Not daylit zone	No	☐	☐
Pump Station Room	General Commercial Industrial Work AreaLow Bay	Readily Accessible	NA: General Ltg <= 0.5W/SF	NA: Elec. equip. rm	NA: Not daylit zone	NA: Not daylit zone	No	☐	☐
Storage Room	Commercial Industrial Storage Area	Readily Accessible	NA: General Ltg <= 0.5W/SF	Occupancy Sensor	NA: Not daylit zone	NA: Not daylit zone	No	☐	☐

CITY OF SANTA CLARITA
BUILDING & SAFETY
APPROVED
Under SCMC Titles 18, 19, 20, 21, 24, 25
Sep 16, 2025
F. Svendsen
BLD25-00576 (ARCH)
The approved plans must be available at the construction site at all times. Changes or alterations to approved plans shall not be made without written permission from the City of Santa Clarita Building & Safety Division. The approval of these plans shall not be construed to permit or approve any violation of the applicable codes, ordinances, or other laws.

PACE
Advanced Water Engineering
17520 Newhope Street, Suite 200 | Fountain Valley, CA 92708
P: (714) 481-7300 | www.pacewater.com

REVIEWED BY: Luke Newhall — PM/DESIGN — 09/30/2025 — EXECUTION DATE
REVIEWED BY: — PM-CONSTRUCTION — 09/30/2025 — EXECUTION DATE

IN ACCORDANCE WITH RESOLUTION No. 19-6, AS A RESOLUTION OF THE CITY COUNCIL OF THE CITY OF SANTA CLARITA DELEGATING DISCRETIONARY AUTHORITY TO THE DIRECTOR OF PUBLIC WORKS, DIRECTOR OF RECREATION AND COMMUNITY SERVICES, DIRECTOR OF NEIGHBORHOOD SERVICES, CITY ENGINEER, AND ASSISTANT CITY ENGINEERS TO APPROVE PLANS AND DESIGNS FOR THE CONSTRUCTION OF OR IMPROVEMENTS TO PUBLIC PROPERTY FOR PURPOSES OF DESIGN IMMUNITY PURSUANT TO GOVERNMENT CODE SECTION 830.6 AS SET FORTH IN CITY COUNCIL RESOLUTION NO. 19-6, I, AS HEREIN EXERCISE THE DISCRETION VESTED IN ME BY THE CITY TO APPROVE THE PLAN OR DESIGN OR MODIFICATION TO THE PLAN OR DESIGN, OR A CONSTRUCTION OF, OR AN IMPROVEMENT TO THE PUBLIC FACILITY, STRUCTURE, OR PROPERTY TO WHICH THIS STATEMENT, MY SIGNATURE AND DATE IS AFFIXED.

LICENSED PROFESSIONAL ENGINEER — MATTHEW A. ZIRANG — EXP. 06/30/27 — CIVIL — STATE OF CALIFORNIA

TITLE 24 INDOOR LIGHTING FORM

PREPARED BY: ZIRANG SONG — PROJECT ENGINEER — R.C.E. NO. # 69315 — EXP: 06/30/27
DRAWN: J.P — SCALE: — DESIGNED: J.P — CHECKED: Z.S — DATE: 03/2025

TITLE

C258 **NEWHALL PARK POOL**
PUMP ROOM RENOVATION PLANS (100% CD)
SANTA CLARITA CA

SHEET **E8.0**
56 OF 60 SHEETS

JOB NO. C258

Sep. 29, 2025
Docusign Envelope ID: F28B5F90-223C-42A7-9ED1-4686B8540361
Xrefs: C258 Titleblock_ELEC.dwg
Dimscale = 1, LTscale = 1, PSltscale = 1, ACAD Ver. = 23.0s (LMS Tech), Visretain = 1
R:\C258\Engineering\C258-04 (100% CD)\Sheets\C258-04 E8.0.dwg - Tab: E4 - by jpondergrost on 09/29/25 at 3:54:33 PM

Sep. 29, 2025

STATE OF CALIFORNIA
Indoor Lighting
CALIFORNIA ENERGY COMMISSION

CERTIFICATE OF COMPLIANCE			NRCC-LTI-E
Project Name:	C258 Newhall Park	**Report Page:**	(Page 5 of 8)
		Date Prepared:	2025-05-05T12:36:39-04:00

H. INDOOR LIGHTING CONTROLS (Not including PAFs)

	13
	Plan Sheet Showing Daylit Zones:

I. LIGHTING POWER ALLOWANCE: COMPLETE BUILDING OR AREA CATEGORY METHODS

Each area complying using the Complete Building or Area Category Methods per 140.6(b) are included in this table. Column 06 indicates if additional lighting power allowances per 140.6(c) or adjustments per 140.6(a) are being used .

Unconditioned Spaces

01	02	03	04	05	06	
Area Description	Complete Building or Area Category Primary Function Area	Allowed Density (W/ft^2)	Area (ft^2)	Allowed Wattage (Watts)	Additional Allowance / Adjustment	
					Area Category	PAF
Acid Storage Room	General Commercial Industrial Work AreaLow Bay	0.6	58.64	35.18	No	No
Chlorine Storage Room	General Commercial Industrial Work AreaLow Bay	0.6	53.73	32.24	No	No
Calcium Hypochlorite & Bicarb Storage Room	General Commercial Industrial Work AreaLow Bay	0.6	53.73	32.24	No	No
Dry Acid & Soda Ash Storage Room	General Commercial Industrial Work AreaLow Bay	0.6	58.64	35.18	No	No
Emergency Eyewash/Shower Room	General Commercial Industrial Work AreaLow Bay	0.6	51.45	30.87	No	No
Pump Station Room	General Commercial Industrial Work AreaLow Bay	0.6	479.27	287.56	No	No
Storage Room	Commercial Industrial Storage Area	0.4	376.75	150.7	No	No
		TOTALS:	1,132.21	603.97	See Tables J, or P for detail	

J. ADDITIONAL ALLOWANCE: AREA CATEGORY METHOD QUALIFYING LIGHTING SYSTEM

This section does not apply to this project.

STATE OF CALIFORNIA
Indoor Lighting
CALIFORNIA ENERGY COMMISSION

CERTIFICATE OF COMPLIANCE			NRCC-LTI-E
Project Name:	C258 Newhall Park	**Report Page:**	(Page 6 of 8)
		Date Prepared:	2025-05-05T12:36:39-04:00

K. TAILORED METHOD GENERAL LIGHTING POWER ALLOWANCE

This section does not apply to this project.

L. ADDITIONAL LIGHTING ALLOWANCE: TAILORED WALL DISPLAY

This section does not apply to this project.

M. ADDITIONAL LIGHTING ALLOWANCE: TAILORED FLOOR AND TASK LIGHTING

This section does not apply to this project.

N. ADDITIONAL LIGHTING ALLOWANCE: TAILORED DECORATIVE /SPECIAL EFFECTS

This section does not apply to this project.

O. ADDITIONAL LIGHTING ALLOWANCE: TAILORED VERY VALUABLE MERCHANDISE

This section does not apply to this project.

P. POWER ADJUSTMENT: LIGHTING CONTROL CREDIT (POWER ADJUSTMENT FACTOR (PAF))

This section does not apply to this project.

Q. RATED POWER REDUCTION COMPLIANCE FOR ONE-FOR-ONE ALTERATIONS

This section does not apply to this project.

R. 80% LIGHTING POWER FOR ALL ALTERATIONS - CONTROLS EXCEPTIONS

This section does not apply to this project.

STATE OF CALIFORNIA
Indoor Lighting
CALIFORNIA ENERGY COMMISSION

CERTIFICATE OF COMPLIANCE			NRCC-LTI-E
Project Name:	C258 Newhall Park	**Report Page:**	(Page 7 of 8)
		Date Prepared:	2025-05-05T12:36:39-04:00

S. DAYLIGHT DESIGN POWER ADJUSTMENT FACTOR (PAF)

This section does not apply to this project.

T. DWELLING UNIT LIGHTING

This section does not apply to this project.

U. DECLARATION OF REQUIRED CERTIFICATES OF INSTALLATION

Selections have been made based on information provided in this document. If any selections have been changed by permit applicant, an explanation should be included in Table E. Additional Remarks. These documents must be provided to the building inspector during construction and can be found online

Form/Title
NRCI-LTI-E - Must be submitted for all buildings

V. DECLARATION OF REQUIRED CERTIFICATES OF ACCEPTANCE

Selections have been made based on information provided in this document. If any selections have been changed by the permit applicant, an explanation should be included in Table E. Additional Remarks. These documents must be provided to the building inspector during construction and any with "-A" in the form name must be completed through an Acceptance Test Technician Certification Provider (ATTCP). For more information visit: http://www.energy.ca.gov/title24/attcp/providers.html

Form/Title	Systems/Spaces To Be Field Verified
NRCA-LTI-02-A - Must be submitted for occupancy sensors and automatic time switch controls.	Acid Storage Room; Chlorine Storage Room; Calcium Hypochlorite & Bicarb Storage Room; Dry Acid & Soda Ash Storage Room; Emergency Eyewash/Shower Room; Storage Room

STATE OF CALIFORNIA
Indoor Lighting
CALIFORNIA ENERGY COMMISSION

CERTIFICATE OF COMPLIANCE			NRCC-LTI-E
Project Name:	C258 Newhall Park	**Report Page:**	(Page 8 of 8)
Project Address:	24923 Newhall Ave, Santa Clarita, CA 91321	**Date Prepared:**	2025-05-05T12:36:39-04:00

DOCUMENTATION AUTHOR'S DECLARATION STATEMENT

I certify that this Certificate of Compliance documentation is accurate and complete.

Documentation Author Name: Neil Chin	Documentation Author Signature: Neil Chin
Company: PACE Water	Signature Date: 5/5/2025
Address: 17520 Newhope St #200	CEA/ HERS Certification Identification (if applicable):
City/State/Zip: Fountain Valley, CA 92708	Phone: 714-481-7300

RESPONSIBLE PERSON'S DECLARATION STATEMENT

I certify the following under penalty of perjury, under the laws of the State of California:

1. The information provided on this Certificate of Compliance is true and correct.
2. I am eligible under Division 3 of the Business and Professions Code to accept responsibility for the building design or system design identified on this Certificate of Compliance (responsible designer)
3. The energy features and performance specifications, materials, components, and manufactured devices for the building design or system design identified on this Certificate of Compliance conform to the requirements of Title 24, Part 1 and Part 6 of the California Code of Regulations.
4. The building design features or system design features identified on this Certificate of Compliance are consistent with the information provided on other applicable compliance documents, worksheets, calculations, plans and specifications submitted to the enforcement agency for approval with this building permit application.
5. I will ensure that a completed signed copy of this Certificate of Compliance shall be made available with the building permit(s) issued for the building, and made available to the enforcement agency for all applicable inspections. I understand that a completed signed copy of this Certificate of Compliance is required to be included with the documentation the builder provides to the building owner at occupancy.

Responsible Designer Name: Bashar Ishaq	Responsible Designer Signature: B Ishaq
Company: PACE Water	Date Signed: 5/5/2025
Address: 17520 Newhope St #200	License: E24590
City/State/Zip: Fountain Valley, CA 92708	Phone: 714-481-7300

CITY OF SANTA CLARITA BUILDING & SAFETY
APPROVED
Under SCMC Titles 18, 19, 20, 21, 24, 25
Sep 16, 2025
F. Svendsen
BLD25-00576 (ARCH)
The approved plans must be available at the construction site at all times. Changes or alterations to approved plans shall not be made without written permission from the City of Santa Clarita Building & Safety Division. The approval of these plans shall not be construed to permit or approve any violation of the applicable codes, ordinances, or other laws.

PACE Advanced Water Engineering
17520 Newhope Street, Suite 200 | Fountain Valley, CA 92708
P: (714) 481-7300 | www.pacewater.com

REVIEWED BY: PM - DESIGN 09/30/2025 EXECUTION DATE
REVIEWED BY: PM - CONSTRUCTION 09/30/2025 EXECUTION DATE

IN ACCORDANCE WITH RESOLUTION No. 19-6, AS A RESOLUTION OF THE CITY COUNCIL OF THE CITY OF SANTA CLARITA DELEGATING DISCRETIONARY AUTHORITY TO THE DIRECTOR OF PUBLIC WORKS, DIRECTOR OF RECREATION AND COMMUNITY SERVICES, DIRECTOR OF NEIGHBORHOOD SERVICES, CITY ENGINEER, AND ASSISTANT CITY ENGINEERS TO APPROVE PLANS AND DESIGNS FOR THE CONSTRUCTION OF OR IMPROVEMENTS TO PUBLIC PROPERTY FOR PURPOSES OF DESIGN IMMUNITY PURSUANT TO GOVERNMENT CODE SECTION 830.6 FOR THE CITY OF SANTA CLARITA, I DO HEREBY EXERCISE THE DISCRETION DELEGATED TO ME AND APPROVE THE PLAN OR DESIGN, OR AMENDMENT OR MODIFICATION TO THE PLAN OR DESIGN, OR A CONSTRUCTION OF, OR AN IMPROVEMENT TO THE PUBLIC FACILITY, STRUCTURE, OR PROPERTY TO WHICH THIS STATEMENT, MY SIGNATURE AND DATE IS AFFIXED.

LICENSED PROFESSIONAL ENGINEER BASHAR MATE ISHAQ E24590 EXP. 06/30/27 ELECTRICAL STATE OF CALIFORNIA

PREPARED BY ZIRANG SONG
PROJECT ENGINEER R.C.E. NO. # 69315 EXP. 06/30/2026
SCALE AS SHOWN
DATE 03/2025
DRAWN J.P
DESIGNED J.P
CHECKED Z.S

TITLE: TITLE 24 INDOOR LIGHTING FORM II

C258
NEWHALL PARK POOL
PUMP ROOM RENOVATION PLANS (100% CD)
SANTA CLARITA CA

SHEET E8.1
57 OF 60 SHEETS
JOB NO. C258

Docusign Envelope ID: F28B5F90-223C-42A7-9ED1-46869B54D361
Xrefs: C258 Titleblock_ELEC.dwg
Dimscale = 1; LTscale = 1; PSltscale = 1; ACAD Ver. = 23.0s (LMS Tech); Visretain = 1
R:\C258\Engineering\C258-04 (100% CD)\sheets\C258-04 E8.0.dwg - Tab: 55 - by jpenderghast on 09/29/25 at 3:54:33 PM

STATE OF CALIFORNIA
Outdoor Lighting
CALIFORNIA ENERGY COMMISSION

CERTIFICATE OF COMPLIANCE		NRCC-LTO-E
This document is used to demonstrate compliance with requirements in 110.9, 130.0, 130.2, 140.7, and 141.0(b)2L for outdoor lighting scopes using the prescriptive path for nonresidential and hotel/motel occupancies. It is also used to document compliance with requirements in 160.5, 170.2(e)6, 180.1(a) and 180.2(b)4Bv for outdoor lighting scopes using the prescriptive path for multifamily and mixed-use occupancies. Multifamily includes dormitory and senior living facilities.		
Project Name: C258 Newhall Park	**Report Page:**	**(Page 1 of 7)**
Project Address: 24923 Newhall Ave, Santa Clarita, CA 91321	**Date Prepared:**	2025-03-12T17:36:46-04:00

A. GENERAL INFORMATION

01	Project Location (city)	Santa Clarita, CA	04	Total Illuminated Hardscape Area (ft²)	13019
02	Climate Zone	9			

03 Outdoor Lighting Zone per Title 24 Part 1 10.114 or as designated by Authority Having Jurisdiction (AHJ):

☐ LZ-0: Very Low - Undeveloped Parkland ☐ LZ-2: Moderate - Urban Clusters ☐ LZ-4: High - Must be reviewed by CA Energy Commission for Approval
☐ LZ-1: Low - Rural Areas ☒ LZ-3: Moderately High - Urban Areas

05 Occupancy Types within Project

● Commercial Industrial

B. PROJECT SCOPE

This table includes outdoor lighting systems that are within the scope of the permit application and are demonstrating compliance using the prescriptive path outlined in 140.7 / 170.2(e)6 or 141.0(b)2L / 180.2(b)4Bv for alterations.

My Project Consists of:

01	02	
☒ New Lighting System	Must Comply with Allowances from 140.7 / 170.2(e)6	
☐ Altered Lighting System	Is your alteration increasing the connected lighting load (Watts)? ○ Yes ○ No	
03	04	05
% of Existing Luminaires Being Altered[1]	Sum Total of Luminaires Being Added or Altered	Calculation Method
☐ < 10% ☐ >= 10% and < 50% ☐ >= 50%		

Please proceed to Table F. Outdoor Lighting Fixture Schedule to define the project's luminaires.

[1] FOOTNOTES: % of Existing Luminaires Being Altered = (Sum Total of Luminaires Being Added or Altered / Existing Luminaires within the Scope of the Permit Application) x 100.

C. COMPLIANCE RESULTS

Results in this table are automatically calculated from data input and calculations in Tables F through N. Note: If any cell on this table says "COMPLIES with Exceptional Conditions" refer to Table D. Exceptional Conditions for guidance or see applicable Table referenced below.

Calculations of Total Allowed Lighting Power (Watts) 140.7 / 170.2(e)6 or 141.0(b)2L / 180.2(b)4Bv											Compliance Results			
01		02		03		04		05		06		07		08	09
General Hardscape Allowance 140.7(d)1 / 170.2(e)6 (See Table I)	+	Per Application 140.7(d)2 / 170.2(e)6 (See Table J)	+	Sales Frontage 140.7(d)2 (See Table K)	+	Ornamental 140.7(d)2 / 170.2(e)6 (See Table L)	+	Per Specific Area 140.7(d)2 / 170.2(e)6 (See Table M)	OR	Existing Power Allowance 141.0(b)2L / 180.2(b)4Bv (See Table N)	=	**Total Allowed** (Watts)	≥	**Total Actual** (Watts)	**07 must be >= 08**
554.6	+	---	+	---	+	---	+	---	OR	---	=	554.6	≥	0	COMPLIES
Shielding Compliance (See Table G for Details)															COMPLIES
Controls Compliance (See Table H for Details)															COMPLIES

D. EXCEPTIONAL CONDITIONS

This table is auto-filled with uneditable comments because of selections made or data entered in tables throughout the form.

E. ADDITIONAL REMARKS

This table includes remarks made by the permit applicant to the Authority Having Jurisdiction.

F. OUTDOOR LIGHTING FIXTURE SCHEDULE

For new or altered lighting systems demonstrating compliance with 140.7 / 170.2(e)6 all new luminaires being installed and any existing luminaires remaining or being moved within the spaces covered by the permit application are included in the Table below. For altered lighting systems using the Existing Power method per 141.0(b)2L only new luminaires being installed and replacement luminaires being installed as part of the project scope are included (ie, existing luminaires remaining or existing luminaires being moved are not included). Outdoor lighting attached to multifamily buildings and controlled from the inside of a dwelling unit are included in Table H. and are not included here. All other multifamily outdoor lighting is included here.

Designed Wattage:

01	02		03	04	05	06	07	08	09	10	
Name or Item Tag	Complete Luminaire Description		Watts per luminaire[1, 2]	How is Wattage determined	Total Number Luminaires[2]	Luminaire Status[3]	Excluded per 140.7(a) / 170.2(e)6A	Design Watts	Cutoff Req. > 6,200 initial lumen output 130.2(b) / 160.5(c)[4]	Field Inspector	
										Pass	Fail
Outdoor LED Wallpack	Outdoor LED Wallpack, 120V, 57W	☐ Linear	57	Mfr. Spec	9	New	☒	---	NA: < 6200 lumens	☐	☐
RAB Shark 8 FT	RAB Shark Linear Washdown 8 FT, 120V, 70W	☐ Linear	70	Mfr. Spec	2	New	☒	---	Provided	☐	☐
Flood Light	Pool Deck Flood Light, Pole-Mtd, 120V, 70W	☐ Linear	70	Mfr. Spec	8	New	☒	---	Provided	☐	☐
Pool Light	Pool Niche Light, 120V, 28W	☐ Linear	28	Mfr. Spec	5	New	☒	---	NA: < 6200 lumens	☐	☐
								Total Design Watts:	0		

* NOTES: Selections with a * require a note in the space below explaining how compliance is achieved.
EX: Luminaire is lighting a statue; EXCEPTION 2 to 130.2(b)

[1] FOOTNOTES: Authority Having Jurisdiction may ask for Luminaire cut sheets to confirm wattage used for compliance per 130.0(c) / 160.5(b)
[2] For linear luminaires, wattage should be indicated as W/lf instead of Watts/luminaire. Total linear feet should be indicated in column 05 instead of number of luminaires.
[3] Select "New" for new luminaires in a new outdoor lighting project, or for added luminaires in an alteration. Select "Altered" for replacement luminaires in an alteration. Select "Existing to Remain" for existing luminaires within the project scope that are not being altered and are remaining. Select "Existing Reinstalled" for existing luminaires which are being removed and reinstalled as part of the project scope.
[4] Compliance with mandatory shielding requirements is required for luminaires with initial lumen output >= 6,200 unless exempted by 130.2(b)/ 160.5(c)

G. SHIELDING REQUIREMENTS (BUG)

This section does not apply to this project.

H. OUTDOOR LIGHTING CONTROLS

This table demonstrates compliance with controls requirements for all new or altered luminaires installed as part of the permit application. For alteration projects, luminaires which are existing to remain (ie untouched) and luminaires which are removed and reinstalled (wiring only) do not need to be included in this table even if they are within the spaces covered by the permit application.
Outdoor lighting for nonresidential buildings, parking garages and common service areas in multifamily buildings must be documented separately from outdoor lighting attached to multifamily buildings and controlled from the inside of a dwelling unit

Mandatory Controls for Nonresidential Occupancies, Parking Garages & Common Areas in Multifamily Buildings

01	02	03	04	05	
Area Description	Shut-Off 130.2(c)1 / 160.5(c)	Auto-Schedule 130.2(c)2 / 160.5(c)	Motion Sensor 130.2(c)3 / 160.5(c)	Field Inspector	
				Pass	Fail
Building/Pool Deck Area: "Outdoor LED Wallpack"	Photocontrol	Provided	NA: Athletic Fields/Playgrounds Lighting	☐	☐
Building/Pool Deck Area: "RAB Shark 8 FT"	Photocontrol	Provided	NA: Athletic Fields/Playgrounds Lighting	☐	☐
Building/Pool Deck Area: "Flood Light"	Photocontrol	Provided	NA: Athletic Fields/Playgrounds Lighting	☐	☐
Building/Pool Deck Area: "Pool Light"	Photocontrol	Provided	NA: Athletic Fields/Playgrounds Lighting	☐	☐

[1] FOOTNOTE: Text has been abbreviated, please refer to Table 160.5-A to confirm compliance with the specific light source technologies listed.
[2] Authority having jurisdiction may ask for cutsheets or other documentation to confirm compliance of light source.
[3] Recessed luminaires marked for use in fire-rated installations, and recessed luminaires installed in non-insulated ceilings are excepted from ii and iii.

CITY OF SANTA CLARITA
BUILDING & SAFETY
APPROVED
Under SCMC Titles 18, 19, 20, 21, 24, 25
Sep 16, 2025
F. Svendsen
BLD25-00576 (ARCH)
The approved plans must be available at the construction site at all times. Changes or alterations to approved plans shall not be made without written permission from the City of Santa Clarita Building & Safety Division. The approval of these plans shall not be construed to permit or approve any violation of the applicable codes, ordinances, or other laws.

PACE
Advanced Water Engineering
17520 Newhope Street, Suite 200 | Fountain Valley, CA 92708
P: (714) 481-7300 | www.pacewater.com

REVIEWED BY: John Newhall PM/DESIGN 09/30/2025 EXECUTION DATE
REVIEWED BY: PM-CONSTRUCTION 09/30/2025 EXECUTION DATE

IN ACCORDANCE WITH RESOLUTION No. 19-6, AS A RESOLUTION OF THE CITY COUNCIL OF THE CITY OF SANTA CLARITA DELEGATING DISCRETIONARY AUTHORITY TO THE DIRECTOR OF PUBLIC WORKS, DIRECTOR OF RECREATION AND COMMUNITY SERVICES, DIRECTOR OF NEIGHBORHOOD SERVICES, CITY ENGINEER, AND CONSTANT CITY ENGINEERS TO APPROVE PLANS AND DESIGNS FOR THE CONSTRUCTION OF OR IMPROVEMENTS TO PUBLIC PROPERTY FOR PURPOSES OF DESIGN IMMUNITY PURSUANT TO GOVERNMENT CODE SECTION 830.6 FOR THE CITY OF SANTA CLARITA, I DO HEREBY EXERCISE THE DISCRETION VESTED IN ME BY THE ABOVE RESOLUTION AND APPROVE THE PLAN OR DESIGN, OR MODIFICATION TO THE PLAN OR DESIGN, OR A CONSTRUCTION OF, OR AN IMPROVEMENT TO THE PUBLIC FACILITY, STRUCTURE, OR PROPERTY TO WHICH THIS STATEMENT, MY SIGNATURE AND DATE IS AFFIXED.

LICENSED PROFESSIONAL ENGINEER
NAVIN PRAKASH ENGINEERING, INC.
NO. 24615
EXP. 6/30/27
CIVIL
STATE OF CALIFORNIA

PREPARED BY
ZIRANG SONG
PROJECT ENGINEER
R.C.E. NO. # 85315
EXP. Date: 6/30/27

TITLE
TITLE 24 OUTDOOR LIGHTING FORMS

SCALE: LIGHTING
DRAWN: J.P
DESIGNED: J.P
CHECKED: Z.S
DATE: 03/2025

TITLE

C258
NEWHALL PARK POOL
PUMP ROOM RENOVATION
PLANS (100% CD)
SANTA CLARITA CA

SHEET
E8.2
58 OF 60 SHEETS

JOB NO. C258

Sep. 29, 2025
Docusign Envelope ID: F28B5F90-220C-42A7-9ED1-4B9B9B540381
Xrefs: C258 Titleblock_ELEC.dwg
Dimscale = 1, LTscale = 1, PSltscale = 1, ACAD Ver. = 23.0s (LMS Tech), Viewtem = 1
R:\C258\Engineering\C258-04 (100% CD)\sheets\C258-04 E8.0.dwg - Tab: 57 - by jpenderghast on 09/29/25 at 3:54:33 PM

STATE OF CALIFORNIA

Outdoor Lighting

CALIFORNIA ENERGY COMMISSION

CERTIFICATE OF COMPLIANCE		NRCC-LTO-E
Project Name: C258 Newhall Park	**Report Page:**	**(Page 5 of 7)**
	Date Prepared:	2025-03-12T17:36:46-04:00

I. LIGHTING POWER ALLOWANCE (per 140.7 / 170.2(e))

This table includes areas using allowance calculations per 140.7 / 170.2(e). General Hardscape Allowance is per Table 140.7-A/Table 170.2-R while "Use it or lose it" Allowances are per Table 140.7-B /Table 170.2-S. Indicate which allowances are being used to expand sections for user input. Luminaires that qualify for one of the "Use it or lose it" allowances shall not qualify for another "Use it or lose it" allowance.
Outdoor lighting attached to multifamily buildings and controlled from the inside of a dwelling unit are included in Table H. and are not included here. All other multifamily outdoor lighting is included here.

01				
	"Use it or lose it" Allowance (select all that apply) (select all that apply)			
☒ General Hardscape Allowance Table I (below)	☐ Per Application Table J	☐ Sales Frontage Table K	☐ Ornamental Table L	☐ Per Specific Area Table M

Calculated General Hardscape Lighting Power Allowance per Table 140.7-A for Nonresidential & Hotel/Motel

02	03	04	05	06	07	08	09
Area Description	Area Wattage Allowance (AWA)			Linear Wattage Allowance (LWA)			Total General AWA + LWA (Watts)
	Illuminated Area (ft^2)	Allowed Density (W/ft^2)	Area Allowance (Watts)	Perimeter Length (lf)	Allowed Density (W/lf)	Linear Allowance (Watts)	
Building/Pool Deck Area	13019	0.021	273.4	156	0.2	31.2	304.6
						Initial Wattage Allowance for Entire Site (Watts):	250
						Instances of Initial Wattage Allowance (LZ 0 only)[1]	
						Total General Hardscape Allowance (Watts):	554.6

J. LIGHTING ALLOWANCE: PER APPLICATION

This section does not apply to this project.

K. LIGHTING ALLOWANCE: SALES FRONTAGE

This section does not apply to this project.

L. LIGHTING ALLOWANCE: ORNAMENTAL

This section does not apply to this project.

Generated Date/Time:

Documentation Software: Energy Code Ace

CA Building Energy Efficiency Standards - 2022 Nonresidential Compliance

Report Version: 2022.0.000
Schema Version: rev 20220101

Compliance ID: 223835-0325-0007
Report Generated: 2025-03-12 14:36:49

STATE OF CALIFORNIA

Outdoor Lighting

CALIFORNIA ENERGY COMMISSION

CERTIFICATE OF COMPLIANCE		NRCC-LTO-E
Project Name: C258 Newhall Park	**Report Page:**	**(Page 6 of 7)**
	Date Prepared:	2025-03-12T17:36:46-04:00

M. LIGHTING ALLOWANCE: PER SPECIFIC AREA

This section does not apply to this project.

N. EXISTING CONDITIONS POWER ALLOWANCE (alterations only)

This section does not apply to this project.

O. DECLARATION OF REQUIRED CERTIFICATES OF INSTALLATION

Selections have been made based on information provided in this document. If any selection has been changed by permit applicant, an explanation should be included in Table E. Additional Remarks. These documents must be provided to the building inspector during construction and can be found online

Form/Title
NRCI-LTO-E - Must be submitted for all buildings

P. DECLARATION OF REQUIRED CERTIFICATES OF ACCEPTANCE

Selections have been made based on information provided in this document. If any selection has been changed by permit applicant, an explanation should be included in Table E. Additional Remarks. These documents must be provided to the building inspector during construction and must be completed through an Acceptance Test Technician Certification Provider (ATTCP). For more information visit: http://www.energy.ca.gov/title24/attcp/providers.html

Form/Title	Systems/Spaces To Be Field Verified
NRCA-LTO-02-A - Must be submitted for all outdoor lighting controls except for alterations where controls are added to <= 20 luminaires.	Building/Pool Deck Area: "Outdoor LED Wallpack"; Building/Pool Deck Area: "RAB Shark 8 FT"; Building/Pool Deck Area: "Flood Light"; Building/Pool Deck Area: "Pool Light"

Generated Date/Time:

Documentation Software: Energy Code Ace

CA Building Energy Efficiency Standards - 2022 Nonresidential Compliance

Report Version: 2022.0.000
Schema Version: rev 20220101

Compliance ID: 223835-0325-0007
Report Generated: 2025-03-12 14:36:49

STATE OF CALIFORNIA

Outdoor Lighting

CALIFORNIA ENERGY COMMISSION

CERTIFICATE OF COMPLIANCE		NRCC-LTO-E
Project Name: C258 Newhall Park	**Report Page:**	**(Page 7 of 7)**
Project Address: 24923 Newhall Ave, Santa Clarita, CA 91321	**Date Prepared:**	2025-03-12T17:36:46-04:00

DOCUMENTATION AUTHOR'S DECLARATION STATEMENT

I certify that this Certificate of Compliance documentation is accurate and complete.

Documentation Author Name: Neil Chin	Documentation Author Signature: Neil Chin
Company: PACE Water	Signature Date: 3/12/25
Address: 17520 Newhope St #200	CEA/ HERS Certification Identification (if applicable):
City/State/Zip: Fountain Valley, CA 92708	Phone: 714-481-7300

RESPONSIBLE PERSON'S DECLARATION STATEMENT

I certify the following under penalty of perjury, under the laws of the State of California:

1. The information provided on this Certificate of Compliance is true and correct.
2. I am eligible under Division 3 of the Business and Professions Code to accept responsibility for the building design or system design identified on this Certificate of Compliance (responsible designer)
3. The energy features and performance specifications, materials, components, and manufactured devices for the building design or system design identified on this Certificate of Compliance conform to the requirements of Title 24, Part 1 and Part 6 of the California Code of Regulations.
4. The building design features or system design features identified on this Certificate of Compliance are consistent with the information provided on other applicable compliance documents, worksheets, calculations, plans and specifications submitted to the enforcement agency for approval with this building permit application.
5. I will ensure that a completed signed copy of this Certificate of Compliance shall be made available with the building permit(s) issued for the building, and made available to the enforcement agency for all applicable inspections. I understand that a completed signed copy of this Certificate of Compliance is required to be included with the documentation the builder provides to the building owner at occupancy.

Responsible Designer Name: Bashar Ishaq	Responsible Designer Signature: B Ishaq
Company: PACE Water	Date Signed: 3/12/25
Address: 17520 Newhope St #200	License: E24590
City/State/Zip: Fountain Valley, CA 92708	Phone: 714-481-7300

Generated Date/Time:

Documentation Software: Energy Code Ace

CA Building Energy Efficiency Standards - 2022 Nonresidential Compliance

Report Version: 2022.0.000
Schema Version: rev 20220101

Compliance ID: 223835-0325-0007
Report Generated: 2025-03-12 14:36:49

CITY OF SANTA CLARITA
BUILDING & SAFETY
APPROVED
Under SCMC Titles 18, 19, 20, 21, 24, 25
Sep 16, 2025
F. Svendsen
BLD25-00576 (ARCH)
The approved plans must be available at the construction site at all times. Changes or alterations to approved plans shall not be made without written permission from the City of Santa Clarita Building & Safety Division. The approval of these plans shall not be construed to permit or approve any violation of the applicable codes, ordinances, or other laws.

PACE
Advanced Water Engineering
17520 Newhope Street, Suite 200 | Fountain Valley, CA 92708
P: (714) 481-7300 | www.pacewater.com

REVIEWED BY:	
Luis Trejo	09/30/2025
PM - DESIGN	EXECUTION DATE
REVIEWED BY:	
Victor Hernandez	09/30/2025
PM - CONSTRUCTION	EXECUTION DATE

IN ACCORDANCE WITH RESOLUTION No. 19-6, AS A RESOLUTION OF THE CITY COUNCIL OF THE CITY OF SANTA CLARITA DELEGATING DISCRETIONARY AUTHORITY TO THE DIRECTOR OF PUBLIC WORKS, DIRECTOR OF RECREATION AND COMMUNITY SERVICES, DIRECTOR OF NEIGHBORHOOD SERVICES, CITY ENGINEER, AND ASSISTANT CITY ENGINEERS TO APPROVE PLANS AND DESIGNS FOR THE CONSTRUCTION OF OR IMPROVEMENTS TO PUBLIC PROPERTY FOR PURPOSES OF DESIGN IMMUNITY PURSUANT TO GOVERNMENT CODE SECTION 830.6 FOR SUCH WORK AS THEY MAY BE DULY AUTHORIZED TO EXERCISE CONSTRUCTION ELEMENTS AS APPLY TO THE PLAN OR DESIGN OF A CONSTRUCTION, OR AN IMPROVEMENT MODIFICATION TO THE PLAN OR DESIGN, OR A CONSTRUCTION OF, OR AN IMPROVEMENT TO THE PUBLIC FACILITY, STRUCTURE, OR PROPERTY TO WHICH THIS STATEMENT, MY SIGNATURE AND DATE IS AFFIXED.

LICENSED PROFESSIONAL ENGINEER
NAME: NEIL CHIN
EXP. DATE: 06/30/2026
CIVIL
STATE OF CALIFORNIA

PREPARED BY
ZIRANG SONG
PROJECT ENGINEER
R.C.E. NO. # 65315
EXP. DATE

TITLE 24 OUTDOOR LIGHTING FORM

DRAWN	SCALE	DATE
J.P		03/2025
DESIGNED		
J.P		
CHECKED		
Z.S		

TITLE

C258

NEWHALL PARK POOL
PUMP ROOM RENOVATION
PLANS (100% CD)
SANTA CLARITA CA

SHEET
E8.3
59 OF 60 SHEETS

JOB NO. C258

R:\C258\Engineering\C258-04 (100% CD)\Sheets\C258-04 E8.0.dwg - Tab: 59 - by gerardorgtest on 09/29/25 at 3:54:33 PM

Sep. 29, 2025
Docusign Envelope ID: F28B5F90-223C-42A7-8ED1-4686B6B540361
Xrefs: C258 Titleblock_ELEC.dwg
Dimscale = 1; LTscale = 1; PSltscale = 1; ACAD Ver. = 23.0s (LMS Tech); Visretain = 1

Sep. 29, 2025

STATE OF CALIFORNIA

Electrical Power Distribution

CALIFORNIA ENERGY COMMISSION

CERTIFICATE OF COMPLIANCE — **NRCC-ELC-E**

This document is used to demonstrate compliance with mandatory requirements in 130.5, for electrical systems in newly constructed nonresidential and hotel/motel occupancies and 160.6 and 160.9 for electrical systems in newly constructed multifamily occupancies. Additions and alterations to electrical service systems in nonresidential and hotel/motel occupancies will also use this document to demonstrate compliance per 141.0(a) or 141.0(b)2P for alterations. For multifamily addition or alterations compliance will be documented per 180.1(a) or 180.2 (b)4Bvii

Project Name:	C258 Newhall Park	**Report Page:**	**(Page 1 of 4)**
Project Address:	24923 Newhall Ave, Santa Clarita, CA 91321	**Date Prepared:**	2024-10-30T14:08:38-04:00

A. GENERAL INFORMATION

01	Project Location (city)	Santa Clarita, CA	02	Climate Zone	9
			03	Occupancy Types Within Project:	Commercial Industrial

B. PROJECT SCOPE

This table includes electrical systems that are within the scope of the permit application.

01	02	03	04	05	06	07
Electrical Service Designation/ Description	Scope of Work[1]	Rating[2] (kVA)	Utility Provided Metering System Exception to 130.5(a)/ 160.6(a)[3]	System subject to CA Elec Code Article 517 Exception to 130.5(a)and (b)	Demand Response Controls	Provides power to dwelling units/common living areas only in multifamily occupancy
Aquatic Center	Add/Alt to feeders and branch circuits only	---	☐	☐	Where required, demand response controls must be specified which are capable of receiving and automatically responding to at least one standards based messaging protocol which enables demand response after receiving a demand response signal. Sections 120.2/ 160.3, 130.1/ 160.5, and 130.3/ 160.5, and mechanical, indoor lighting, and sign lighting Certificate of Compliance documents will indicate when demand response controls are required.	☐

[1]FOOTNOTES: Adding only new feeders and branch circuits triggers Voltage Drop 130.5(c)/160.6(c), no other requirements from 130.5/160.6 are required.
[2] If common use areas in a multifamily are submetered, rating is for submeter size serving common use areas.
[3] Applicable if the utility company is providing a metering system that indicates instantaneous kW demand and kWh for a utility-defined period.

STATE OF CALIFORNIA

Electrical Power Distribution

CALIFORNIA ENERGY COMMISSION

CERTIFICATE OF COMPLIANCE — **NRCC-ELC-E**

Project Name:	C258 Newhall Park	**Report Page:**	**(Page 2 of 4)**
		Date Prepared:	2024-10-30T14:08:38-04:00

C. COMPLIANCE RESULTS

Results in this table are automatically calculated from data input and calculations in Tables F through J. Note: If any cell on this table says "COMPLIES with Exceptional Conditions" refer to Table D. Exceptional Conditions for guidance or see applicable Table referenced below.

01		02		03		04	05	06
Service Electrical Metering 130.5(a)/ 160.6(a) (See Table F)	AND	Separation for Monitoring 130.5(b)/ 160.6(b) (See Table G)	AND	Voltage Drop 130.5(c)/ 160.6(c) (See Table H)	AND	Controlled Receptacles 130.5(d)/ 160.6(d) (See Table I)	Electric Ready 160.9 (See Table J)	**Compliance Results**
	AND		AND	Yes	AND			COMPLIES

D. EXCEPTIONAL CONDITIONS

This table is auto-filled with uneditable comments because of selections made or data entered in tables throughout the form.

E. ADDITIONAL REMARKS

This table includes remarks made by the permit applicant to the Authority Having Jurisdiction.

H. VOLTAGE DROP

This table includes entirely new or complete replacement electrical power distribution systems, or alterations that add, modify or replace both feeders and branch circuits to demonstrate compliance with 130.5(c)/ 160.6(c). For alterations, only the altered circuits must demonstrate compliance per 141.0(b)2Piii/ 180.2(b)4Bviic.

01	02				03	04	05	
Electrical Service Designation/Description	Combined Voltage Drop on Installed Feeder/Branch Circuit Conductors Compliance Method				Location of Voltage Drop Calculations[1]	Sheet Number for Voltage Drop Calculations in Construction Documents	Field Inspector	
							Pass	Fail
Aquatic Center	☒	Voltage drop less than 5%	☐	Permitted by CA Elec Code (Exception to 130.5(c))*	Contractor Responsible		☐	☐

** NOTES: If "Permitted by CA Elec Code *" is selected under Compliance Method above, please indicate where the exception applies in the space provided below.*

[1] FOOTNOTES: Voltage drop calculations may be attached to the permit application outside the construction documents if allowed by the Authority Having Jurisdiction. Select "attached" if applicable. If calculations will be the responsibility of the installing contractor, select "Contractor Responsible".

STATE OF CALIFORNIA

Electrical Power Distribution

CALIFORNIA ENERGY COMMISSION

CERTIFICATE OF COMPLIANCE — **NRCC-ELC-E**

Project Name:	C258 Newhall Park	**Report Page:**	**(Page 3 of 4)**
		Date Prepared:	2024-10-30T14:08:38-04:00

K. DECLARATION OF REQUIRED CERTIFICATES OF INSTALLATION

Selections have been made based on information provided in this document. If any selection have been changed by permit applicant, an explanation should be included in Table E. Additional Remarks. These documents must be provided to the building inspector during construction and can be found online

Form/Title
NRCI-ELC-E - Must be submitted for all buildings

L. DECLARATION OF REQUIRED CERTIFICATES OF ACCEPTANCE

There are no NRCA forms required for this project.

STATE OF CALIFORNIA

Electrical Power Distribution

CALIFORNIA ENERGY COMMISSION

CERTIFICATE OF COMPLIANCE — **NRCC-ELC-E**

Project Name:	C258 Newhall Park	**Report Page:**	**(Page 4 of 4)**
Project Address:	24923 Newhall Ave, Santa Clarita, CA 91321	**Date Prepared:**	2024-10-30T14:08:38-04:00

DOCUMENTATION AUTHOR'S DECLARATION STATEMENT

I certify that this Certificate of Compliance documentation is accurate and complete.

Documentation Author Name:	Neil Chin	Documentation Author Signature:	Neil Chin
Company:	PACE Water	Signature Date:	10/30/2024
Address:	17520 Newhope St #200	CEA/ HERS Certification Identification (if applicable):	
City/State/Zip:	Fountain Valley, CA 92708	Phone:	714-481-7300

RESPONSIBLE PERSON'S DECLARATION STATEMENT

I certify the following under penalty of perjury, under the laws of the State of California:

1. The information provided on this Certificate of Compliance is true and correct.
2. I am eligible under Division 3 of the Business and Professions Code to accept responsibility for the building design or system design identified on this Certificate of Compliance (responsible designer)
3. The energy features and performance specifications, materials, components, and manufactured devices for the building design or system design identified on this Certificate of Compliance conform to the requirements of Title 24, Part 1 and Part 6 of the California Code of Regulations.
4. The building design features or system design features identified on this Certificate of Compliance are consistent with the information provided on other applicable compliance documents, worksheets, calculations, plans and specifications submitted to the enforcement agency for approval with this building permit application.
5. I will ensure that a completed signed copy of this Certificate of Compliance shall be made available with the building permit(s) issued for the building, and made available to the enforcement agency for all applicable inspections. I understand that a completed signed copy of this Certificate of Compliance is required to be included with the documentation the builder provides to the building owner at occupancy.

Responsible Designer Name:	Bashar Ishaq	Responsible Designer Signature:	B. Ishaq
Company:	PACE Water	Date Signed:	10/30/2024
Address:	17520 Newhope St #200	License:	E24590
City/State/Zip:	Fountain Valley, CA 92708	Phone:	714-481-7300

CITY OF SANTA CLARITA BUILDING & SAFETY
APPROVED
Under SCMC Titles 18, 19, 20, 21, 24, 25
Sep 16, 2025
F. Svendsen
BLD25-00576 (ARCH)
The approved plans must be available at the construction site at all times. Changes or alterations to approved plans shall not be made without written permission from the City of Santa Clarita Building & Safety Division. The approval of these plans shall not be construed to permit or approve any violation of the applicable codes, ordinances, or other laws.

PACE Advanced Water Engineering
17520 Newhope Street, Suite 200 | Fountain Valley, CA 92708
P: (714) 481-7300 | www.pacewater.com

REVIEWED BY: katie knight — PM - DESIGN — 09/30/2025 EXECUTION DATE
REVIEWED BY: — PM - CONSTRUCTION — 09/30/2025 EXECUTION DATE

IN ACCORDANCE WITH RESOLUTION No. 19-6, AS A RESOLUTION OF THE CITY COUNCIL OF THE CITY OF SANTA CLARITA DELEGATING DISCRETIONARY AUTHORITY TO THE DIRECTOR OF PUBLIC WORKS, DIRECTOR OF RECREATION AND COMMUNITY SERVICES, DIRECTOR OF NEIGHBORHOOD SERVICES, CITY ENGINEER, AND ASSISTANT CITY ENGINEERS TO APPROVE PLANS AND DESIGNS FOR THE CONSTRUCTION OF OR IMPROVEMENTS TO PUBLIC PROPERTY FOR PURPOSES OF DESIGN IMMUNITY PURSUANT TO GOVERNMENT CODE SECTION 830.6 FOR THE CITY OF SANTA CLARITA, I DO HEREBY EXERCISE THE DISCRETION DELEGATED TO ME AND APPROVE THE PLAN OR DESIGN, OR AMENDMENT OR MODIFICATION TO THE PLAN OR DESIGN, OR A CONSTRUCTION OF, OR AN IMPROVEMENT TO THE PUBLIC FACILITY, STRUCTURE, OR PROPERTY TO WHICH THIS STATEMENT, MY SIGNATURE AND DATE IS AFFIXED.

LICENSED PROFESSIONAL ENGINEER — BASHAR MATE ISHAQ — E 24590 — EXP. 06/30/27 — ELECTRICAL — STATE OF CALIFORNIA

PREPARED BY ZIRANG SONG
PROJECT ENGINEER
R.C.E. NO. — # 69315
EXP. 06/30/2026
SCALE
DATE 03/2025
DRAWN J.P
DESIGNED J.P
CHECKED Z.S

TITLE
TITLE 24 POWER DISTRIBUTION FORM

C258
NEWHALL PARK POOL
PUMP ROOM RENOVATION PLANS (100% CD)
SANTA CLARITA CA

SHEET **E8.4**
61 OF 60 SHEETS
JOB NO. C258

Docusign Envelope ID: F28B5F90-223C-42A7-9ED1-46869B54D361
Xrefs: C258 Titleblock_ELEC.dwg
Dimscale = 1; LTscale = 1; PSltscale = 1; ACAD Ver. = 23.0s (LMS Tech); Visretain = 1
R:\C258\Engineering\C258-04 (100% CD)\sheets\C258-04 E8.0.dwg - Tab: 61 - by jpenderghast on 09/29/25 at 3:54:33 PM

100% Engineering Specifications

Newhall Pool Park
Pump Station Renovation

October 2025

Prepared For:

City of Santa Clarita
23920 Valencia Boulevard,
Santa Clarita, Ca 91355

Prepared By:

Pacific Advanced Civil Engineering, Inc. (PACE)
17520 Newhope Street, Suite 200
Fountain Valley, CA 92708
Phone: 714-481-7300

Contact:

Zirang Song, PE

PACE #C258-04

DIVISION 00
INTRODUCTION

SECTION 00020
CONTRACT DOCUMENTS TABLE OF CONTENTS

Section

BIDDING REQUIREMENTS, CONTRACT FORMS, AND
CONDITIONS OF THE CONTRACT

DIVISION 00 – CONDITIONS OF THE CONTRACT

00200 Table of Contents

DIVISION 01 – GENERAL REQUIREMENTS (NOT USED)

DIVISION 02 – SITEWORK

02200 Site Preparation
02400 Demolition and Structure Moving
02419 Selective Demolition

DIVISION 03 – CONCRETE

03100 Concrete Forms
03200 Concrete Reinforcement
03300 Cast-In-Place Concrete

DIVISION 04 – MASONRY

04220 Concrete Masonry Units

DIVISION 05 – METALS

05120 Structural Steel

DIVISION 06 – WOOD AND PLASTICS

06100 Rough Carpentry

DIVISION 07 – THERMAL AND MOISTURE PROTECTION

07150 Self-Adhering Sheet Waterproofing
07412 Preformed Wall Panels
07620 Sheet Metal Flashing and Trim
07720 Roof Hatches

DIVISION 08 – DOORS AND WINDOWS

08115 Metal Wall Louvers
08220 Fiberglass Doors
08330 Overhead Doors

DIVISION 09 – FINISHES (Not Used)

DIVISION 10 – SPECIALTIES (Not Used)

DIVISION 11 – EQUIPMENT

11001	Pump Room Equipment
11240	Chemical Feed Systems
11937	Vertical Turbine Pump

DIVISION 12 – FURNISHINGS (NOT USED)

DIVISION 13 – SPECIAL CONSTRUCTION (NOT USED)

DIVISION 14 – CONVEYING SYSTEMS (NOT USED)

DIVISION 15 – MECHANICAL

15000	Piping, General
15005	Piping Identification and Signage Systems
15006	Pipe Supports
15071	Plastic Pipe and Tubing
15170	Pump Room Mechanical Piping
15183	Gauges
15200	Valves, General
15203	Check Valves
15207	Ball Valves
15230	Miscellaneous Valves
15410	Plumbing and Piping Systems
15505	Pipeline Hydrostatic Testing
15506	Pool Pipe Pressure Testing

DIVISION 16 – ELECTRICAL

16000	General Electrical Requirements
16100	Basic Electrical Materials and Methods
16111	Conduits
16118	Concrete Pull Boxes
16123	Conductors and Cable (600V)
16124	Instrumentation Class Cable
16130	Outlet, Pull, and Junction Boxes
16141	Wiring Devices
16143	Terminal Blocks
16150	Induction Motors
16160	Enclosures
16170	Grounding
16190	Supporting Devices
16195	Electrical Identification
16416	Panelboards
16440	Disconnect Switches
16476	Low Voltage Circuit Breakers

DIVISION 16 – ELECTRICAL, Continued

16477	600 V Fuses
16480	Motor Controllers
16482	Adjustable Frequency Drive Equipment
16500	Lighting
16902	Electrical Controls, Relays and Alarms
16950	Electrical Testing
16951	Short Circuit and Coordination Report

DIVISION 17 – INSTRUMENTATION (NOT USED)

APPENDIX A – GEOTECHNICAL REPORT

END OF SECTION

DIVISION 01

GENERAL REQUIREMENTS

(NOT USED)

DIVISION 02
SITEWORK

SECTION 02200 – SITE PREPARATION

PART 1 – GENERAL

1.1 WORK INCLUDED

A. All finish and fine grading to bring the surface of the ground to the required grades and elevations as indicated on the Drawings.

B. Subgrade improvements and placing of compacted fills per the geotechnical recommendations included in the Project Appendices.

C. Excavation and backfill for all pump room structural requirements, including footings, grade beams, foundations, and walls.

1.2 QUALITY ASSURANCE

A. All Work of this Section shall be performed by the Pool Contractor/Subcontractor.

B. Requirements of Regulatory Agencies: Conform with the requirements of the General Conditions, and more specifically the following:
   1. Conform to the latest edition of Title 24, California Code of Regulations.
   2. Comply with State of California Construction Safety Orders, latest register (OSHA).
   3. Comply with trench safety provisions, per local code.

C. Project/Site Conditions
   1. Be familiar with site and subsurface conditions per the geotechnical recommendations.
   2. Excavation is unclassified and includes excavation to subgrade elevations indicated or necessary, regardless of character of materials and obstructions encountered.
   3. Provisions for mitigation of groundwater shall be made during excavation and throughout construction. If wet soils are encountered within the pump room excavations, de-watering shall be provided and a minimum 8" layer of well graded gravel shall be placed over the bottom of the excavation to provide a working mat during construction.
   4. Where slope instability is encountered, all excavations within those areas shall be 1:1 or flatter. Forming of vertical walls may be necessary, and all soil conditions shall be field verified by Geotechnical Engineer.
   5. The availability of records of investigations of soil or subsurface conditions and/or logs of test borings:
      a. Shall not be construed as a waiver of the CONTRACTOR's duty to examine the site of the Work contemplated, and the CONTRACTOR is cautioned to make such independent investigations and examinations as the CONTRACTOR deems necessary to satisfy the CONTRACTOR as to the subsurface conditions to be encountered in the performance of the Work.
      b. Will not relieve the CONTRACTOR from the risk of unanticipated soil or subsurface conditions or from properly fulfilling the terms of the Contract at the Contract Sum.
   6. If soil or subsurface conditions are encountered which require, in the opinion of the Engineer, design details which differ from those design details shown in the Contract Documents and the Engineer finds that such revised design details will cause an increase or decrease in the cost of, or the time required for performance of the Contract, the Engineer will, after approval by the OWNER, modify the Contract terms in writing to provide for the change in design details and to provide for an adjustment in cost and/or time of performance as permitted in the Contract Documents. A change in "design details" is defined as a change in the size or character of the Work made necessary by differing conditions, such as the requirement for a change in the depth or size of a footing or pier, or for a change in the indicated reinforcement.

7. Off-site Access: Verify all limitations imposed by public jurisdictions on off-site construction routes.
8. On-site Access: Use on-site access routes designated by the OWNER. Maintain these routes during construction. At completion of construction restore routes to original condition at no additional cost to the OWNER.
9. Unusual Site Conditions: In the event that unusual site conditions, not defined by the Contract Documents, are encountered; discontinue work in the affected area, and notify OWNER and Engineer immediately.

D. Adverse Weather Conditions
1. During the periods when site soil moisture content is substantially in excess of moisture content required for optimum compaction, do not perform fill compaction.
2. When unfavorable weather conditions necessitate interrupting filling and grading operations, prepare areas by compaction of surface and grading to avoid collection of water. Provide adequate temporary drainage to prevent erosion.

1.3 SUBMITTALS

A. Provide submittals in accordance with the requirements of Division 01.

1.4 EXCAVATING & TRENCHING, GENERAL REQUIREMENTS

A. Before beginning any excavation five feet or more in depth, CONTRACTOR shall submit to Engineer a detailed plan showing the design of shoring, bracing, sloping, or other provisions to be made for worker protection from the hazard of caving ground during excavation. The proposed plan shall comply with the standards established by the State of California Construction Safety Orders and Title 24 of the California Code of Regulations (CCR). If the detailed plan varies from such shoring system standards, it shall be prepared by a registered civil or structural engineer whose name and registration number shall be indicated on the Drawing. If a dispute arises as to whether the plan must be prepared by a registered civil or structural engineer, Engineers' determination of the matter shall be final and conclusive. The cost of required engineering services shall be borne by CONTRACTOR and shall be deemed to have been included in the guaranteed maximum price for the Work as stated in the Contract Documents.

B. The review of any plan showing design of shoring, bracing, sloping, or other provisions for worker protection, by the Engineer shall relieve the CONTRACTOR from obligation to comply with Construction Safety Order Standards and Title 24 OCR for design and construction of such protective work, and CONTRACTOR shall indemnify OWNER and Engineer from any and all claims, liability, costs, actions, and causes of action arising out of or related to the failure of such protective systems. CONTRACTOR shall defend OWNER, its officers, employees, and agents and Engineer in any litigation proceeding brought with respect to the failure of such protective systems.

C. All trenches, holes, etc. are to be completely protected using solid barricades, steel plates, and plywood both during construction and during off hours, including night time.

D. Flashing warning light barricades are required on sidewalks, roads, and any other critical areas that require night time protection.

E. Sidewalks and roads shall not be blocked at any time or in any way. Trenching across sidewalks or roads involves special instructions and review of the construction procedure by the Engineer at least 3 days prior to the Work actually being started.

F. Construction equipment, including all trucks, cars, etc. shall not be parked or driven on bike paths or sidewalks. No other items are allowed on sidewalks or roads including hoses, power cords, ropes, construction materials, dirt and debris, etc.

G. All sidewalks must remain clear and the CONTRACTOR shall maintain temporary safe and effective pedestrian access at all times.

H. Drawings show existing major underground utilities using the best information available. The CONTRACTOR and any Subcontractors shall also fully check public works reference drawings prior to excavation. Call Dig Alert to locate utilities to ensure safety.

PART 2 – PRODUCTS

2.1 MATERIALS

A. Fill Material, General: All material shall be subject to the review of the Geotechnical Engineer to determine acceptability.

B. On-site Fill Material: All on-site fill material shall be soil or soil-rock mixture which is free from organic matter and other deleterious substances; it shall contain no rocks or lumps over three (3) inches in greatest dimension and not more than 15% of the rocks or lumps shall be larger than two (2) inches in greatest dimension. Material from the pump room excavations may not be acceptable native fill material. A determination must be made before their use by the Geotechnical Engineer.

C. Imported Fill Material: All imported fill material shall meet the requirements of Paragraph 2.01(A) and 2.01(B) above and shall in addition, be predominately granular and non-expansive, with a maximum particle size of three (3) inches.

PART 3 – EXECUTION

3.1 INSPECTION

Verify drawing dimensions and elevations with actual field conditions. Inspect related Work and adjacent surfaces and report discrepancies and conditions which prevent proper execution of the Work to the OWNER and Engineer.

3.2 SUBGRADE IMPROVEMENTS

A. Clearing: Strip site area (as defined within the Drawings) of any topsoil containing vegetation, trees and roots, organic matter, and other debris, and dispose of as specified.

B. Placement of Fills: Place fill, consisting of approved soils, clean and free of all vegetation, debris, and rocks larger than three (3) inches, in uniform six (6) inch lifts. Fill to be compacted at optimum moisture to 95% maximum density with approved mechanical compaction equipment.

3.3 EXCAVATION

A. Checking Layout: CONTRACTOR shall, before commencing the excavation work, check all lines, stakes, and levels for dimensions, angles, elevations, and grades with the survey.

B. Over-Excavation: Over-Excavation and grading per plan include backfilling with aggregates, utility burial, and drainage, per Geotechnical Engineer's recommendations in the back section of the Geotechnical Report – Appendix A

C. Place fill required per Geotechnical Engineer's recommendations.

D. Dimensions: Excavate to proper dimensions as shown, cut square and smooth with firm level bottoms. Prepared excavations shall be approved by Geotechnical Engineer. Excavations shall be free of loose or disturbed materials.

E. Excess Water Control: Keep all excavations free from standing water by pumping, draining, or providing proper protection against water intrusion. If soil becomes soft, soggy, or saturated, perform additional excavation to firm soil not affected by water.

F. Form Removal: Make all excavations of sufficient size to permit installation and removal of forms and all other required work.

G. Alternate Forming: Sides of structures may be formed by neat excavations where banks will stand without caving. If banks cave, provide forming as required and widen excavation to permit forming, bracing and inspection. Form all grade beams.

3.4 BACKFILLING

A. Method: After concrete has been placed, forms removed and concrete work approved, backfill the excavations with earth to indicated or required grades. Carry on backfilling simultaneously on each side of walls or grade beams. Remove all rubbish and wood from the excavations before placing backfill.

B. Concrete Protection: Prior to placing any backfill, adequately cure all concrete and provide any bracing required to ensure the stability of the structure. Protect waterproofing and damp-proofing against damage in a manner acceptable to the Engineer. Remove bracing as backfill operations progress.

C. Material: Use the material from the excavations for backfilling, subject to approval by the Soils Testing Agency. The earth shall be free from debris, large clods, or stones.

D. Lifts: Place backfill in six inch (6") loose layers, bring to optimum moisture content and compact to 90% of maximum density, sloping down and away from the structures being backfilled.

E. Moisture: Rigidly control the amount of water used to ensure optimum moisture conditions for the type of fill material used. Excessive amounts of water causing saturation of earth will not be permitted. Compaction by flooding or jetting is prohibited.

3.5 GRADING

A. Slopes: Grade to finish grades indicated on Drawings, with uniform slopes between all points.

B. Subgrades: Blade to required grade and roll or tamp subgrades for exterior slabs, decks and paving.

3.6 CLEAN-UP

A. Disposal: Haul away rubbish, debris, and rocks from site promptly and dispose of legally. Burning rubbish on site is prohibited.

B. Dust and Noise Abatement: During entire period of construction keep area and material being loaded sprinkled to reduce dust in air and annoyance to premises and surrounding property.

END OF SECTION

SECTION 02400 – DEMOLITION AND STRUCTURE MOVING

PART 1 – GENERAL

1.1 REQUIREMENT

A. Items required to be removed:
   1. Reference plans for existing items to be removed. Removable items may include, but are not limited to pump station building, pool deck, and pipes.

1.2 REGULATORY REQUIREMENTS

A. Conform to applicable codes for disposal of debris.

B. Coordinate removal work with utility companies or appropriate party.

PART 2 – PRODUCTS – NOT USED

PART 3 – EXECUTION

3.1 PREPARATION

A. Obtain advance approval from ENGINEER for dimensions and limits of removal work.

B. Identify known utilities below grade. Stake and flag locations.

3.2 PROTECTION

A. Protect following from damage or displacement:
   1. Adjacent public and private property.
   2. Trees, plants, and other landscape features designated to remain.
   3. Utilities designated to remain.
   4. Pavement and utility structures designated to remain.
   5. Bench marks, monuments, and existing structures designated to remain.

3.3 REMOVALS

A. Remove pavements and structures by methods that will not damage underground utilities. Do not use drop hammer near existing underground utilities.

B. Minimize amount of earth loaded during removal operations.

C. Where existing pavement is to remain, make straight saw cuts in existing pavement to provide clean breaks prior to removal. Do not break concrete pavement or base with drop hammer unless concrete or base has been saw cut to minimum depth of 2 inches.

D. Unless noted otherwise or indicated in the Contract Documents, existing ends of pipe culverts or end of sewers which are to remain, shall have an 8-inch-thick masonry plug in pipe installed in the end of the pipe prior to backfill, with the backfill constructed in accordance with requirements of the applicable Sections of Division 31 – Earthwork.

3.4 BACKFILL

A. Backfill of removal areas shall be in accordance with requirements of these Specifications.

3.5 DISPOSAL

A. Inlet frames, grates, and plates; and manhole frames and covers, may remain City property. Disposal shall be in accordance with requirements these Specifications.

B. Remove from site, debris resulting from work under this section in accordance with requirements of these Specifications.

END OF SECTION

SECTION 02419 – SELECTIVE DEMOLITION

PART 1 – GENERAL

1.1 SUMMARY

A. Section includes:
   1. Selective demolition, dismantling, cutting, and alterations as indicated, specified, and necessary for the completion of the Contract.
   2. Rerouting or offsetting existing utilities, such as piping, conduits, and wiring.
   3. Removing demolished materials not indicated to be salvaged, from the site.
   4. Patching, repairing and finishing existing items to remain to the specified condition with an invisible transition, under normal lighting conditions at the site, between new and existing.
   5. Preparation and cleaning of surfaces as required to install new work and finishes.
   6. Protection of work to remain.
   7. Protection of equipment to be removed and reused.

B. NIC work: Encapsulation, removal and disposal of asbestos and other hazardous materials.

1.2 DEFINITIONS

A. Remove: Detach items from existing construction and dispose of them off-site unless indicated to be salvaged or reinstalled.

B. Remove and Salvage: Detach items from existing construction, in a manner to prevent damage, and deliver to OWNER ready for reuse.

C. Remove and Reinstall: Detach items from existing construction, in a manner to prevent damage. Store on the pool deck covered, unless directed otherwise by the City.

D. prepare for reuse, and reinstall where indicated.

E. Existing to Remain: Leave existing items that are not to be removed and that are not otherwise indicated to be salvaged or reinstalled.

F. Dismantle: To remove by disassembling or detaching an item from a surface, using gentle methods and equipment to prevent damage to the item and surfaces; disposing of items unless indicated to be salvaged or reinstalled.

1.3 MATERIALS OWNERSHIP

A. Unless otherwise indicated, demolition waste becomes property of CONTRACTOR.

B. Historic items, relics, antiques, and similar objects including, but not limited to, cornerstones and their contents, commemorative plaques and tablets, and other items of interest or value to OWNER that may be uncovered during demolition remain the property of OWNER.
   1. Carefully salvage in a manner to prevent damage and promptly return to OWNER.

1.4 ADMINISTRATIVE REQUIREMENTS

A. Scheduling and Sequencing:

B. Pre-demolition meeting:
   1. Prior to start of demolition, arrange a meeting between the subcontractor that will be responsible for the work of this Section, the CONTRACTOR, and the Architect to review existing conditions, the Drawings, and the Specifications.
   2. Review structural load limitations of existing pool deck.
   3. If more than one trade will be responsible for the successful performance of the work

of this Section, these trades shall attend the meeting.
4. Identify areas of concern and remedial measures.
5. Take photographs of the areas of concerns, before and after remedial measures are taken.
6. Review areas where existing construction is to remain and requires protection.
7. Record meeting minutes and distribute copy to all concerned, including the Architect, within 48 hours of the meeting.

1.5 SUBMITTALS

A. Qualification Data: For refrigerant recovery technician.

B. Proposed Protection Measures: Submit report, including Drawings, that indicates the measures proposed for protecting individuals and property, for environmental protection, for dust control and, for noise control. Indicate proposed locations and construction of barriers.

C. Schedule of Selective Demolition Activities: Indicate the following:
1. Detailed sequence of selective demolition and removal work, with starting and ending dates for each activity. Ensure OWNER's site operations are uninterrupted.
2. Interruption of utility services. Indicate how long utility services will be interrupted.
3. Coordination for shutoff, capping, and continuation of utility services.
4. Use of elevator and stairs.
5. Coordination of OWNER's continuing occupancy of portions of existing building and of OWNER's partial occupancy of completed Work.

D. Pre-demolition Photographs or Video: Show existing conditions of adjoining construction, including finish surfaces, that might be misconstrued as damage caused by demolition operations. Submit before Work begins.

E. Warranties: Documentation indicating that existing warranties are still in effect after completion of selective demolition.

F. Inventory: Submit a list of items that have been removed and salvaged.

1.6 FIELD CONDITIONS

A. Conditions existing at time of inspection for bidding purpose will be maintained by OWNER as far as practical.

B. Notify Architect of discrepancies between existing conditions and Drawings before proceeding with selective demolition.

C. Hazardous Materials: It is not expected that hazardous materials will be encountered in the Work.
1. Hazardous materials will be removed by OWNER before start of the Work.
2. If suspected hazardous materials are encountered, do not disturb; immediately notify Architect and OWNER. Hazardous materials will be removed by OWNER under a separate contract.

D. Storage or sale of removed items or materials on-site is not permitted.

E. Utility Service: Maintain existing utilities indicated to remain in service and protect them against damage during selective demolition operations.
1. Maintain fire-protection facilities in service during selective demolition operations.

PART 2 – PRODUCTS

2.1 PERFORMANCE REQUIREMENTS

A. Regulatory Requirements: Comply with governing EPA notification regulations before

beginning selective demolition. Comply with hauling and disposal regulations of authorities having jurisdiction.

B. Standards: Comply with ASSP A10.6 and NFPA 241.

2.2 MATERIALS

A. CONTRACTOR's option, except that materials used for patching shall be identical to the existing.

PART 3 – EXECUTION

3.1 EXAMINATION

A. Verify that utilities have been disconnected and capped before starting selective demolition operations.

B. Review Project Record Documents of existing construction or other existing condition and hazardous material information provided by OWNER. OWNER does not guarantee that existing conditions are same as those indicated in Project Record Documents.

C. Verify that hazardous materials have been remediated before proceeding with building demolition operations.

3.2 PREPARATION

A. Protection:
   1. Do not begin demolition until temporary partitions, barricades, warning signs and other forms of protection are installed.
   2. Protect trees, plants, utilities, and existing improvements that are not to be removed from injury or damage resulting from the CONTRACTOR's operation. Replace damaged landscaping, improvements and utilities in kind.
   3. During demolition provide safeguards, including warning signs and lights, barricades, and the like, for protection of the public, CONTRACTOR's employees, and existing improvements to remain.

B. Noise control: Refer to other Sections of Division 01 – General Requirements.
   1. Exercise caution and care to prevent generation of unnecessary noise.
   2. Keep noise levels to the minimum possible.
   3. Discontinues noise producing operations, when requested by the OWNER, and reschedule at a mutually acceptable time.

C. Dust control: Control dust at all times.
   1. Provide dust-tight partitions to prevent dust escaping into other parts of the building where demolition is not in progress, as specified in other Sections of Division 01 – General Requirements.
   2. Assume liability for claims related to flying dust caused by this work.

D. Water control:
   1. Control the use of water to prevent damage to the existing facility and improvements to remain. Provide wet vacuum equipment where water, such as waste cooling water from concrete sawing.
   2. Assume liability for claims related to water seepage and leakage caused by this work.

E. Security: Coordinate security with the OWNER.
   1. Take necessary precautions to keep trespassers out of demolition areas.
   2. Properly secure demolition areas from entry when demolition is not in progress but do not block required exit-ways.

F. Safety:
   1. If at any time the safety of existing construction appears to be endangered, take immediate measures to support such endangered construction; cease operations and immediately notify the Architect.
   2. Do not resume demolition until Architect's instructions are received.

3.2 SELECTIVE DEMOLITION

A. Existing conditions:
   1. Intent of Drawings is to show existing conditions with information developed from field surveys and to generally show the extent and type of demolition required.
   2. Make a detailed survey of existing conditions prior to commencing demolition, and report discrepancies or conflicts between Drawings and actual conditions in writing to the Architect for clarifications and instructions.
   3. Do not proceed where such conflicts or discrepancies occur prior to receipt of Architect's instructions.

B. The CONTRACTOR shall be fully responsible for the adequacy and installation of temporary shoring and bracing systems used during demolition.

C. Demolition shall be performed by skilled and properly equipped personnel.

D. Remove existing construction only to the extent necessary for the proper installation of new construction and junction with existing materials. Cut back finished surfaces to straight, plumb or level lines as required.

E. If unanticipated conditions which conflict with intended function or design are encountered, investigate and measure both nature and extent of the conflict.
   1. Submit report to Architect in written, accurate detail.
   2. Pending receipt of directive from Architect, rearrange demolition schedule as necessary to continue overall job progress without delay.

F. Where openings are cut oversize or in improper location, replace to excess removed material, to the Architect's satisfaction, at no additional cost to the OWNER.

G. Coordinate demolition with other trades to assure the proper sequence, limits, methods and time of performance. Schedule demolition so as to impose a minimum of hardship on the present operation of the facilities and the performance of the work of other trades.

H. Whenever possible use small hand or small power tools designed for sawing or grinding; whenever possible avoid the use of tools with a hammering and chopping motion. Cut through finished surfaces from the exposed or finished side into concealed surfaces.

I. In general remove materials as follows:
   1. Portland cement concrete:
      a. Locate and identify reinforcing bars in concrete prior to drilling and cutting, and protect structural integrity of existing work.
      b. Use removal methods that will not crack or structurally affect adjacent concrete constructions.
      c. Cut back concrete to clean, straight lines by saw cutting a minimum of 1 -inch deep; remainder of concrete may be jack-hammered.
      d. Where indicated and where it will not weaken the structure, cut off reinforcing bars flush with the face of the concrete.
      e. Where existing reinforcing bars are shown to be bonded into new concrete or masonry, use caution not to bend or otherwise damage them while removing concrete cover. Protect existing rebar from corrosion until new concrete is cast.
      f. Where new concrete topping or cementitious setting bed will be cast on existing slabs, scarify or scab the surface to a profile of 1/4-inch to provide a mechanical

bond with topping or setting bed.

2. Utility Services and Mechanical/Electrical Systems:
   a. Existing Services/Systems to Remain: Maintain services/systems indicated to remain and protect them against damage.
   b. Existing Services/Systems to Be Removed, Relocated, or Abandoned: Locate, identify, disconnect, and seal or cap off utility services and mechanical/electrical systems serving areas to be selectively demolished.
      1) OWNER will arrange to shut off indicated services/systems when requested by CONTRACTOR.
      2) Arrange to shut off utilities with utility companies.
      3) If services/systems are required to be removed, relocated, or abandoned, provide temporary services/systems that bypass area of selective demolition and that maintain continuity of services/systems to other parts of building.
      4) Disconnect, demolish, and remove fire-suppression systems, plumbing, and HVAC systems, equipment, and components indicated on Drawings to be removed.
         (a) Piping to Be Removed: Remove portion of piping indicated to be removed and cap or plug remaining piping with same or compatible piping material.
         (b) Piping to Be Abandoned in Place: Drain piping and cap or plug piping with same or compatible piping material and leave in place.
         (c) Equipment to Be Removed: Disconnect and cap services and remove equipment.
         (d) Equipment to Be Removed and Reinstalled: Disconnect and cap services and remove, clean, and store equipment; when appropriate, reinstall, reconnect, and make equipment operational.
         (e) Equipment to Be Removed and Salvaged: Disconnect and cap services and remove equipment and deliver to OWNER.

J. Materials not mentioned to be removed that interfere with new construction, except where structural integrity of the assembly is at risk, shall be cut to clean cut lines to provide for proper interface with new construction, or patching and repair, as required.

K. Site Access and Temporary Controls: Conduct selective demolition and debris-removal operations to ensure minimum interference with roads, streets, walks, walkways, and other adjacent occupied and used facilities.

3.3 SALVAGE

A. Removed and reuse items: Comply with the following.
   1. Clean salvaged items.
   2. Store items securely on the pool deck or in a location dictated by the city.
   3. Protect items from damage during transport and storage.
   4. See Schedule at the end of the Section for a list of remove and reuse equipment.

B. Title to materials:
   1. Except where indicated or specified otherwise, materials and equipment removed and not reused shall become the property of the CONTRACTOR and shall be removed from the site.
   2. The OWNER will not be responsible for the condition or loss of, or damage to, such property after notice to proceed.
   3. Material and equipment shall not be viewed by prospective purchasers or sold on the site.

C. Existing items to remain: Protect construction indicated to remain against damage and soiling during selective demolition. When permitted by Architect, items may be removed

to a suitable, protected storage location during selective demolition and cleaned and reinstalled in their original locations after selective demolition operations are complete.

3.4 PATCHING

A. Patch materials to remain when damaged by demolition.

B. Finish material and appearance of the patch or repair shall match the existing contiguous materials and finishes in all respects, as approved by the Architect.

3.5 CLEAN-UP/DISPOSAL

A. Debris, waste, and removed materials, other than items to be salvaged, are CONTRACTOR's property for legal disposal off the site.

B. Continuously clean-up and remove these items and do not allow to accumulate in the building and on the site.

C. Protection of existing work:
   1. Install protection before activities along protected adjacent building
   2. Activate each fire sprinkler alarm valve system as soon as roof is installed.
   3. Restore surfaces of existing building to original condition where damaged due to work of this Contract or due to insufficient protection. Pay for repair of damage to contents.

3.6 SELECTIVE DEMOLITION SCHEDULE

A. Remove: pump room concrete slab, pump room building, chain link fence, gate, utility lines, pump, access hatch, chemical controller, backwash pit, tree, electrical panel, storage shed, etc.

B. Remove and Reinstall: Filter, Basket strainer, chlorine tank, acid tank, eye wash station, chemical dosing pump, heater, pressure sustaining pump, etc.

C. Existing to Remain: utility lines, pool piping, pool deck, street lights, pool lights, signage, etc.

END OF SECTION

DIVISION 03
CONCRETE

SECTION 03100 – CONCRETE FORMWORK

PART 1 – GENERAL

1.1 SUMMARY:

A. Section Includes:
1. Design and construction of formwork for concrete.
2. Setting in forms, all anchor bolts, metal inserts, sleeves, etc., embedded in concrete.
3. Miscellaneous concrete work, including but not limited to areaways, cast-in-place trenches, pits, equipment bases, and other items as shown or required to complete all Work.

B. Related Work Specified Elsewhere:
1. Furnishing and placing reinforcing for cast-in-place concrete.
2. Furnishing, placing, finishing, and curing of cast-in-place concrete.
3. Placing of pipes, foam, lead brick, trenches, sleeves, inserts, and other items embedded in cast-in-place concrete as indicated on the construction drawings (approved by OWNER'S Representative).

1.2 REFERENCES

A. Standard references shall conform to current edition of the following specifications relating to work of this Section:
1. ACI 347, Current Edition: Recommended Practice for Concrete Formwork
2. ACI 301, Current Edition: Specifications for Structural Concrete
3. APA: Form V345 Plywood for Concrete Forming
4. APA: Grading Rules
5. NFPA: National Specifications for Wood Construction

1.3 SUBMITTALS:

A. Comply with pertinent provisions of Division 1 – General Requirements.

B. Shop Drawings: Submit shop drawings including plans, elevations and sections showing form pattern layouts of all exterior and interior concrete dimensioned to precisely locate grooves, embedded items, block outs. Contractor's proposed location of construction joints not indicated on the Drawings, and similar features. Shop drawings shall be drawn to scale and shall be coordinated with all other disciplines including but not limited to structural steel, mechanical, electrical, etc. Review and approval will not include form strength and adequacy.

C. Product Data: Provide data and specifications for each of the following (As Applicable):
1. Form sealer
2. Form release compound
3. Form ties and spreaders
4. Manufacturer's installation instructions

D. Record Document: Keep an accurate record of the dates of removal of forms, form shores and re-shores, and furnish digital copies to the OWNER'S Representative.

1.4 QUALITY ASSURANCE:

A. Comply with pertinent provisions of Division 1.

B. Construct forms according to ACI 347 – Recommended Practice for Concrete Formwork, and according to ACI 347 – Recommended Practice for Concrete Formwork, and conforming to tolerances specified in ACI 301 – Specifications for Structural Concrete for

Buildings, as applicable, unless exceeded by requirements of OWNER'S Representative or otherwise indicated or specified.

1.5 DELIVERY, STORAGE, AND HANDLING:

A. Comply with pertinent provisions of Division 1 – General Requirements.

B. Deliver materials for forms in timely manner to ensure uninterrupted progress.

C. Store materials by methods that prevent damage and permit ready access for inspection and identification.

PART 2 – PRODUCTS

2.1 MATERIALS:

A. Form lumber: WCLIB "Construction" grade or better, WWPA No. 1 or ENGINEER-approved equal.

B. Form plywood: PS 1 83, Group I, Exterior Grade B-B Plyform or better, minimum 5-ply and 3/4" thick for exposed locations, and not less than 5/8" thick for unexposed locations, grade marked, not mill oiled. Plywood having medium or high density overlay is acceptable.

C. Coated form plywood: For exposed painted concrete, plastic overlaid plywood of grade specified above, factory coated with a form coating and release agent "Noxcrete" or ENGINEER-approved equal.

D. Form ties: Prefabricated rod, flat band, wire, internally threaded disconnecting type, or equal, not leaving metal within 1-1/2" of concrete surface.

E. Form coating: Non-staining clear coating free from oil, silicone, wax, not grain-raising, "Formshield" by A.C. Horn, Inc., "Release" by Burke Concrete Accessories, or "Cast-Off" by Sonneborn Building Products or ENGINEER-approved equal. Where form liners are used, provide form coatings recommended by form liner manufacturer.

F. Form liner: Rigid or resilient type by L.M. Scofield, Labrado Forms, Symons, Greenstreak, or ENGINEER-approved equal, types shown or approved by OWNER'S Representative, matching Sample approved by OWNER'S Representative.

PART 3 – EXECUTION

3.1 WORKMANSHIP

A. Rigidly construct forms to prevent mortar leakage, sagging, displacement or bulging between studs. Use clean, sound form material, coated with specified materials only, not oil. Provide backing on all plywood joints.

B. Sides of all grade beams shall be formed, unless permission is obtained to place concrete directly against earth. Remove formwork prior to backfilling operations.

3.2 FORM ERECTION AND REMOVAL

A. Conform to ACI 301 and ACI 347 except as exceeded by the requirements of CBC Code, regulatory agencies, or herein.

B. Construction: Coat forms with the specified resin coating, not form oil. Construct forms to exact shapes, sizes, lines, and dimensions required to obtain level, plumb, and straight surfaces. Make forms easily removable without hammering or prying against concrete. Space forms apart with metal spreaders. Construct forms to accurate alignment, location, and grades, and provide against sagging, leakage of concrete mortar, or displacement occurring during and after placing of concrete. Coordinate installation of inserts in forms

according to Shop Drawings and requirements for work of other sections. Tolerances for finished formwork shall conform to ACI 301, Section 4.3.

C. Form Joints: Fill joints to produce smooth surfaces, intersections, and arises. Use polymer foam or equivalent fillers at joints and where forms abut or overlap existing concrete to prevent leakage of mortar.

D. Cleanouts and Cleaning: Provide temporary openings in all wall forms and other vertical forms for cleaning and inspection. Clean forms and surfaces to receive concrete prior to placing.

E. Re-Use: Clean and recondition form material before re-use.

F. Form Removal: Do not remove concrete forms until concrete attains sufficient strength to support its own weight and all superimposed loads as determine by testing field cured concrete cylinders, but not sooner than specified in ACI 347, paragraph 3.6.2.3, or Title 24, Section 1906.A.2. Vertical formwork for CIP concrete may be removed no sooner than 7 days following concrete placement, provided that contractor can demonstrate that no sloughing or sagging of concrete will occur. Avoid damage concrete surfaces during form removal.

3.3 FORMWORK TOLERANCES:

A. Finish Lines: Position formwork to maintain hardened concrete finish lines within following permissible deviations.
   1. Variation from Plumb:
      a. In 10' 0": ¼-inch
   2. Variation from Level or Grades Indicated:
      a. In 10' 0": ¼-inch

B. Slab Openings: Variations in size and location of sleeves and slab openings shall not exceed 1/4 inch.

3.4 SURVEY AND ADJUSTMENT:

A. Check forms before and during placement of concrete, using an instrument, and make corrections as work proceeds.

3.5 EMBEDDED PIPING AND ROUGH HARDWARE:

A. Comply with Title 24, Section 1906A.3. Where work of other sections require openings for passage of pipes, conduits, ducts, and other inserts in the concrete, obtain all dimensions and other information. All necessary pipes, trenches, trench cover seat, or other required inserts shall be accurately installed as part of the work of other sections, according to following requirements.

B. Pipes: Locate embedded pipes where specifically indicted on the construction drawings (approved by OWNER’S Representative).

3.6 FIELD QUALITY CONTROL

A. Inspection: Obtain special inspection and approval of forms before placing structural concrete. Notify OWNER’S representative of any deficiencies.

END OF SECTION

SECTION 03200 – CONCRETE REINFORCEMENT

PART 1 – GENERAL

1.1 SUMMARY

A. Section Includes:
   1. Reinforcing bars for cast-in-place concrete.
   2. Accessories, including but not limited to, chairs and tie wires.

1.2 REFERENCES

A. Standard references shall conform to the following specifications relating to work of this Section:
   1. ACI 117, Standard Tolerances for Concrete Construction and Materials.
   2. ACI 315, 2004 Edition: Details and Detailing of Concrete Reinforcement.
   3. CRSI, 2002 Edition: Manual of Standard Practice for Reinforced Concrete Construction.

1.3 SUBMITTALS:

A. Comply with pertinent provisions of Division 1.

B. Shop Drawings: Submit shop drawings which should include complete layout plans, sections, details for congested conditions, typical bending diagrams, offsets, splice lengths and locations. Shop drawings shall be drawn to scale and shall accurately show size, shape, and location of bars in the structure and be coordinated with all other disciplines including but not limited to structural steel, mechanical, electrical, equipment vendor, etc.

C. Reinforcement Mill Certification: Submit reinforcement mill certification and test reports per Section 1.4 below.

D. Submit Environmental Product Declaration for reinforcing steel to OWNER'S Representative to comply with Buy Clean California CA Requirements.

1.4 QUALITY ASSURANCE:

A. Source Quality Control: Refer to Division 1 for general requirements and to following paragraphs for specific procedures. Testing Laboratory shall perform following conformance testing, shall select test samples of bars, ties, and stirrups from the material at the site or from place of distribution, each sampling including at least two 18" long pieces, and perform the following tests according to ASTM A706.
   1. Identified Bars: If samples are obtained from bundles as delivered from the mill, identified as to heat number, accompanied by mill analyses and mill test reports, and properly tagged with Identification Certificate so as to be readily identified, perform one tensile and one bend test for each 10 tons or fraction thereof of each size of bars. Submit mill reports when samples are selected. Include the following:
      a. Source of steel
      b. Description
      c. Heat number
      d. Yield point
      e. Ultimate tensile strength
      f. Elongation percentage in 8 in. length
      g. Bend test results
   2. Unidentified Bars: When positive identification of reinforcing bars cannot be made and when random samples are obtained, perform tests for each 2.5 tons or fraction thereof, one tensile and one bend test from each size of bars in accordance with CBC 1929.2.

1.5 MARKING, SHIPPING AND DELIVERY:

A. Comply with pertinent provisions of Division 1.

B. Bundle bars, tag with identification, and transport and store so as not to damage any material. Use metal tags indicating size, length and other marking shown on placement drawings.

PART 2 – PRODUCTS

2.1 MATERIALS:

A. Reinforcing bars: ASTM A615, Grade 60, unless otherwise indicated on drawings.

B. Tie wire: ASTM A82, Annealed copper-bearing steel, 16.5 gauge minimum.

C. Bolsters, Chairs, Spacers, and Other Devices for Spacing, Supporting, and Fastening Reinforcement in Place.
   1. Use wire bar type supports complying with CRSI recommendations, unless otherwise indicated.
   2. Unexposed concrete: Bar supports and spacers of standard bright basic wire with upturned legs.
   3. For slabs on grade, use 3000 psi precast concrete “Dobies” with two 16.5 gauge embedded wires each way, a minimum of 2" x 2" wide and the appropriate height for the required reinforcement clear cover.
   4. Tie Wire: Minimum 16.5 gauge annealed type.
   5. Do not use wood, brick, or other non-complying material.

D. Mechanical Couplers and Splices for Reinforcing Steel
   1. Lenton threaded or interlock couplers by Erico (ICBO ER-3967),
   2. Cadweld by Erico (ICBO ER-3967),
   3. Xtender by Headed Reinforcement Corporation (ICBO ER-5309),
   4. or ENGINEER-approved equal

2.2 FABRICATION OF REINFORCING BARS:

A. Comply with CRSI Manual of Standard Practice for Reinforced Concrete Construction for fabrication of reinforcing steel.

B. Bending and Forming: Fabricate bars of the indicated sizes and bend and form to required shapes and lengths by methods not injurious to materials. Do not heat reinforcement for bending. Bend bars No. 6 size and larger in the shop only. Bars with unscheduled kinks or bends are subject to rejection. Use only tested bar materials approved by OWNER’S Representative.

C. Locate reinforcing splices not indicated on the drawings at point of minimum stress. Submit location of splices to OWNER’S Representative for review.

PART 3 – EXECUTION

3.1 INSTALLATION OF REINFORCING:

A. Provide additional reinforcing bars at slab openings as required. Before placing bars, and again before concrete is placed, clean bars of loose mill scale, oil, or any other coating that might destroy or reduce bond.

B. Securing in Place: Accurately place bars and wire tie in precise position. In order to be tied securely, so as to prevent movement during concrete placement, achieved by tying no less than and no more than every 5th intersection. Bend ends of wire ties away from the forms. Wire tie bars to corners of ties and stirrups. Support bars according to the current edition of "Recommended Practice for Placing Bar Supports" of Concrete

Reinforcing Steel Institute, using accessories (approved by OWNER'S Representative) and chairs. Place precast concrete cubes with embedded wire ties to support reinforcing steel bars in concrete placed on grade and in footings. Use care not to damage vapor barriers where they occur.

C. Clearances: Maintain minimum clear distances between reinforcing bars and face of concrete as indicated on Structural Drawings.

D. Splices: Lap splices as shown or required to develop the full strength or stress of bars. Stagger splices in horizontal wall bars at least 48" longitudinally in alternate bars and opposite faces.

E. Maintaining Bars in Position: Take adequate precautions to assure that reinforcing position and spacing is maintained during placement of concrete.

F. Splice Devices:
   1. Type and manufacture, noted on drawings. If substitution is requested Contractor to supply manufacturer calculations and supporting data showing proposed substitution conforms to requirements indicated and supplied.
   2. Install in accordance with manufacturer's written instructions.
   3. Splice in a manner developing at least 125% of the yielding strength of the bar in tension or compression.

3.2 FIELD QUALITY CONTROL:

A. Comply with pertinent provisions of Division 1.

B. Supervision: Perform Work to this Section under supervision of a capable superintendent.

C. Inspection: Obtain inspection and approval of reinforcing before concrete is placed as required by CBC Sect. 1701A.

D. Testing and inspection of splice devices for mechanical couplers – For Lenton, Cadweld and Xtender couplers or ENGINEER-approved equal, special inspection is required in accordance with CBC 1701A, as applicable, and per manufacturer's specifications.

END OF SECTION

SECTION 03300 – CAST-IN-PLACE CONCRETE

PART 1 – GENERAL

1.1 SUMMARY

A. Section Includes:
1. Furnishing, placing, patching, and initial curing of cast-in-place concrete unless otherwise specified.
2. Grout and drypack, except as otherwise specified.
3. Placing of dowels, pipes, foam, lead brick, trenches, sleeves, inserts, and other embedded items in cast-in-place concrete.
4. Vapor barrier under interior floor slabs on grade.

B. Related Work Specified Elsewhere:
1. Preparation and grading of earth subgrade under concrete.
2. Furnishing, erection, and removal of forms.
3. Furnishing and placing reinforcing for cast-in-place concrete.
4. Finishing and final curing of cast-in-place concrete.

C. REFERENCES- Standard references shall conform to the following specifications relating to work of this Section:
1. ACI 117: Recommended Tolerances for Concrete Construction and Materials.
2. ACI 211.1: Standard Practice for Selecting Proportions for Normal, Heavyweight, and Mass Concrete.
3. ACI 301: Specifications for Structural Concrete for Buildings.
4. ACI 302: Guide for Concrete Floor and Slab Construction.
5. ACI 304, Guide for Measuring, Mixing, Transporting and Placing Concrete.
6. ACI 304.2: Placing Concrete by Pumping Methods.
7. ACI 305: Hot Weather Concreting
8. ACI 306: Cold Weather Concreting
9. ACI 308: Standard Practice for Curing Concrete
10. ACI 309: Recommended Practice for Consolidation of Concrete.
11. ACI 318: Building Code Requirements for Reinforced Concrete.
12. South Coast Air Quality Management Districts and Federal Air Quality: Regulation 40 CFR 52.254.

1.2 SUBMITTALS

A. Comply with pertinent provisions of Division 1 – General Requirements.

B. Shop Drawings: Submit shop drawings showing locations and types of control/ construction / expansion joints and structural concrete mix designs. Shop drawings shall be drawn to scale and shall include layout plans and sections.

C. Product Data: Submit the following conforming to CBC 1910.1:
1. Mill certificates for Portland cement.
2. Certification and testing results for aggregates.
3. Manufacturer’s data and certification of Title 24 compliance for all admixtures.
4. Manufacturer’s data and certificates for all products including but not limited to curing materials, joint materials, and bonding agents.

D. Mix Designs: Submit mix designs for each concrete mix. Concrete mix design shall be prepared by an Independent Testing Laboratory and shall include all admixtures,

shrinkage data, location of use and shall be stamped and signed by a licensed Civil Engineer registered in the State of California.

E. Laboratory test reports for concrete mixes.

1.3 QUALITY ASSURANCE

A. Concrete Manufacturer: Furnish concrete from licensed commercial ready-mix concrete plant conforming to UBC Material, Testing and Installation Std. 19-3 and approved by OWNER'S Representative. Requirements herein govern when exceeding UBC Material, Testing and Installation Std. 19-3.

B. Allowable Tolerances: Construct concrete conforming to the tolerances specified in ACI 117 – Recommended Tolerances for Concrete Construction and Materials, as applicable, unless exceeded by requirements of regulatory agencies or otherwise indicated or specified.

C. Source Quality Control: Refer to the following paragraphs for specific procedures. Concrete materials which, by previous tests or actual service, have shown conformance may be used without testing when so approved by the OWNER'S Representative. Testing Laboratory shall perform following conformance testing.

1. Portland Cement: Furnish mill certificates in accordance with Title 24, 1929.1, and acceptable to OWNER'S Representative, showing conformance with requirements specified; otherwise, the Testing Laboratory shall perform one test for each 250 barrels of cement in accordance with UBC Std. 19-1 and 1929A. 1.

2. Aggregate for Normal Weight Concrete: Test the aggregate before and after concrete mix is designed and whenever character of aggregate varies or source of material is changed. Include a sieve analysis. Obtain samples of aggregates at the dry batching or ready-mix concrete plant in accordance with ASTM D75 and perform tests for the properties listed in the following table.

PHYSICAL PROPERTIES		
Physical Properties, units	Test Method	Minimum values
Sieve analysis	ASTM C136	
Organic impurities	ASTM C40	Fine aggregate not darker than reference standard color
Soundness	ASTM C88	Loss after 5 cycles not more than 8 percent of coarse aggregate, nor more than 10 percent of fine aggregate
Abrasion	ASTM C131	Weight loss not more than 10.5 percent after 100 revolutions, 42 percent after 500 revolutions
Deleterious materials	ASTM C33	
Materials finer than No. 200 sieve	ASTM C117	Not over 1 percent for gravel, 1.5 percent for crushed aggregate
Reactivity potential	ASTM C227, C289, C342	Ratio of silica released to reduction in alkalinity not to exceed 1.0.
Sand equivalent	ASTM D2419	California sand equivalent values operating range not below 71 percent

3. Concrete Batch Plant Inspections: NRMCA batch plant approved by OWNER'S Representative. Conform to Title 24 CCR 1929A.4. Continuous batch plant inspection is required for structural concrete, performed by an inspector approved by OWNER'S Representative. As allowed by Title 24 CCR, 1929.5, bonded deputy weigh master affidavit is acceptable for non-structural concrete and for slabs on grade; the weigh

master shall sign all load tickets and furnish legible digital copies to OWNER'S Representative, and Project Inspector.

D. Compliance with Regulations: All materials shall comply with the current rules and regulations of the local air quality management district, with the rules regarding volatile organic compounds, and with FDA rules and regulations for dangerous substances in construction products.

E. Comply with pertinent provisions of Division 1 – General Requirements.

F. Conform Title 24 CCR and ACI 305R when concreting during hot weather.

G. Conform Title 24 CCR and ACI 306R when concreting during cold weather.

H. Ready mix concrete shall be mixed and delivered in accordance with ASTM C94 and UBC standard 19-3 and 19-4. Each batch of concrete delivered at jobsite shall be accompanied by a time slip bearing the departure time and signature of the batch plant supervisor. Concrete shall be placed within 90 minutes after start of mixing.

1.4 CONCRETE MIX DESIGNS

Contractor's Independent Testing Laboratory shall design concrete mixes for normal weight concrete using Method C, Title 24 CCR, 1905.3.3.

A. Strength Requirements: Design mixes for structural concrete for minimum 28-day compressive strengths required by Drawings and Specifications. The trial batch strength for each mix shall exceed indicated or specified strength by 750 psi or a lesser amount based on the standard deviations of strength test records according to ACI 318.

B. Normal Weight Concrete Mix Designs: Design all mixes for workability and durability of concrete. Control the mixes in accordance with CBC 1905.2.3, ACI 211.1, Standard Practice for Selecting Proportions for Normal, Heavyweight, and Mass Concrete, and Chapter 4, ACI 318, Building Code Requirements for Reinforced Concrete. Make adjustments in cement content required for concrete strengths at Contractor's expense and do not exceed 0.50 absolute water-cement or cement plus fly ash ratio by weight conforming to design. Formed concrete shall contain an air-entraining agent producing air content of 3.5 percent to 6.5 percent by volume adjusted for weather conditions. Do not use calcium chloride or any admix containing such material. Admixtures containing a material releasing nitrates in solution are limited to 0.06 percent by weight for the chloride ion.

C. Maximum Aggregate Sizes: Not exceeding 3/4 of minimum clear space between bars and between bars and forms, nor larger than 1/5 of least dimensions between the forms. Design the mixes with 1" maximum size, except maximum 1-1/2" size for foundations and maximum 3/8" size at congested reinforcing or thin sections, as submitted by the contractor and approved by the OWNER'S Representative.

D. Pumped Concrete: Design concrete mixes specifically for pump placing with dry loose volume of fine aggregates not more than 47 percent of total aggregates; limit air entrainment to 5 percent maximum.

E. Secure the City Representative's approval of each mix design, including new mix designs required to be prepared should there occur a change in materials being used.

1.5 DELIVERY, STORAGE, AND HANDLING

A. Comply with pertinent provisions of the Contract Documents.

B. Deliver all materials in timely manner to ensure uninterrupted progress of the Work.

C. Store materials by methods that prevent damage and provide ready access for inspection and identification.

PART 2 – PRODUCTS

2.1 MATERIALS

Furnish materials meeting the test requirements of Paragraph "Source Quality Control" above, as applicable, and following requirements:

A. Portland cement: UBC Material, Testing and Installation Standards 19-1, Type II, low alkali. Do not change brand without prior approval.

B. White Portland cement: UBC Material, Testing and Installation Standards 19- 1, Type II/V ASTM C-150 gray cement, from one source approved by OWNER'S Representative.

C. Aggregates: Grading of combined aggregate shall conform to Title 24, Table 19B A-J.

1. Standard weight aggregates: ASTM C33, from approved pits, free from vegetable matter and of opaline, feldspar, or siliceous magnesium substances; all washed, clean, hard, fine-grained sound crushed rock or gravel; not over 5 percent by weight of flat, thin, elongated, friable, or laminated pieces (pieces having major dimension over 5 times average dimension) or more than 2 percent by weight of shale or cherty material.

D. Admixture: Admixtures shall comply to the requirements of Title 24, CCR, section 1903A.6. Admixtures to be used in concrete shall be subject to prior approval by OWNER'S Representative.

E. Pozzolan: ASTM C618, Class F or N Fly Ash, containing I percent or less carbon. Fly ash shall not be used in excess of 15 percent by weight of total cement quantity.

F. Water: From potable domestic source and conforming to the requirements of CBC 1903.4.

G. Curing Materials:

1. Liquid Curing compound: ASTM C309, fugitive dye dissipating type, complying with Rule II 13 of the South Coast Air Quality Management District and Federal Air Quality Regulation 40 CFR 52.254.

2. Curing Paper: A standard brand conforming to ASTM C171, Type 1 – Regular, Kure-N-Seal.

3. Evaporation retardant and finishing aid: Master Builders "Confilm," or ENGINEER-approved equal.

H. Vapor barrier: ASTM D2103, polyethylene sheeting, clear, 8 mil thickness, impact strength greater than 70 grams per mil, 10' minimum width. Provide minimum 2" wide waterproof plastic self-adhering tape for sealing edges and ends of sheeting.

I. Non-shrink grout:

1. Pre-packaged, non-metallic, non-gaseous, non-shrinking when tested in accordance with ASTM C1107 Grade B or C at a fluid consistency (flow cone) of 20 to 30 seconds.

2. For concealed areas: Master Builders "Embeco 885," or ENGINEER-approved equal, non-gas-forming and free of oxidizing catalysts and inorganic accelerators, used as dry or damp pack, or mixed to a 20-second flow (CRC-C 611), without segregation or bleeding at any temperature between 45 degrees F and 100 degrees F. Working time 30 minutes or more.

3. For exposed areas: Master Builders "Masterflow 928," or ENGINEER-approved equal, with same characteristics as specified for concealed areas.

4. Strength requirements: Non-shrink grout shall have a minimum 28 day compressive strength of 7000psi.

J. Drypack: Field mixture of I part Portland cement to 2 parts fine aggregate mixed to a damp consistency such that a ball molded in the hands will stick together and hold its shape. In lieu of field mixing, Contractor may use factory mixed drypack material, such as Master Builders "Set Grout" or ENGINEER-approved equal.

K. Epoxy Grout: Master Builders "Ceilcote 648," or ENGINEER-approved equal.

L. Bonding Agent: "Weld-Crete," manufactured by Larsen Products Co., P.O. Box 2127, Rockville, MD 20852, Master Builders "Concresive," or ENGINEER-approved equal.

M. Anti-Bonding Agent: “Thompsons Water Seal” as manufactured by A.E. Thompson, Inc., California or ENGINEER-approved equal.

N. Vapor Reduction and Concrete Curing System : "CS2000 Spray Apply Creteseal", as manufactured by Creteseal, or ENGINEER-approved equal.

O. Vapor Reduction and Concrete Curing System : "Concure Admixture and / or 2300 Cure and Seal", as manufactured by Concure Corporation, or ENGINEER-approved equal.

2.2 CONCRETE MIXING

Furnish ready-mixed concrete from an approved commercial off-site plant. Conform to UBC Material, Testing and Installation Standards 19-3, except materials, testing, and mix designs as specified herein. Use transit mixer trucks equipped with automatic devices for recording number of revolutions of drum. Comply with Title 24, 1905A.

A. Admixtures: All approved admixtures shall be introduced into the concrete at the batch plant. Field additions are not acceptable.

B. Slump: Adjust quantity of water so concrete at point and time of placing does not exceed the following slumps when tested according to ASTM C143. Use the minimum water necessary for workability required by part of structure being cast.

Part of Structure	Maximum Slump Inches*	Maximum Water-Cement Ratio
Slabs on grade, reinforced and non-reinforced	4	0.45
All other concrete	4	0.45

PART 3 – EXECUTION

3.1 PREPARATION FOR CONCRETE PLACING:

A. Remove all free water from forms before concrete is deposited. Remove hardened concrete, debris, and foreign materials from interior surfaces of forms, exposed reinforcing, and from surfaces of mixing and conveying equipment.

B. Wetting: Wet wood forms sufficiently to tighten up cracks or use an approved form release agent. Wet other materials sufficiently to reduce adsorption and to help maintain concrete workability.

C. Earth Subgrade: Dampen 24 hours before placing concrete, but do not muddy. Re-roll where necessary for smoothness and remove loose material.

D. Gravel Fill: Recompact disturbed gravel and bring to correct elevation.

E. Sand Beds or Subslab Drainage Fill: Recompact disturbed material and bring to correct elevation.

F. Vapor Barrier: Install under interior floor slabs on grade. Lap joints 6" in the direction of concrete spreading and tape seal. Seal the joints at walls and around penetrations with tape. Cover barrier with 2" layer of clean sand.

G. Screeds over Vapor Barrier: Use weighted pad or cradle type screeds and do not drive stakes through the vapor barrier or check with an instrument level, transit, or laser.

H. Notify OWNER'S Representative at least 24 hours before placing the concrete. Contractor to verify that the required reinforcement, dowels, inserts, and embedded items are in place and securely held.

3.2 CONCRETE PLACING:

A. Conveying and Placing: Comply with 1905.9 and 1905.10. Do not place concrete until reinforcing steel and forms or decks have been approved by the Inspector. Do not allow concrete to free fall from release points at mixer, hopper, tremie, or other conveying equipment in excess of 5 feet for concealed concrete or over 3 feet for exposed concrete. Deposit concrete so that surface is kept level throughout, with minimum being allowed to flow from one portion of forms to another. Place concrete within 90 minutes after water is first added to the batch. Place all concrete by methods that prevent segregation of materials.

1. Where new concrete is placed against or on old or existing concrete, apply bonding agent to surface of old concrete prior to placement of new concrete.

B. Joints: Comply with Title 24 1906.4. Locate joints in concrete only where shown or approved and obtain prior approval for points of stoppage of any pour. Clean and roughen surface of construction joints by removing entire surface and exposing 1/4" of clean coarse aggregate solidly embedded in mortar matrix by sandblasting, chipping, use of an approved retarder agent, or equal. Water and keep hardened concrete wet before placing the next lift or abutting concrete.

C. Compacting: Compact each layer of the concrete as placed with mechanical vibrators or equivalent equipment. Transmit vibration directly to concrete and in no case through the forms unless approved. Accomplish thorough compaction. Supplement by rodding or spading by hand adjacent to forms. Compact concrete into corners and angles of forms and around reinforcement and embedded fixtures. Recompact deep sections with congestion due to reinforcing steel as required.

D. Operation of Vibrators: Do not horizontally transport concrete in forms with vibrators nor allow vibrators to contact forms or reinforcing. Push vibrators vertically into the preceding layers that are still plastic and slowly withdraw, producing maximum obtainable density in concrete without creating voids or segregation. In no case disturb concrete that has partially set. Vibrate at intervals not exceeding two-thirds the effective visible vibration diameter of the submerged vibrator. Avoid excessive vibration that causes segregation.

E. Correction of Segregation: Before placing next layer of concrete, and at the top of each placement for vertical elements, remove all concrete containing excess water or fine aggregate, or showing deficiency of coarse aggregate, and fill the space with compacted concrete of correct proportions. Comply with Title 24, 1906A.4.

F. Slabs:

1. Compact concrete, bring 1/8" to 3/16" of coarse mortar to surface. Screed to elevation. Bull float or darby. Remove all bleed water. Float with wood hand floats or wait until the weight of a machine with steel float shoes can travel on the slab without sinking or disrupting the surface. Remainder of finishing operations shall be as specified per the City.

G. Slab Finishing

1. Concrete finish floors shall have a hard steel troweled finish unless indicated otherwise on the drawings. Place, strike off, consolidate, level and float to the proper elevation. Troweling shall begin after surface has received a float finish. The slab drying must proceed naturally and must not be hastened by the dusting on of dry cement or sand. Lightly tool all edges at construction joints.

3.3 CURING FORMED CONCRETE

A. Keep forms containing concrete in a wet condition until removed. Keep concrete continuously moist for not less than 7 days after placement. Keep concrete moist with a fine fog water spray until protected by curing media. Concrete to receive curing media as called for in section 2.1.G.

B. Use the water curing method, curing sheet material, or a clear liquid membrane-forming curing compound except as otherwise specified.

C. Do not use any type of finishing or curing materials or methods that interfere with the correct application or bonding of subsequent materials; verify exact requirements with all applicable trades.

3.4 PATCHING FORMED CONCRETE

A. Allow OWNER'S Representative to inspect concrete surfaces immediately upon removal of forms.

B. Immediately after stripping and before concrete is thoroughly dry, patch minor defects, form-tie holes, honeycombed areas, etc. with patching mortar. Patch shall match of adjacent surface unless otherwise noted. Remove ledges and bulges.

C. Compact mortar into place and neatly fill defective surfaces to produce level, true planes. After initial set, dress surfaces of patches mechanically or manually to obtain same texture as surrounding surfaces.

D. Cleaning:
   1. Ensure removal of bituminous materials, form release agents, bond breakers, curing compounds if permitted, or other materials employed in work of concreting which would otherwise prevent proper application of sealants, liquid waterproofing, or other delayed finishes or treatments.

3.5 GROUTING AND DRYPACKING

A. Install as indicated on the drawings, or as required. Where grouting and drypacking is part of the work of other sections, it shall conform to the following requirements, as applicable.

B. Drypacking: Mix materials thoroughly with minimum amount of water. Install drypack by forcing and rodding to fill voids and provide complete bearing under plates. Finish exposed surfaces smooth and cure with damp burlap or liquid curing compound.

C. Non-Shrink Grouting:
   1. Mixing: Mix the non-shrink grout material (approved by OWNER Representative) with sufficient water per manufacturer's recommendations.
   2. Application: Surfaces to receive the non-shrink grout shall be clean, and shall be moistened thoroughly immediately before placing the mortar. Before grouting, surfaces to be in contact shall be roughened and cleaned thoroughly, all loose particles shall be removed and the surface flushed thoroughly with neat cement grout immediately before the grouting mortar is placed. Place fluid grout from one side only and puddle, chain, or pump for complete filling of voids; do not remove the dams or forms until grout attains initial set. Finish exposed surfaces smooth, and cure as recommended by grout manufacturer.

3.6 DEFECTIVE CONCRETE

A. Concrete shall be deemed defective when:
   1. Tests on core or prism specimens fail to show strengths specified.
   2. Not formed as indicated or detailed.
   3. Not plumb or level per ACI 117-90. where so indicated or required to receive subsequent work.
   4. Not true to intended grades and levels.
   5. Cut, filled, or resurfaces, unless under direction of the OWNER'S Representative.
   6. Debris is embedded therein.
   7. Not fully in conformance with provisions of Contract Documents.
   8. Damaged by hot or cold weather conditions.
   9. Mixing time exceeds 90 minutes from ready-mix plant to time of deposit.
   10. Shows objectionable cracks, honeycombing, rock pockets, voids, spalling and exposed reinforcement, as determined by the OWNER'S Representative.

B. Remove and replace defective concrete or adequately strengthen and resurface in a manner acceptable to the OWNER'S Representative.

3.7 FIELD QUALITY CONTROL

A. Comply with pertinent provisions of Division 1

B. Level of Floors: Continuously monitor concrete placing to maintain level floor by use of an instrument level, transit, or laser.

C. Continuous Inspection: Construct structural concrete under continuous inspection of Inspector. Obtain inspection and approval of forms and reinforcing by OWNER'S Representative as required and by the Inspector before placing structural concrete.

D. Testing/Evaluation of Concrete: Conform to Title 24, 1903A.8 & 1905A.6. Testing Laboratory shall perform following tests. Samples for testing shall be obtained in accordance with ASTM C 172, and shall be taken from as close to point of placement as possible.
   1. Compressive Strength Tests: Cast one set of three or more cylinders from each days placing and each 150 cubic yards, or fraction thereof, or not less than once for each 2,000 square feet of surface area for slabs and walls, of each strength of structural concrete. Date cylinders, assign record number, and tag showing the location from which sample was taken. Also record slump test result of sample. Do not make more than two series of tests from any one location or batch of concrete.
   2. Test Cylinders: Samples will be made in accordance with ASTM C172. Cast cylinders according to ASTM C31; 24 hours later, store cylinders under moist curing conditions at about 70 F. Test according to ASTM C39 at 7 and 28 day ages. The remaining cylinder shall be kept in reserve in case tests are unsatisfactory.
   3. Control Test Cylinders: Cast a set of two or more cylinders for each day's placing of concrete for slabs supported on shoring. Place test cylinders on slabs represented by cylinders and cure the same as slabs. Test cylinders to determine proper times for removal of shores and reshoring. A strength test shall be the average of the compressive strengths of 2 cylinders made from the same sample of concrete and tested at 28 days.

E. Core Tests: Comply with Title 24 1905.6.4. If tests show that compressive strength of any concrete falls below required minimum at 28 day age, additional curing and testing of concrete which unsatisfactory test reports represent may be directed. Testing Laboratory shall take and test drilled cores as directed in accordance with ASTM C42. Contractor shall refill core holes with drypack concrete of the same compressive strength required for cored concrete. If core tests results are unsatisfactory, Contractor shall furnish required labor, equipment, and weights, and the Testing Laboratory shall conduct load testing on involved parts of building or structure as directed. Contractor shall bear additional curing

and test costs, including Testing Laboratory costs, for concrete not meeting required compressive strength at 28 day age even if testing demonstrates that concrete has eventually attained required minimum compressive strength, and all costs for required corrections or removals and replacements as directed and required for construction approved by OWNER'S Representative.

END OF SECTION

DIVISION 04
MASONRY

SECTION 04 22 00 – CONCRETE MASONRY UNITS

PART 1 – GENERAL

1.1 SUMMARY

A. Section Includes:
   1. Concrete masonry units.
   2. Decorative concrete masonry units.
   3. Mortar and grout.
   4. Steel reinforcing bars.
   5. Masonry joint reinforcement.
   6. Ties and anchors.
   7. Embedded flashing.
   8. Miscellaneous masonry accessories.

1.2 DEFINITIONS

A. CMU(s): Concrete masonry unit(s).

B. Reinforced Masonry: Masonry containing reinforcing steel in grouted cells.

1.3 PERFORMANCE REQUIREMENTS

A. Provide unit masonry that develops indicated net-area compressive strengths at 28 days.
   1. Determine net-area compressive strength of masonry from average net-area compressive strengths of masonry units and mortar types (unit-strength method) according to Tables 1 and 2 in ACI 530.1/ASCE 6/TMS 602.

1.4 ACTION SUBMITTALS

A. Product Data: For each type of product indicated.

B. Shop Drawings: For the following:
   1. Masonry Units: Show sizes, profiles, coursing, and locations of special shapes.
   2. Reinforcing Steel: Detail bending and placement of unit masonry reinforcing bars. Comply with ACI 315, "Details and Detailing of Concrete Reinforcement."
   3. Fabricated Flashing: Detail corner units, end-dam units, and other special applications.

C. Samples for Initial Selection:
   1. Decorative CMUs, in the form of small-scale units.
   2. Colored mortar.
   3. Weep holes/vents.
   4. Masonry ties.

D. Submit Environmental Product Declaration for reinforcing steel to OWNER's Representative to comply with Buy Clean California CA Requirements.

1.5 INFORMATIONAL SUBMITTALS

A. Qualification Data: Information shall be submitted to the OWNER's Representative and the OWNER's Testing Laboratory for review per the sections below.

B. Material Certificates: For each type and size of the following:
   1. Masonry units.
      a. Include material test reports substantiating compliance with requirements.
      b. For masonry units, include data and calculations establishing average net-area compressive strength of units.
   1. Cementitious materials. Include brand, type, and name of manufacturer.

2. Preblended, dry mortar mixes. Include description of type and proportions of ingredients.
3. Grout mixes. Include description of type and proportions of ingredients.
4. Reinforcing bars.
5. Joint reinforcement.
6. Anchors, ties, and metal accessories.

C. Mix Designs: For each type of mortar and grout. Include description of type and proportions of ingredients.
1. Include test reports for mortar mixes required to comply with property specification. Test according to ASTM C109/C109M for compressive strength, ASTM C1506 for water retention, and ASTM C91 for air content.
2. Include test reports, according to ASTM C1019, for grout mixes required to comply with compressive strength requirement.

D. Statement of Compressive Strength of Masonry: For each combination of masonry unit type and mortar type, provide statement of average net-area compressive strength of masonry units, mortar type, and resulting net-area compressive strength of masonry determined according to Tables 1 and 2 in ACI 530.1/ASCE 6/TMS 602.

E. Hot-Weather Procedures: Detailed description of methods, materials, and equipment to be used to comply with requirements.

1.5 QUALITY ASSURANCE

A. Source Limitations for Masonry Units: Obtain exposed masonry units of a uniform texture and color, or a uniform blend within the ranges accepted for these characteristics, from single source from single manufacturer for each product required.

B. Source Limitations for Mortar Materials: Obtain mortar ingredients of a uniform quality, including color for exposed masonry, from single manufacturer for each cementitious component and from single source or producer for each aggregate.

C. Masonry Standard: Comply with ACI 530.1/ASCE 6/TMS 602 unless modified by requirements in the Contract Documents.

1.6 PROJECT CONDITIONS

A. Protection of Masonry: During construction, cover tops of walls, projections, and sills with waterproof sheeting at end of each day's work. Cover partially completed masonry when construction is not in progress.
1. Extend cover a minimum of 24 inches down both sides of walls and hold cover securely in place.

B. Stain Prevention: Prevent grout, mortar, and soil from staining the face of masonry to be left exposed or painted. Immediately remove grout, mortar, and soil that come in contact with such masonry.
1. Protect base of walls from rain-splashed mud and from mortar splatter by spreading coverings on ground and over wall surface.
2. Protect sills, ledges, and projections from mortar droppings.
3. Protect surfaces of window and door frames, as well as similar products with painted and integral finishes, from mortar droppings.
4. Turn scaffold boards near the wall on edge at the end of each day to prevent rain from splashing mortar and dirt onto completed masonry.

C. Hot-Weather Requirements: Comply with hot-weather construction requirements contained in ACI 530.1/ASCE 6/TMS 602.

PART 2 – PRODUCTS

2.1 MASONRY UNITS, GENERAL

A. Defective Units: Referenced masonry unit standards may allow a certain percentage of units to contain chips, cracks, or other defects exceeding limits stated in the standard. Do not use units where such defects will be exposed in the completed Work.

B. Fire-Resistance Ratings: Where indicated, provide units that comply with requirements for fire-resistance ratings indicated as determined by testing according to ASTM E119, by equivalent masonry thickness, or by other means, as acceptable per the 2019 CBC.

2.2 CONCRETE MASONRY UNITS

A. Regional Materials: CMUs shall be manufactured within 500 miles of Project site from aggregates that have been extracted, harvested, or recovered, as well as manufactured, within 500 miles of Project site.

B Shapes: Provide shapes indicated and as follows, with exposed surfaces matching exposed faces of adjacent units unless otherwise indicated.

1. Provide square-edged units for outside corners unless otherwise indicated.

C. Integral Water Repellent: Provide units made with integral water repellent for exposed units.

1. Integral Water Repellent: Liquid polymeric, integral water-repellent admixture that does not reduce flexural bond strength. Units made with integral water repellent, when tested according to ASTM E514 as a wall assembly made with mortar containing integral water-repellent manufacturer's mortar additive, with test period extended to 24 hours, shall show no visible water or leaks on the back of test specimen.

D. CMUs: ASTM C90.

1. Density Classification: Normal weight unless otherwise indicated.
2. Size (Width): Manufactured to dimensions 3/8-inch less than nominal dimensions.

E. Decorative CMUs: ASTM C90.

1. Density Classification: Normal weight unless otherwise indicated.
2. Size (Width): Manufactured to dimensions specified in "CMUs" Paragraph.
3. Pattern and Texture:
   a. Standard pattern, ground-face finish.
   b. Provide decorative finish on exposed block ends, except at opening returns where sealant is required.
4. Colors: As selected by OWNER’s Representative from manufacturer's full range.

2.3 MORTAR AND GROUT MATERIALS

A. Regional Materials: Aggregates for mortar and grout shall be extracted, harvested, or recovered, as well as manufactured, within 500 miles of Project site.

B. Portland Cement: ASTM C150, Type I or II, except Type III may be used for cold-weather construction. Provide natural color or white cement as required to produce mortar color indicated.

A. Hydrated Lime: ASTM C207, Type S.

B. Portland Cement-Lime Mix: Packaged blend of portland cement and hydrated lime containing no other ingredients.

C. Mortar Pigments: Natural and synthetic iron oxides and chromium oxides, compounded for use in mortar mixes and complying with ASTM C979. Use only pigments with a record of satisfactory performance in masonry mortar.

1. Products: Subject to compliance with requirements, available products that may be incorporated into the Work include, but are not limited to, the following:

a. Davis Colors; True Tone Mortar Colors.
b. Lanxess Corporation; Bayferrox Iron Oxide Pigments.
c. Solomon Colors, Inc.; SGS Mortar Colors
d. or ENGINEER-approved equal

2. For mortar that is exposed to view, use washed aggregate consisting of natural sand or crushed stone.
3. For joints less than ¼-inch thick, use aggregate graded with 100 percent passing the No. 16 sieve.
4. White-Mortar Aggregates: Natural white sand or crushed white stone.
5. Colored-Mortar Aggregates: Natural sand or crushed stone of color necessary to produce required mortar color.

D. Aggregate for Grout: ASTM C404.

E. Cold-Weather Admixture: Non-chloride, noncorrosive, accelerating admixture complying with ASTM C494, Type C, and recommended by manufacturer for use in masonry mortar of composition indicated.

F. Water-Repellent Admixture: Liquid water-repellent mortar admixture intended for use with CMUs, containing integral water repellent by same manufacturer.

G. Water: Potable

2.4 REINFORCEMENT

A. Uncoated Steel Reinforcing Bars: ASTM A615, Grade 60.

B. Masonry Joint Reinforcement, General: ASTM A951/A 951M.
1. Exterior Walls: Hot-dip galvanized, carbon steel.
2. Wire Size for Side Rods: 0.187-inch diameter.
3. Wire Size for Cross Rods: 0.187-inch diameter.
4. Wire Size for Veneer Ties: 0.187-inch diameter.
5. Spacing of Cross Rods, Tabs, and Cross Ties: Not more than 16 inches o.c.
6. Provide in lengths of not less than 10 feet, with prefabricated corner and tee units.

C. Masonry Joint Reinforcement for Single-Wythe Masonry: Either ladder or truss type with single pair of side rods.

2.5 TIES AND ANCHORS

A. Materials: Provide ties and anchors specified in this article that are made from materials that comply with the following unless otherwise indicated.
1. Hot-Dip Galvanized, Carbon-Steel Wire: ASTM A82; with ASTM A153, Class B-2 coating.
2. Stainless-Steel Wire: ASTM A580, Type 304.
3. Galvanized Steel Sheet: ASTM A653, Commercial Steel, G60 zinc coating.
4. Steel Sheet, Galvanized after Fabrication: ASTM A1008 Commercial Steel, with ASTM A153, Class B coating.
5. Steel Plates, Shapes, and Bars: ASTM A36.

2.6 MISCELLANEOUS ANCHORS

A. Anchor Bolts: Headed steel bolts complying with ASTM A307, Grade A with ASTM A563 hex nuts and, where indicated, flat washers; hot-dip galvanized to comply with ASTM A153, Class C; of dimensions indicated.

2.7 EMBEDDED FLASHING MATERIALS

A. Metal Flashing: Provide metal flashing complying with Section 076200 "Sheet Metal Flashing and Trim" and as follows:

1. Fabricate through-wall flashing with snaplock receiver on exterior face where indicated to receive counterflashing.
2. Fabricate through-wall flashing with drip edge unless otherwise indicated. Fabricate by extending flashing ½-inch out from wall, with outer edge bent down 30 degrees and hemmed.
3. Metal Drip Edge: Fabricate from stainless steel. Extend at least 3 inches into wall and ½-inch out from wall, with outer edge bent down 30 degrees and hemmed.
4. Metal Sealant Stop: Fabricate from stainless steel. Extend at least 3 inches into wall and out to exterior face of wall. At exterior face of wall, bend metal back on itself for ¾-inch and down into joint ¼-inch to form a stop for retaining sealant backer rod.

B. Flexible Flashing: Use the following unless otherwise indicated:
1. EPDM Flashing: Sheet flashing product made from ethylene-propylene-diene terpolymer, complying with ASTM D4637, 0.040 inch thick.
   a. Products: Subject to compliance with requirements, available products that may be incorporated into the Work include, but are not limited to, the following:
      1) Carlisle Coatings & Waterproofing; Pre-Kleened EPDM Thru-Wall Flashing.
      2) Firestone Specialty Products; FlashGuard.
      3) Heckmann Building Products Inc.; No. 81 EPDM Thru-Wall Flashing.
      4) Hohmann & Barnard, Inc.; Epra-Max EPDM Thru-Wall Flashing
      5) or ENGINEER-approved equal.
   b. Provide preformed inside and outside corners of same material as flashing.

C. Application: Unless otherwise indicated, use the following:
1. Where flashing is indicated to receive counterflashing, use metal flashing.
2. Where flashing is indicated to be turned down at or beyond the wall face, use metal flashing.
3. Where flashing is partly exposed and is indicated to terminate at the wall face, use metal flashing with a drip edge or flexible flashing with a metal drip edge.
4. Where flashing is fully concealed, use metal flashing or flexible flashing.

D. Solder and Sealants for Sheet Metal Flashings.

E. Adhesives, Primers, and Seam Tapes for Flashings: Flashing manufacturer's standard products or products recommended by flashing manufacturer for bonding flashing sheets to each other and to substrates.

2.8 MISCELLANEOUS MASONRY ACCESSORIES

A. Compressible Filler: Pre-molded filler strips complying with ASTM D1056, Grade 2A1; compressible up to 35 percent; of width and thickness indicated; formulated from neoprene, urethane, or PVC.

B. Reinforcing Bar Positioners: Wire units designed to fit into mortar bed joints spanning masonry unit cells and hold reinforcing bars in center of cells. Units are formed from 0.148-inch steel wire, hot-dip galvanized after fabrication. Provide units designed for number of bars indicated.

2.9 MORTAR AND GROUT MIXES

A. General: Do not use admixtures, including pigments, air-entraining agents, accelerators, retarders, water-repellent agents, antifreeze compounds, or other admixtures unless otherwise indicated.
1. Do not use calcium chloride in mortar or grout.
2. Use Portland cement-lime mortar unless otherwise indicated.
3. Add cold-weather admixture (if used) at same rate for all mortar that will be exposed to view, regardless of weather conditions, to ensure that mortar color is consistent.

B. Preblended, Dry Mortar Mix: Furnish dry mortar ingredients in form of a preblended mix. Measure quantities by weight to ensure accurate proportions, and thoroughly blend ingredients before delivering to Project site.

C. Mortar for Unit Masonry: Comply with ASTM C270, Proportion Specification. Provide Type per structural drawings.

D. Grout for Unit Masonry: Comply with ASTM C476.
   1. Use grout of type indicated or, if not otherwise indicated, of type (fine or coarse) that will comply with Table 1.15.1 in ACI 530.1/ASCE 6/TMS 602 for dimensions of grout spaces and pour height.
   2. Proportion grout in accordance with ASTM C476, Table 1 or paragraph 4.2.2 for specified 28-day compressive strength indicated, but not less than 2,000 psi.
   3. Provide grout with a slump of 8 to 11 inches as measured according to ASTM C143.

PART 3 – EXECUTION

3.01 EXAMINATION

A. Examine conditions, with Installer present, for compliance with requirements for installation tolerances and other conditions affecting performance of the Work.
   1. For the record, prepare written report, endorsed by Installer, listing conditions detrimental to performance of work.
   2. Verify that foundations are within tolerances specified.
   3. Verify that reinforcing dowels are properly placed.

B. Before installation, examine rough-in and built-in construction for piping systems to verify actual locations of piping connections.

C. Proceed with installation only after unsatisfactory conditions have been corrected.

3.02 INSTALLATION, GENERAL

A. Build chases and recesses to accommodate items specified in this and other Sections.

B. Leave openings for equipment to be installed before completing masonry. After installing equipment, complete masonry to match the construction immediately adjacent to opening.

C. Use full-size units without cutting if possible. If cutting is required to provide a continuous pattern or to fit adjoining construction, cut units with motor-driven saws; provide clean, sharp, unchipped edges. Allow units to dry before laying unless wetting of units is specified. Install cut units with cut surfaces and, where possible, cut edges concealed.

3.03 TOLERANCES

A. Dimensions and Locations of Elements:
   1. For dimensions in cross section or elevation do not vary by more than plus ½-inch or minus ¼-inch.
   2. For location of elements in plan do not vary from that indicated by more than plus or minus ½-inch.
   3. For location of elements in elevation do not vary from that indicated by more than plus or minus ¼-inch in a story height or ½-inch total.

B. Lines and Levels:
   1. For bed joints and top surfaces of bearing walls do not vary from level by more than ¼-inch in 10 feet, or 1/2 inch maximum.
   2. For conspicuous horizontal lines, such as lintels, sills, parapets, and reveals, do not vary from level by more than 1/8-inch in 10 feet, ¼-inch in 20 feet, or ½-inch maximum.
   3. For vertical lines and surfaces do not vary from plumb by more than ¼-inch in 10 feet, 3/8-inch in 20 feet, or ½-inch maximum.

4. For conspicuous vertical lines, such as external corners, door jambs, reveals, and expansion and control joints, do not vary from plumb by more than 1/8-inch in 10 feet, ¼-inch in 20 feet, or ½-inch maximum.
5. For lines and surfaces do not vary from straight by more than ¼-inch in 10 feet, 3/8-inch in 20 feet, or ½-inch maximum.
6. For vertical alignment of exposed head joints, do not vary from plumb by more than ¼-inch in 10 feet, or ½-inch maximum.

C. Joints:
1. For bed joints, do not vary from thickness indicated by more than plus or minus 1/8 inch, with a maximum thickness limited to 1/2 inch.
2. For exposed bed joints, do not vary from bed-joint thickness of adjacent courses by more than 1/8 inch.
3. For head and collar joints, do not vary from thickness indicated by more than plus 3/8 inch or minus 1/4 inch.
4. For exposed head joints, do not vary from thickness indicated by more than plus or minus 1/8 inch.

3.04 LAYING MASONRY WALLS

A. Lay out walls in advance for accurate spacing of surface bond patterns with uniform joint thicknesses and for accurate location of openings, movement-type joints, returns, and offsets. Avoid using less-than-half-size units, particularly at corners, and, where possible, at other locations.

B. Bond Pattern for Exposed Masonry: Unless otherwise indicated, lay exposed masonry in running bond; do not use units with less than nominal 4-inch horizontal face dimensions at corners or jambs.

C. Lay concealed masonry with all units in a wythe in running bond or bonded by lapping not less than 2 inches. Bond and interlock each course of each wythe at corners. Do not use units with less than nominal 4-inch horizontal face dimensions at corners or jambs.

D. Stopping and Resuming Work: Stop work by racking back units in each course from those in course below; do not tooth. When resuming work, clean masonry surfaces that are to receive mortar before laying fresh masonry.

E. Built-in Work: As construction progresses, build in items specified in this and other Sections. Fill in solidly with masonry around built-in items.

F. Where built-in items are to be embedded in cores of hollow masonry units, place a layer of metal lath, wire mesh, or plastic mesh in the joint below and rod mortar or grout into core.

3.05 MORTAR BEDDING AND JOINTING

A. Lay hollow CMUs as follows:
1. With face shells fully bedded in mortar and with head joints of depth equal to bed joints.
2. With webs fully bedded in mortar in all courses of piers, columns, and pilasters.
3. With webs fully bedded in mortar in grouted masonry, including starting course on footings.
4. With entire units, including areas under cells, fully bedded in mortar at starting course on footings where cells are not grouted.

B. Lay solid masonry units with completely filled bed and head joints; butter ends with sufficient mortar to fill head joints and shove into place. Do not deeply furrow bed joints or slush head joints.

C. Set cast-stone trim units in full bed of mortar with full vertical joints. Fill dowel, anchor, and similar holes.
   1. Clean soiled surfaces with fiber brush and soap powder and rinse thoroughly with clear water.
   2. Allow cleaned surfaces to dry before setting.
   3. Wet joint surfaces thoroughly before applying mortar.

D. Tool exposed joints slightly concave when thumbprint hard, using a jointer larger than joint thickness unless otherwise indicated.

E. Cut joints flush for masonry walls to receive plaster or other direct-applied finishes (other than paint) unless otherwise indicated.

3.06 FLASHING

A. General: Install embedded flashing in masonry at lintels, ledges, other obstructions to downward flow of water in wall, and where indicated.

B. Install flashing as follows unless otherwise indicated:
   1. Prepare masonry surfaces so they are smooth and free from projections that could puncture flashing. Where flashing is within mortar joint, place through-wall flashing on sloping bed of mortar and cover with mortar. Before covering with mortar, seal penetrations in flashing with adhesive, sealant, or tape as recommended by flashing manufacturer.
   2. At lintels, extend flashing a minimum of 6 inches into masonry at each end. At heads and sills, extend flashing 6 inches at ends and turn up not less than 2 inches to form end dams.
   3. Install metal drip edges beneath flexible flashing at exterior face of wall. Stop flexible flashing ½-inch back from outside face of wall and adhere flexible flashing to top of metal drip edge.
   4. Install metal flashing termination beneath flexible flashing at exterior face of wall. Stop flexible flashing ½-inch back from outside face of wall and adhere flexible flashing to top of metal flashing termination.
   5. Cut flexible flashing off flush with face of wall after masonry wall construction is completed.

C. Install single-wythe CMU flashing system in bed joints of CMU walls where indicated to comply with manufacturer's written instructions. Install CMU cell pans with upturned edges located below face shells and webs of CMUs above and with weep spouts aligned with face of wall. Install CMU web covers so that they cover upturned edges of CMU cell pans at CMU webs and extend from face shell to face shell.

D. Install reglets and nailers for flashing and other related construction where they are shown to be built into masonry.

3.07 REINFORCED UNIT MASONRY INSTALLATION

A. Placing Reinforcement: Comply with requirements in ACI 530.1/ASCE 6/TMS 602.

B. Grouting: Do not place grout until entire height of masonry to be grouted has attained enough strength to resist grout pressure.
   1. Comply with requirements in ACI 530.1/ASCE 6/TMS 602 for cleanouts and for grout placement, including minimum grout space and maximum pour height.
   2. Limit height of vertical grout pours to not more than 60 inches.

3.08 FIELD QUALITY CONTROL

A. Testing and Inspecting: The OWNER will engage special inspectors to perform tests and inspections and prepare reports. Allow inspectors access to work areas, as needed to

perform tests and inspections. Retesting of materials that fail to meet specified requirements shall be done at Contractor's expense.

B. Inspections: Level 1 special inspections according to the "California Building Code."
   1. Begin masonry construction only after inspectors have verified proportions of site-prepared mortar.
   2. Place grout only after inspectors have verified compliance of grout spaces and of grades, sizes, and locations of reinforcement.
   3. Place grout only after inspectors have verified proportions of site-prepared grout.

C. Testing Prior to Construction: One set of tests.

D. Testing Frequency: One set of tests.

E. Concrete Masonry Unit Test: For each type of unit provided, according to ASTM C140 for compressive strength.

F. Mortar Aggregate Ratio Test (Proportion Specification): For each mix provided, according to ASTM C780.

G. Mortar Test (Property Specification): For each mix provided, according to ASTM C780. Test mortar for mortar air content and compressive strength.

H. Grout Test (Compressive Strength): For each mix provided, according to ASTM C1019.

I. Prism Test: For each type of construction provided, according to ASTM C1314 at 7 days and at 28 days.

3.09 REPAIRING, POINTING, AND CLEANING

A. Remove and replace masonry units that are loose, chipped, broken, stained, or otherwise damaged or that do not match adjoining units. Install new units to match adjoining units; install in fresh mortar, pointed to eliminate evidence of replacement.

B. Pointing: During the tooling of joints, enlarge voids and holes, except weep holes, and completely fill with mortar. Point up joints, including corners, openings, and adjacent construction, to provide a neat, uniform appearance. Prepare joints for sealant application, where indicated.

C. In-Progress Cleaning: Clean unit masonry as work progresses by dry brushing to remove mortar fins and smears before tooling joints.

D. Final Cleaning: After mortar is thoroughly set and cured, clean exposed masonry as follows:
   1. Remove large mortar particles by hand with wooden paddles and nonmetallic scrape hoes or chisels.
   2. Test cleaning methods on sample wall panel; leave one-half of panel uncleaned for comparison purposes. Obtain OWNER’s Representative’s approval of sample cleaning before proceeding with cleaning of masonry.
   3. Protect adjacent stone and non-masonry surfaces from contact with cleaner by covering them with liquid strippable masking agent or polyethylene film and waterproof masking tape.
   4. Clean concrete masonry by cleaning method indicated in NCMA TEK 8-2A applicable to type of stain on exposed surfaces.

3.10 MASONRY WASTE DISPOSAL

A. Salvageable Materials: Unless otherwise indicated, excess masonry materials are Contractor's property. At completion of unit masonry work, remove from Project site.

B. Excess Masonry Waste: Remove excess clean masonry waste that cannot be used as fill, as described above, and other masonry waste, and legally dispose of off OWNER'S property.

END OF SECTION

DIVISION 05
METALS

SECTION 05120 – STRUCTURAL STEEL

PART 1 – GENERAL

1.1 SUMMARY:

A. Section Includes:
   1. Structural steel framing.
   2. Steel pipe and tube framing.
   3. Shop priming and field touch-up to extent specified.

B. Related Work Specified Elsewhere:
   1. Setting of anchor bolts and inserts in concrete.
   2. Reinforcing steel.
   3. Fireproofing for structural steel.
   4. Field painting except as specified herein.
   6. Miscellaneous metal fabrications including steel stairs.

1.2 REFERENCES

A. California Building Code: Title 24 CCR, Chapter 22, Current Edition.

B. AISC Standards - Code of Standard Practice for Steel Buildings and Bridges; Specification for the Design, Fabrication and Erection of Structural Steel for Buildings; and Steel Construction Manual, LRFD Current Edition & ASD Current Edition.

C. AWS Standards - AWS D1.1, Structural Welding Code, 2004 Edition.

D. Structural Joint Reference Specification - The Specifications for Structural Joints Using ASTM A325 or ASTM A490 Bolts established by the Research Council On Structural Connections of the Engineering Foundation, hereinafter referred to as "Ref Spec", Current Edition.

E. AISC – Code of Standard Practice for Steel Buildings and Bridges.

F. AISC – Design, Fabrication, and Erection of Structural Steel for Buildings.

G. AISC – Manual of Steel Construction. LRFD 3rd Edition, ASD 9th Edition.

H. AISC – Structural Joints Using ASTM A325 or A490 Bolts.

I. ANSI B18.22.1 – Plain Washers

J. ASTM A6 – General Requirements for Rolled Structural Steel Bars, Plates, Shapes, and Sheet piling.

K. ASTM A36 – Structural Steel.

L. ASTM A53 – Pipe, Steel, Black, and Hot-Dipped, Zinc-Coated, Welded and Seamless.

M. ASTM A108 – Steel Bars, Carbon, Cold-Finished, Standard Quality.

N. ASTM A307 – Carbon Steel Bolts and Studs, 60,000psi Tensile Strength.

O. ASTM A325 – Structural Bolts, Steel, Heat Treated, 120/105 ksi Minimum Tensile Strength.

P. ASTM A449 – Quenched and Tempered Steel Bolts and Studs.

Q. ASTM A490 – Heat Treated Steel Structural Bolts, 150 ksi Minimum Tensile Strength.

R. ASTM A500 – Cold-Formed Welded and Seamless Carbon Steel Structural Tubing in Rounds and Shapes.

S. ASTM A563 – Carbon and Alloy Steel Nuts.

T. ASTM A572 – High Strength Low-Alloy Columbiam-Vanadium Structural Steel.

U. ASTM A668 – Steel Forgings, Carbon and Alloy, for General Industrial Use.

V. ASTM A675 – Steel Bars, Carbon, Hot-Wrought, Special Quality, Mechanical Properties.

W. ASTM A992 – Steel for Structural Shapes for Use in Building Framing (Including Supplemental Requirements).

X. ASTM E94 – Standard Guide for Radiographic Testing.

Y. ASTM E142 – Controlling Quality of Radiographic Testing.

Z. ASTM E165 – Liquid Penetrant Examination.

AA. ASTM E709 – Standard Guide for Magnetic Particle Examination.

BB. ASTM F436 – Hardened Steel Washers.

CC. ASTM F959 – Compressible Washer-Type Direct Tension Indicators for use with Structural Fasteners.

DD. ASTM F1554 – Anchor Bolts, Steel, 36, 55, and 105-ksi Yield Strength.

EE. ASTM F1852 – Twist-Off Type Tension Control Structural Bolt/Nut/Washer Assemblies, Steel, Heat Treated, 120/105 ksi Minimum Tensile Strength.

FF. AWS A2.4 – Symbols for Welding and Nondestructive Examination.

GG. AWS D5.4 – Recommended Practices for Stud Welding.

HH. IFI 136 – Studs and Bent Bolts.

II. SSPC SP1 – Solvent Cleaning.

JJ. SSPC SP2 – Hand Tool Cleaning.

KK. SSPC SP3 – Power Tool Cleaning.

1.3 SUBMITTALS:

A. Comply with all pertinent provisions of Division 1.

B. Product Data: Submit copies of producer's or manufacturer's data and installation instructions. Include laboratory test reports and other data required to show compliance with these specifications:

1. Structural steel, including certified copies of mill test reports covering chemical and physical properties. Charpy v-notch requirements shall apply to the following Seismic Force Resisting System (SFRS) materials: Plate = or > than 1-1/2", Group 3 rolled sections with flanges = or > than 1-1/2", and Group 4 and 5 rolled sections.
2. High strength bolts including nuts and washers.
3. Unfinished bolts and nuts.
4. Non-shrink grout.
5. Load indicating washers.
6. Structural steel primer paint.
7. Welding Filler Materials.
8. Studs.

C. Shop Drawings: Submit shop drawings including plans, elevations, sections and details covering all structural steel including welding, accessories, and fastenings. Fully detail all connections and fastenings not shown or specified to meet required conditions. Include

detailed sequence plan for shop and field welding that minimizes locked-in stresses and distortion. Where possible, shop drawings to be coordinated with all other disciplines.

D. Erection and Bracing Plan: Submit an erection and bracing plan in accordance with Section 1.4.E below.

1.4 QUALITY ASSURANCE:

A. Reference Standards:
   1. California Building Code: Title 24 CCR, Chapter 22, 2022 Edition.
   2. AISC Standards: Code of Standard Practice for Steel Buildings and Bridges: Specification for the Design, Fabrication and Erection of Structural Steel for Buildings; and Steel Construction Manual, Allowable Stress Design, Current Edition; Manual of Steel Construction, Load & Resistance Factor Design, Current Edition.
   3. AWS Standards: AWS D1.1, Structural Welding Code, Current Edition.
   4. Structural Joint Reference Specification - The Specifications for Structural Joints Using ASTM A325 or ASTM A490 Bolts established by the Research Council on Structural Connections of the Engineering Foundation, hereinafter referred to as “Ref Spec”, Current Edition.

B. Qualifications of Fabricator: Fabricate structural steel in shop of a licensed fabricator, AISC certified, in the same category of the scope of this project

C. Requirements of Regulatory Agencies: Work of this Section shall conform to Title 8 CCR and to Subparagraph 1.2.A above.

D. Source Quality Control: Refer to Division 1. Independent Testing Laboratory shall perform conformance testing in accordance with Title 24 CCR, 2231A.1.
   1. Testing:
      a. The Owner’s selected testing laboratory will pick up specimens and make required tests as required.
   2. Test specimens:
      a. Mill order shall be placed with specified steel properties. Independent testing lab shall audit steel mill for proper testing practice.
      b. Each specimen shall be machined by the Owner’s selected testing laboratory to dimensions required by ASTM A370.
      c. In determining the specified Yield Point, if the stress-strain curve doesn’t exhibit a distinct Yield Point, then report the Yield Strength in lieu of a Yield Point using the 0.2% offset method or the 0.5% extension under load method.
         Exception:
         For structural steel built-up members and plates thicker than 1-1/2", the 0.5% extension under load method will not be accepted.
   3. Identified Structural Steel:
      a. All steel members that can be identified by heat number and accompanied by mill analysis and test reports showing compliance with the contract documents will not require secondary testing.
   4. Unidentified Structural Steel: Steel not identified and certified as specified above shall be tested according to following requirements. Structural steel fabricator shall cut samples under direction of the Special Inspector and Testing Laboratory shall machine or otherwise prepare the specimens and perform testing of each 5 tons or fraction thereof for each size of unidentified steel except, in the case of random pieces or of steel having Fy greater than 36Ksi, testing of each piece is required. Tests required are:
      a. For pipe, one tension and elongation test and one flattening test for each size.
      b. For all other steel, one tension and elongation test and one bend test for each size.

c. Contractor shall reimburse to Owner all costs paid by Owner for testing unidentified steel.

5. Testing of High Strength Bolts, Nuts, and Washers: According to Title 24, Chapter 22A Section 2231A.
6. Testing of End-Welded Studs.
7. ITL shall perform ultrasonic lamination checks on the flanges of SFRS columns with complete penetration weld connections (i.e. drag connections).

E. Erection and Bracing Plan and Procedure: Refer to Section 1710, Title 8, CCR, and Building Code. Employ and pay a California registered civil engineer to prepare an erection and bracing plan and erection procedure for structural steel including columns, beams, and girders, who shall be solely responsible for its compliance. Follow the plan and procedure exactly. Keep a copy at the job site as required by California Division of Industrial Safety. File two copies of stamped erection and bracing plan and procedure for record purposes only, not for review or approval.

1.5 PRODUCT DELIVERY AND HANDLING:

A. Comply with all pertinent provisions of Division 1.

B. Delivery and Handling: Protect all materials from damage during shipping, handling and storage on the site. Steel showing dents, creases, deformations, weathering, or other defects is not acceptable.

1.6 PROJECT SITE CONDITIONS:

A. Site Measurements: Take field measurements as required. Report any major discrepancy between Drawings and field dimensions.

B. Protection of Floors: Use caution to protect floor slab and adjacent Work from damage. Do not overload floors. Use rubber tired equipment to handle and move steel. Do not place steel members directly on floor; use pads of timber or like material for cushioning.

C. Temporary Flooring: Provide necessary temporary planking, scaffolding, and flooring for erection of structural steel or support of erection machinery. Confirm use of temporary floors or steel decking to Code.

D. Connection of Steel Decking Temporary Flooring: Temporarily weld steel decking to supports if used as a working platform. Distribute concentrated loadings from welding machines and other heavy machinery with planking or equal. Replace decking damaged by use as a working platform at no additional contract cost.

PART 2 – PRODUCTS

2.1 BASIC MATERIALS: Furnish materials conforming to the following:

A. Steel shapes: ASTM A36, A992, and A572-GR50, as noted on drawings.

B. Steel plates: ASTM A36 and A572-GR50 as noted on drawings. For plates thicker than 4", use ASTM A572-GR42.

C. Steel tubing: ASTM A500, Grade B, Fy = 46 ksi.

D. Steel pipe: ASTM A120 standard weight for general use; ASTM A53 Grade B where used for structural purposes.

E. Bolts and nuts: ASTM A307.

F. High-strength bolts, nuts, and washers: Chapter 22A, ASTM A325 or ASTM A490 as indicated for the bolts, ASTM A563 Grade C for nuts, and ASTM F436 for carburized washers. All high-strength bolts shall have a suitable identifying mark placed on top of bolt head at the factory. Refer to drawings for bolt specification requirements.

G. High-strength countersunk screws: ASTM F835, all high-strength countersunk screws shall be identified per the ASTM standard.

H. Anchor Bolts: ASTM A307, non-headed type or A449 or A354 BD Bolts as specified per contract documents.

I. Electrodes: AWS D1.1, E70XX, E70TXXXX, E71TXXXX, and E80XX Series Low Hydrogen Electrodes as required for intended use. All electrodes shall have a minimum Notch -Toughness of 20 FT-Lb at -20°F.

J. Galvanizing: Where indicated on Drawings, shall be by the hot dipped process after fabrication. Conform to ASTM A123, with average weight per square foot of 2.0 ounces and not less than 1.8 ounces per square foot. All exterior steel to remain exposed, shall be galvanized unless otherwise indicated.

K. Primer: Use types acceptable to governing air quality management officials.
   1. For above-grade locations: Tnemec 10-99, ICI, or equal, formulated for exterior exposure for extended periods up to one year.
   2. For below grade applications: Coal-tar epoxy coating, two coats, 5 mils per coat. Perma Bar, as manufactured by Karlee Co., Burbank, CA, or equal. Touch-up on job site with Perma-Bar coal-tar epoxy, match finish coat thickness.

L. Non-shrink grout: Master Builders "Embeco 636", or equal, non-gas-forming, free of oxidizing catalysts and inorganic accelerators, performance and characteristics when mixed to a fluid consistency meeting CRD-C 79 and CRD-C 588, non-staining type in exposed areas.

2.2 GENERAL FABRICATION REQUIREMENTS: According to the approved submittals, Reference Standards as applicable, and requirements herein. Fabricate and form the Work to meet actual installation conditions verified at the site.

A. Structural steel members shall be delivered to site in accordance with straightness and appearance requirements noted in the AISC Code of Standard Practice.

B. Contact: Pin components parts of built-up members and maintain in close contact using clamps or temporary bolting during welding operations. Accurately mill compression bearing surfaces of joints depending on contact bearings or saw cut square to axis, or as detailed. Cut other joints straight and true.

C. Joining: Provide members of the sizes, weights, shapes, and arrangements indicated, closely fitted, and finished true to line and in precise position as necessary to allow proper joining of parts in the field. Drifting to enlarge unfair holes is not allowed without prior approval.

D. Drilling, Punching, and Reaming: Hole burning to make or enlarge previous holes is allowed only with prior approval. Precisely locate finished holes to ensure passage of all bolts through steel assemblies without drifting. Enlarge holes only by reaming. Poor matching of holes is cause for rejection.

E. Holes For Anchor Bolts: Punch and drill or ream holes in base and bearing plates. Do not make or enlarge the holes by burning except for grouting holes in column bases without prior approval by the Owners Representative.

2.3 CONNECTIONS:

A. Make connections with bolts as noted on the Structural Drawings.

B. High-Strength Steel Bolting: For joints connected by high strength steel bolts, hardened washers, and nuts tightened to high tension, conform materials, method of installation and tension control, and wrenches to Reference Standards and Title 24 Chapter 22A. Install all high-strength bolts under inspection required by Title 24 CCR, 2231A.6.

1. Connections shall be the “bearing bolt type” with threads excluded from the shear planes (A325-X) unless noted to be “friction type” or “slip-critical” (A325-SC and A490-SC). Refer to drawings.
2. Tightening of nuts shall be done with properly calibrated wrenches or by the turn-of-the-nut method for A325-SC and A490-SC bolts. Tightening of the nuts for A325-X bolts to snug tightness shall be to Ref. Spec. Allowable bolt stresses shall conform to Title 24, CCR Chapter 22A Division II or III and referenced standards.
3. Check calibrated wrenches individually for accuracy not less than once daily for actual conditions of application.
4. Clean all contact surfaces of bolted parts and threads free of scale, slag, burrs, pits, dirt, paint, and other foreign material or defects which would prevent solid seating of connected parts.
5. Install hardened washers per AISC Standards.
6. Tighten bolts systematically from most rigid part of connection to the free edges.
7. Retighten first installed bolts that may have loosened by tightening of subsequent bolts so all bolts are tightened to correct tension.
8. Mark fully tightened bolts with identifying symbol.
9. The ITL shall torque test 25% of the bolts in connections designated with A325-SC or A490-SC Bolts.

C. Welded Stud Connectors.

D. Load Indicator Washers: As manufactured and licensed by Cooper and Turner, Bethlehem Steel, or approved equal, may be used for the field installation of the high-strength bolts. Load indicator washers may not be substituted for any required washer, but may be used in conjunction with the required washers. Conform tightening to Paragraph 5e of the Reference Spec listed under Section 1.2 . After sufficient bolts in a joint are snugged to bring the members into close contact, tightening shall progress from the most rigid part to the free edges until the load indicators on all bolts are closed to the required gap of 0.015" under bolt heads or 0.010" under the nuts. Do not completely close the gap to prevent overtightening and damage to the bolts. Conform to ASTM F959, A325 and A490.

E. Tension Set or Load Indicator Bolts, Nuts, and Washers: As manufactured by Cold Form Specialties, Bethlehem Steel, or approved equal, may be used for field installation of the high-strength bolts. In multi-bolt joints, the nuts shall be tightened in stages (a little at a time) without breaking the spline in any of them until the final stage, to minimize slackening of the installed bolts.

2.4 WELDING:

A. Conform to CBC 2231.5, AWS D1.1 as modified by referenced AISC Standards, and as indicated or noted on Drawings. Employ welding operators qualified in accordance with AWS D1.1, for the position and process required. Weld all structural steel joints in accordance with the approved welding procedure specifications.

B. Storage and Care of Electrodes: Coatings of low-hydrogen type SMAW electrodes shall be thoroughly dry as used. Conform to AWS D1.1; use electrodes as taken from hermetically sealed packages within time limit specified therein after package is opened. SMAW Electrodes not used within allowable time period and electrodes that have been exposed more than one hour to air having a relative humidity of 75% or greater, or as required by the manufacturer, shall be dried according to AWS D1.1 before they are used, or shall be reconditioned according to electrode manufacturer's recommendations. Electrodes so dried or reconditioned not used within allowable time period after drying is completed shall be redried before use. Electrodes of any class that have been wet shall not be used under any conditions.

C. Preparation: Clean steel surfaces to be welded of all paint, grease, oil, mill scale, and foreign matter. Clean weld each time the electrode is changed. Chip full surface of hand guided and controlled flame cut edges before welding. Surfaces prepared with automatic or mechanically guided and controlled equipment need not be ground or chipped before welding.

D. Weld Finishing: Grind exposed welds subject to contact to smooth surfaces free of holes, slag, or other defects, flush with the adjoining surfaces. No finish treatment is required for permanently concealed welds and other exposed welds.

E. Procedures: During assembling and welding, hold components of a built-up member with adequate clamps or other means to keep parts straight and in close contact. Do no welding in wind until adequate protective screening is set up. Cut out defective welds or parts of welds with a chisel or air arc and replace.

F. Weld Characteristics: Conform to AWS D1.1, Chapter 8, Statically Loaded Structures. Visual inspection of finished welds must show compliance with AWS D1.1 as it relates to fusion, undercuts, reinforcement, and porosity.

2.5 SHOP PRIMING:

A. Clean surfaces according to AWS D1.1 and SSPC Specifications. Apply one shop coat of specified metal primer to minimum 1.0 mil dry film thickness. Work primer into joints. Do not prime the following:
   1. Steel surfaces embedded in concrete or masonry with the exception of those steel surfaces that support anchored brick veneer.
   2. Permanently concealed structural steel surfaces.
   3. Contact surfaces of high-strength bolted connections.
   4. Surfaces to receive directly adhered fireproofing.
   5. Surfaces to be welded.
   6. Top surface of beams to receive the metal deck.

PART 3 – EXECUTION

3.1 ERECTION OF STRUCTURAL STEEL:

A. Brace and secure structural steel members until permanent connections are completed. Provide accessories and fasteners to secure steel in place as shown and required. Conform to Title 24, AISC Standards, and erection and bracing plan and procedure.

B. Employ qualified riggers and plan erection to require minimum cutting. Erect members plumb, true to line and level, and in precise positions. Provide temporary bracing and guying to resist loads and stresses to which the structure may be subjected, including those due to erection equipment and its operation.

C. Damaged Members: During erection, straighten or replace members which are bent, twisted, or damaged as directed. If heating is required, perform heating by methods that ensure a uniform temperature throughout the entire member. When directed, remove members damaged to an extent impairing appearance, strength, or serviceability and replace with new members at no extra cost to the Owner.

D. Anchor Bolts: Furnish and deliver anchor bolts with setting drawings and templates. Verify position of bolts prior to delivery of steel; report errors or deviation for correction.

E. Steel Columns: Set column bases in proper position for alignment, plumb and straight, supported on adjustable bolt supports or shims until grout has set. Set center of base true to column center within 1/16" and adjust column to proper height. Maintain bases at proper position and level during grouting. Fill grout space solid with non-shrink grout.

F. Connections: Hold steel in correct position during welding and bolting, and provide for dead loads, wind, and all erection stresses. Do no welding or final bolting until members have been aligned and plumbed.
   1. Field Welding: Conform to requirements of Specification Section 05120, Section 2.4.
   2. Common Bolts: Tighten and upset bolt threads to preclude loosening, or use approved self-locking nuts.
   3. High-Strength Bolting: Tighten by turn of the nut method or with calibrated torque wrenches as specified for the shop high-strength bolting and according to Code, AISC Standards and the Reference Standard.

G. Temporary shoring and bracing:
   1. Provide temporary shoring and bracing members with connections of sufficient strength to bear imposed loads.
   2. Provide temporary guy lines to achieve proper alignments of the structure as erection proceeds.
   3. Remove temporary connections and members when permanent members are in place and the final connections have been made.

H. Tolerances: Erect members to the tolerances conforming to referenced AISC Standards and UBC.

3.2 FIELD TOUCH-UP PAINTING:

After structural steel erection and connections are completed and approved, clean all connections to be painted and damage to shop painted surfaces, and apply a field touch-up coat of same metal primer used for shop coat.

3.3 FIELD QUALITY CONTROL:

A. Comply with all pertinent provisions of Division 1.

B. Inspection of Shop Fabrication: Required for structural steel according to Title 24 CCR, 2231A.4.

C. Inspection of High Strength Bolt Installation: Required for both shop and field installation according to Title 24 CCR, 2231A.6.

D. Erection Inspection: Inspector shall inspect all erection including the grouting under base plates.

E. Inspection of welding – shop and field according to CBC 2231A.5.

3.4 CORRECTIONS:

A. Correct deficiencies in structural steel work which inspections and test reports indicate to be not in compliance with the specified requirements.

B. Perform additional tests required to reconfirm noncompliance of the original work and to show compliance of corrected work, all at no additional cost to the Owner.

END OF SECTION

DIVISION 06

WOOD & PLASTICS

SECTION 06100 – ROUGH CARPENTRY

PART 1 – GENERAL

1.1 DESCRIPTION OF WORK

A. Work Included: Provide labor, materials, and equipment necessary to complete the work of this Section, including but not limited to the following:
   1. Wood blocking, cants, and nailers.

1.2 SUBMITTALS

A. Product Data: For each type of process and factory-fabricated product. Indicate component materials and dimensions and include construction and application details.

1.3 DELIVERY, STORAGE, AND HANDLING

A. Stack lumber, plywood, and other panels; place spacers between each bundle to provide air circulation. Provide for air circulation around stacks and under coverings.

PART 2 – PRODUCTS

2.1 WOOD PRODUCTS, GENERAL

A. Lumber: DOC PS 20 and applicable rules of lumber grading agencies certified by the American Lumber Standards Committee Board of Review.
   1. Factory mark each piece of lumber with grade stamp of grading agency.
   2. Where nominal sizes are indicated, provide actual sizes required by DOC PS 20 for moisture content specified. Where actual sizes are indicated, they are minimum dressed sizes for dry lumber.
   3. Provide dressed lumber, S4S, unless otherwise indicated.
   4. Provide dry lumber with 15 percent maximum moisture content at time of dressing for 2-inch nominal thickness or less, unless otherwise indicated.

B. Plywood Panels:
   1. Plywood: Either DOC PS 1 or DOC PS 2, unless otherwise indicated.
   2. Thickness: As needed to comply with requirements specified but not less than thickness indicated.
   3. Factory mark panels according to indicated standard.

2.2 MISCELLANEOUS LUMBER

A. General: Provide lumber for support or attachment of other construction, including the following:
   1. Blocking
   2. Nailers

B. For items of dimension lumber size, provide Construction, Stud, or No. 2 grade lumber with 15 percent moisture content.

2.3 FASTENERS

A. General: Provide fasteners of size and type indicated that comply with requirements specified in this Article for material and manufacture.
   1. Where carpentry is exposed to weather, in ground contact, or in area of high relative humidity, provide fasteners with hot-dip zinc coating complying with ASTM A 153/A 153M.

B. Nails, Wire, Brads, and Staples: FS FF-N-105.

C. Power-Driven Fasteners: CABO NER-272.

D. Wood Screws: ASME B18.6.1.

E. Bolts: Steel bolts complying with ASTM A307, Grade A with ASTM A563 hex nuts and, where indicated, flat washers.

PART 3 – EXECUTION

3.1 INSTALLATION, GENERAL

A. Discard units of material with defects that impair quality of carpentry and that are too small to use with minimum number of joints or optimum joint arrangement.

B. Set carpentry to required levels and lines, with members plumb, true to line, cut, and fitted. Fit carpentry to other construction; scribe and cope as needed for accurate fit. Locate furring, nailers, blocking, grounds, and similar supports to comply with requirements for attaching other construction.

C. Securely attach carpentry work as indicated and according to applicable codes and recognized standards.

D. Countersink fastener heads on exposed carpentry work and fill holes with wood filler.

E. Use fasteners of appropriate type and length. Predrill members when necessary to avoid splitting wood.

F. Cutting and Repairing: Do such work as normally required and done for mechanical and other trades.

G. Blocking: Furnish and install blocking, furring, brackets, etc., as required to properly carry out all work shown and reasonably inferred by the Drawings and Specifications.

H. Nailers and Wood Cants: Nailers, 2” stock unless otherwise noted, of the proper widths. Bevel nailers for concrete ½” both sides and properly place in forms. Bolt nailers in place on steel or masonry. Furnish ledgers bolted to wall in locations shown and as required.

3.2 WOOD BLOCKING, AND NAILER INSTALLATION

A. Install where indicated and where required for attaching other work. Form to shapes indicated and cut as required for true line and level of attached work. Coordinate locations with other work involved.

B. Attach items to substrates to support applied loading. Recess bolts and nuts flush with surfaces, unless otherwise indicated.

END OF SECTION

DIVISION 07

THERMAL & MOISTURE PROTECTION

SECTION 07150 – SELF-ADHERING SHEET WATERPROOFING

PART 1 – GENERAL

1.1 SECTION INCLUDES

A. Self-Adhering applied elastomeric sheet membrane waterproofing.

B. Composite drainage panels.

C. Application to vertical and horizontal surfaces occupied spaces and where indicated.

1.2 REFERENCE STANDARDS

A. Conform to current adopted reference standards by date of issue of the current code cycle and the date of the Contract Documents.

B. ASTM D412 - Rubber Properties in Tension.

C. ASTM E154 - Water Vapor Retarders Used in Contact with Earth under Concrete Slabs, on Walls, or as Ground Cover.

D. ASTM D570 - Water Absorption of Plastics.

E. AQMD - Local Air Quality Management District Regulations.

1.3 SUBMITTALS

A. Product data for sealing openings, projections, holes, slots, sleeves, and corners.

B. Manufacturer's installation instructions.

1.4 QUALITY ASSURANCE

A. Qualifications
   1. Membrane Manufacturer: Company specializing in waterproofing sheet membranes with five years' experience.
   2. Applicator: Company specializing in application of specified waterproofing with five years' experience.

B. Mock-Up
   1. Provide mock-up of installed membrane.
   2. Mock-up to represent conditions of finished work including internal and external corners, seam jointing, attachment method, sealing and counterflashing cover, control, and expansion joints.
   3. Approved sample may be incorporated as part of the work.

C. Pre-construction Conference
   1. Convene two weeks before installation.
   2. Who Should Attend:
      a. Contractor's Representative
      b. Architect's Representative
      c. Owner's Representative
      d. Manufacturer's Representative
      e. Sub-Contractor/Installer.
   3. Inspection before backfilling.

1.5 ENVIRONMENTAL REQUIREMENTS

A. Do not apply waterproofing during inclement weather or when air temperature is below 50°F.

B. Do not store materials where temperature exceeds 90°F.

C. Do not store or apply liquid material in unventilated spaces.

D. Do not employ products that do not comply with AQMD, Local Regulations. Chlorinated primer, solvent-based primers or asphalt emulsion not permitted.

1.6 WARRANTY

A. Special Warranty (Extended Warranty): Manufacturer agrees to repair or replace waterproofing material that does not comply with requirements or that fails to remain watertight within specified warranty period.
   1. Warranty does not include failure of waterproofing due to failure of substrate prepared and treated according to requirements or formation of new joints and cracks in substrate exceeding 1/16" in width.
   2. Include coverage of materials and installation and resultant damage from failure of installation to resist penetration of moisture.
   3. Warranty Period: 5 years from date of Certified Completion.

B. Special Installer's Warranty (Extended Warranty): Specified form, signed by installer, covering Work of this Section, for Warranty period of 2 years.
   1. Warranty includes removing and reinstalling protection board, drainage panels.

PART 2 – PRODUCTS

2.1 MANUFACTURERS

A. Products of following manufacturers form basis for design and quality intended.
   1. W.R. Grace and Co., Cambridge, MA. Product: Bituthene 4000 with Surface Conditioner
   2. W.R. Meadows, Inc., Hampshire, IL. Product: Mel-Rol.
   3. Carlisle Coatings and Waterproofing Inc., South Sapulpa, OK. Product: CC-705 CCW/ MiraDRI 860 and MiraDRAIN 6000/6200.
   4. Polyguard Products, Inc., Ennis, TX. Product: Polyguard 650.
   5. IKO, Wilmington, DE; Product: Aquabarrier FP.
   6. TREMCO
   7. Or ENGINEER-approved equal .

2.2 MEMBRANE MATERIALS

A. Membrane: Heavy Duty Composite Sheet, minimum of 60 mils thick, consisting of one layer of polymeric 56 mils thick and one layer of woven polypropylene film, covered with release paper, self-adhesive, conforming to the following properties:

Properties	**Test**	**Results**
Tensile Strength	ASTM D412	325 psi min.
Elongation	ASTM D412	300 percent min.
Puncture Resistance	ASTM E154	50 pounds. min.
Hydrostatic Head Resistance		231 feet water min.
Water Absorption	ASTM D570	0.1 percent max.

B. Seaming: Self-adhering.

2.3 ADHESIVE MATERIALS

A. Surface Conditioner: Water based, VOC compliant as recommended by manufacturer.

B. Mastic: Grace LM2, or ENGINEER-approved equal.

C. Liquid Membrane Patch: Two component elastomeric.

D. Adhesive tape: Bitustik tape.

E. Stripping (flashing) Materials: manufacturer's products for corner and edge details.

F. Primer: as recommended by manufacturer for product specified.

2.4 ACCESSORIES

A. Composite Drainage Panels for Vertical Walls:
   1. HYDRODUCT 220, by Grace Construction Products, with non-woven polypropylene filter fabric,
   2. MIRADRAIN 6200 by CCW/MiraDRI, Mel-Drain 5035-B by W.R. Meadows,
   3. Or ENGINEER-approved equal

B. Sealant and backing material: One component polyurethane and closed-cell polyethylene foam rod in accordance with these Specifications.

PART 3 – EXECUTION

3.1 INSPECTION

A. Verify items that penetrate surfaces to receive waterproofing are rigidly installed.

B. Verify surfaces are smooth free of cracks, depressions, waves, or projections that may be detrimental to successful installation.

C. Do not apply waterproofing to damp, frozen, dirty, or dusty surfaces.

D. Beginning of installation means acceptance of existing surfaces.

3.2 PREPARATION

A. Protect adjacent surfaces not designated to receive waterproofing.

3.3 INSTALLATION

A. Install membrane waterproofing in accordance with manufacturer's instructions.

B. Roll out membrane. Minimize wrinkles and bubbles.

C. Apply surface conditioner at rate recommended by manufacturer, and with spray or roller equipment as required.

D. Remove release paper layer. Roll out on to surface with mechanical roller to encourage full contact bond. Start at bottom, minimize bubbles.

E. Overlap edges and ends minimum 2-1/2 inches. Stagger end laps. Roll on membrane firmly. Patch mis-aligned seams with multiple layers. Seal patched edges with the specified mastic.

F. Shingle joints in direction of drainage. Apply liquid membrane at minimum 90 mil thickness at inside corners and double layers at outside corners.

G. Seal to adjoining surfaces.

H. Continue membrane up vertical surfaces minimum 6 inches above finish grade unless otherwise noted.

I. Seal items penetrating membrane with double layers of membrane material, or apply the specified liquid membrane patch, overlapping the sheet membrane minimum 2 inches.

J. Install flashings where indicated. Seal watertight to membrane. Apply troweled bead of specified mastic to all vertical and horizontal terminations.

K. Reinforce membrane with multiple thickness of membrane material over joints, whether joints are static or moving.

3.4 PROTECTION

A. Protect finished installation.

B. Vertical Surfaces:
   1. Apply drainage panels with filter fabric facing backfill.

C. After installation, close off area to prevent unauthorized traffic.

D. Do not permit foot or vehicular traffic on unprotected membrane.

E. Protect waterproofing from damage and wear during remainder of construction period.

F. Protect installed drainage panels from damage due to ultraviolet light, harmful weather exposures, physical abuse, and other causes. Provide temporary coverings where insulation will be subject to abuse and cannot be concealed and protected by permanent construction immediately after installation.

G. Clean spillage and soiling from adjacent construction using cleaning agents and procedures recommended by manufacturer of affected construction.

END OF SECTION

SECTION 07411 – PREFORMED WALL PANELS

PART 1 – GENERAL

1.1 SECTION INCLUDES

The work includes, but is not necessarily limited to, furnishing and installation of all preformed metal roofing and walls, and accessories as indicated on the drawings and specified herein.

1.2 SUBMITTALS

A. PRODUCT DATA
1. Submit Manufacturer's technical product data, installation instructions and recommendations for each type of roofing and wall panel required. Include data substantiating those materials comply with requirements.

B. SAMPLES
1. Prior to ordering products, submit Manufacturer's standard color Samples for Architect's/Engineer's selection.
2. Prior to starting work, submit (quantity) 12" long Panel Samples showing shape and a representative color chip for Architect's/Engineer's acceptance.

C. SHOP DRAWINGS
1. Show panel layout, trim installation, and panel attachment.

D. SITE CONDITIONS
1. Provide completed site condition form for the specified finish to suit project condition

1.3 QUALITY ASSURANCE

A. INSTALLER'S QUALIFICATIONS
1. Installation of panels and accessories by installers with a minimum of 5 years' experience on panel projects of this nature.

B. MANUFACTURER'S QUALIFICATIONS
1. Manufacturer shall have a minimum of 10 years' experience supplying metal roofing/siding to the region where the work is to be done.
2. Manufacturer shall provide proof of $2,000,000 liability insurance for their metal roof system and comply with current independent testing and certification as specified. See specific product literature for testing information.
3. Panel manufacturers without full supporting literature, Flashings & Details Guides, Guide Specifications and Technical Support shall not be considered equal to the specified product.

C. REGULATORY AGENCY REQUIREMENTS
1. Comply with UBC and local Building Code requirements if more restrictive than those specified herein.

1.4 PRODUCT DELIVERY, STORAGE AND HANDLING

A. Protect against damage and discoloration

B. Handle panels with non-marring slings.

C. Do not bend panels.

D. Store panels above ground, with one end elevated for drainage.

E. Protect panels against standing water and condensation between adjacent surfaces.

F. If panels become wet, immediately separate sheets, wipe dry with clean cloth, and allow to air dry.

G. Remove any strippable film coating prior to installation and do not allow it to remain on the panels in extreme cold, heat or in direct sunlight.

1.5 WARRANTY

A. MANUFACTURER'S PRODUCT WARRANTY
   1. Manufacturer's standard coating performance warranty, as available for specified installation and environmental conditions. (Contact an AEP Span representative to determine actual warranty criteria.)

B. CONTRACTOR'S WARRANTY
   1. Warrant panels, flashings, sealants, fasteners, and accessories against defective materials and/or workmanship, to remain watertight and weatherproof with normal usage for two (2) years following Project Substantial Completion date.

PART 2 – PRODUCTS

2.1 ACCEPTABLE MANUFACTURER

A. AEP Span, A Division of ASC Profiles Inc, 2110 Enterprise Boulevard, West Sacramento, Calif 95691 800-733-4955
   Fontana: 10905 Beech Avenue, Fontana, California 92337
   Tacoma: 2141 Milwaukee Way, Tacoma, Washington 98421

B. PANEL DESIGNATION:
   1. Box Rib Wall. Net coverage 36", rib depth 1-1/2" @ 7-13/64" o.c.

2.2 MATERIALS

A. PANELS
   1. Base Metal:
      a. Material:
         1) Steel conforming to ASTM A792 Zincalume®/Galvalume®,minimum yield 50,000 psi, thickness [choose one] 24 gauge (standard), 22, 20, or 18 gauge (non-standard).
         2) [For primers thicker than 0.5 mil or if gauge is 20 or 18] Steel conforming to ASTM A653 (formerly ASTM A446), G-90 Galvanized, minimum yield 40,000 psi, thickness [choose one] 24 gauge (standard), 22, 20, or 18 gauge (non-standard).
      b. Protective Coating:
         1) Conform to ASTM A792, AZ50 (Zincalume®/Galvalume®).
         2) [For primers thicker than 0.5 mil] Conform to ASTM A924 (formerly ASTM A525) G-90 Galvanized.
   2. Exterior Finish:
      a. DuraTech® 5000 (Polyvinylidine Fluoride), full 70% Kynar® 500/Hylar 5000® consisting of a baked-on 0.15-0.20 mil corrosion resistant primer and a baked-on 0.70-0.80 mil finish coat with a specular gloss of 10-30% when tested in accordance with ASTM D-523- 89 at 60°.
   3. Interior Finish:
      a. Primer Coat Material: Corrosion-resistant primer; primer coat dry film thickness: 0.15 mils; finish coat material: polyester paint, finish coat dry film thickness: 0.35 mils.
      b. Color: Off-White to Light Gray
   4. Color:
      a. Custom color as selected by Architect.

B. FABRICATION
1. Unless otherwise shown on drawings or specified herein, panels shall be full length. Fabricate flashings and accessories in longest practical lengths.
2. Roofing panels shall be factory formed. Field formed panels are not acceptable.

PART 3 – EXECUTION

3.1 EXAMINATION

A. EXISTING CONDITIONS
1. Inspect installed work of other trades and verify that such work is complete to a point where this work may continue.
2. Verify that installation may be made in accordance with approved shop drawings and manufacturer's instructions.

3.2 PREPARATION

A. FIELD MEASUREMENTS
1. Verify prior to fabrication.
2. If field measurements differ from drawing dimensions, notify Architect/Engineer prior to fabrication.

B. PROTECTION
1. Treat, or isolate with protective material, and contacting surfaces of dissimilar materials to prevent electrolytic corrosion.
2. Require workmen who will be walking on Roofing Panels to wear clean, soft-soled work shoes that will not pick up stones or other abrasive material, which could cause damage or discoloration.
3. Protect work of other trades against damage and discoloration.

C. SURFACE PREPARATION
1. Clean and dry surfaces prior to applying sealant.

3.3 INSTALLATION

A. PANELS
1. Follow roof panel manufacturer's directions.
2. Install panel seams horizontally.
3. Lap panels away from prevailing wind direction.
4. Do not stretch or compress panel side-laps.
5. Secure panels without warp or deflection.

B. ALLOWABLE ERECTION TOLERANCE
1. Maximum Alignment Variation: 1/4 inch in 40 feet.

C. FLASHING
1. Follow manufacturer's directions and architect approved Shop Drawings.
2. Overlap roof panels at least 6 inches.
3. Install flashings to allow for thermal movement.
4. Remove strippable protective film, if used, immediately preceding flashing installation.

D. CUTTING AND FITTING
1. Neat, square, and true. Torch cutting is prohibited where cut is exposed to final view.
2. Openings 6 inches and larger in any direction: Shop fabricate and reinforce to maintain original load capacity.
3. Where necessary to saw-cut panels, debur cut edges.

3.4 CLEAN UP AND CLOSE OUT

A. PANEL DAMAGE AND FINISH SCRATCHES

1. Do not apply touch-up paint to damaged paint areas that involve minor scratches.
2. Panels or flashings that have severe paint and/or substrate damage shall be replaced as directed by the Architect's or Owner's representative.

B. CLEANING AND REPAIRING

1. At completion of each day's work and at work completion, sweep panels, flashings, and gutters clean. Do not allow fasteners, cuttings, filings, or scraps to accumulate.
2. Remove debris from project site upon work completion or sooner, if directed.

END OF SECTION

SECTION 07620 – SHEET METAL FLASHING AND TRIM

PART 1 – GENERAL

1.1 SUMMARY

A. Section Includes:
1. Parapet Copings and Flashings
2. Roof flashings
3. Reglets and counterflashing over bituminous base flashings
4. Gutters
5. Strainers
6. Plumbing Vents
7. Counterflashings for roof hatches
8. Flashings for electrical conduits, mechanical lines, and plumbing water lines roof penetrations
9. Equipment Roof Curbs and Flashing
10. Pipe Downspouts

1.2 REFERENCES

A. California Building Code, current edition, Chapters 14 and 15.

B. American Society for Testing and Materials (ASTM)

A480/A480M	General Requirements for Flat-Rolled Stainless Steel and Heat Resisting Steel Plate, Sheet, and Strip.
A653/A653M	Sheet Steel, Zinc-Coated (Galvanized) or Zinc – Iron Alloy Coated by the Hot-Dip Process
B32	Solder Metal
B209	Aluminum and Aluminum-Alloy Sheet and Plate.
B370	Copper Sheet and Strip for Building Construction
B749	Lead and Lead Alloy Strip, Sheet and Plate Products
D4601	Asphalt-Coated Glass Fiber Base Sheet Used in Roofing

C. National Roofing Contractors Association (NRCA)
1. NRCA Manual - Fifth Edition.

D. Sheet Metal and Air Conditioning Contractors National Association, Inc. (SMACNA)
1. SMACNA Manual - Architectural Sheet Metal Manual, Current Edition

1.3 SUBMITTALS

A. Shop drawings showing material profile, jointing pattern, jointing details, fastening methods and installation details.

B. Product data.

C. Manufacturer's installation instructions.

D. Samples for each type of sheet metal flashing and trim indicated with field-applied color finishes.

1.4 STORAGE AND HANDLING

A. Stack preformed and pre-finished material to prevent twisting, bending, or abrasion and to provide ventilation.

B. Prevent contact with materials during storage that may cause discoloration, staining or damage.

PART 2 – PRODUCTS

2.1 SHEET MATERIALS

A. Galvanized Steel: ASTM A653/A653M-02, G90.

B. Aluminum: ASMT B209, 3003-H14 or 5052-H34c Alloy.

2.2 ACCESSORIES

A. Fasteners: round head, galvanized steel with soft neoprene washers at exposed fasteners. Finish exposed fasteners same as flashing metal.

B. Self-Adhesive Flashing: 40 mils, nominal, thickness composite sheet, fabricated with 8-mil polyethylene film backing and 32-mil rubberized asphalt sheet waterproofing.

1. Acceptable Products: as follows, or ENGINEER-approved equal.
   a. Perm-A-Barrier sheet by Grace Construction Products, Cambridge, MA
   b. Carlisle Coatings and Waterproofing CCW-705T-WF
   c. Henry Company, Blueskin-SA
   d. FortiFlash 40 Recessed Window Flashing by Fortifiber.
2. Furnish with prefabricated corner pieces, if available from sheet manufacturer. Provide manufacturer's edge and top sealant or mastic, and primers.

C. Ice Dam Underlayment: ASTM D1970, Rubberized asphalt coated polyethylene film, 40 mils thick, Ice and Water Shield, by W.R. Grace & Co., Cambridge, MA, or ENGINEER-approved equal.

D. Metal Primer: For repair of Galvanized sheet metal, Zinc type, Galvilite by ZRC or ENGINEER-approved equal.

E. Protective Backing Paint: Bituminous.

F. Sealant: Two-component, polyurethane-type in accordance with these Specifications.

G. Solder: ASTM B32; Grade Sn50, flux type and alloy composition as required for use with metals to be soldered. Raw muriatic acid for galvanized steel; rosin for lead; non- corrosive soldering salts for uncoated copper and acid-type flux formulated for soldering stainless steel.

2.3 PREFABRICATED COMPONENTS

A. Reglets and Counterflashing: Surface-mounted or recessed as indicated on the drawings, galvanized steel, 24 gauge reglet with 26 gauge counterflashing, face and ends covered with plastic tape. SPRINGLOK; manufactured by Fry Reglet Corp., Alhambra, CA, or ENGINEER-approved equal.

2.4 WALL SHEET METAL FABRICATIONS – WALL FLASHING

A. Through-Wall Flashing - Masonry: Fabricate continuous flashings in minimum 96"-long sections, under copings, at shelf angles, and where indicated. Fabricate discontinuous lintel, sill, and similar flashings to extend 6 inches beyond each side of wall openings. Form with 2-inch-high end dams. Fabricate from the following material:

1. Galvanized Steel: 24 gauge thick.

B. Openings Flashing in Frame Steel Stud Construction: Fabricate head, sill, jamb, and similar opening flashings to extend 4 inches beyond wall openings. Form head and sill flashing with 2 inch high end dams. Fabricate from the following material:
   1. Galvanized Steel: 24 gauge thick.

2.5 FABRICATION

A. Form sections true to shape, accurate in size, square and free from distortion or defects. Fabricate all components per SMACNA standards unless more stringent conditions are imposed by the Roofing Contractor, in that case the more stringent conditions shall prevail.

B. Fabricate cleats and starter strips of same material as sheet, interlockable with sheet.

C. Form pieces in longest practical lengths.

D. Hem exposed edges on underside ½-inch; miter and seam corners.

E. Form material with flat lock seam.

F. Solder lap seams of all non-moving metal joints and seal other metal joints. After soldering, remove flux. Wipe and wash solder joints clean.

G. Fabricate corners from one piece with minimum 18-inch-long legs; seam for rigidity, seal with sealant.

H. Fabricate vertical faces with bottom edge formed outward ¼-inch and hemmed to form drip.

I. Fabricate flashings to allow toe to extend 2 inches over roofing. Return and break edges.

J. Provide expansion joints for gutters at every 30 feet. Fabricate per SMACNA details.

2.6 FINISH

A. Shop prepare and prime exposed ferrous metal surfaces.

B. Back paint concealed metal surfaces with protective backing paint when in contact with copper, redwood, or red cedar.

PART 3 – EXECUTION

3.1 INSPECTION

A. Verify roof openings, curbs, pipes, sleeves, ducts or vents through roof are solidly set, can’t strips and reglets in place and nailing strips located.

B. Verify membrane termination and base flashings are in place, sealed, and secure.

C. Beginning of installation means acceptance of existing conditions.

3.2 PREPARATION

A. Field measure site conditions prior to fabricating Work.

B. Install starter and edge strips and cleats before starting installation.

C. Install reglets true to lines and levels. For surface-mounted seal top of reglets with sealant.

D. Insert counter-flashings into reglets to form tight fit. Seal flashings into reglets with sealant.

E. Secure flashings in place using concealed fasteners. Use exposed fasteners only in locations approved by Architect.

F. Lock and seal all joints.

G. Apply plastic-cement compound between metal flashings and felt flashings.

H. Fit flashings tight in place. Make corners square, surfaces true and straight in planes and lines accurate to profiles.

I. Seal metal joints watertight.

3.3 INSTALLATION

A. Wall Flashing: Flashing shall be installed in such a manner so as to prevent moisture from entering the wall or to redirect it to the exterior. Flashing shall be installed at the perimeters of exterior door and window assemblies, penetrations and terminations of exterior wall assemblies, exterior wall intersections with roofs, decks, balconies, and similar projections and at built-in gutters and similar locations where moisture could enter the wall. Flashings with projecting flanges shall be installed on both sides and the ends of copings, under sills and continuously above projecting trim, Section 1405.3 CBC.

1. General: Install sheet metal wall flashing to intercept and exclude penetrating moisture according to SMACNA recommendations. Coordinate installation of wall flashing with installation of wall-opening components such as windows, doors, and louvers.
2. Through-Wall Flashing: Installation of manufactured or formed through-wall flashings are specified in this Section.
3. Openings Flashing in Frame Stud Construction: Install continuous head, sill, jamb, and similar opening flashings to extend 4 inches beyond wall openings. Install over self-adhesive flashings.
4. Sealants for penetrations: specified in section 07 92 00 Joint Sealers.
5. Submit shop drawings showing details for approval and use minimum 28 gauge (0.0156 inch thick) stainless steel.

B. Parapet Copings and Flashings: Use 20 gauge galvanized steel. Provide all copings and caps of the types and shapes indicated on the Drawings. Install Self-Adhesive Flashing (Ice dam) under copings. Build in integral expansion joints allowing for movement of the metal without resulting in distortion of coping or leaks of any kind. All Work shall be watertight.

C. Roof Flashings: Provide roof flashings as indicated in drawings and required to complete entire project. Submit shop drawings showing details for approval, use minimum of 24 gauge galvanized steel.

D. Reglets and Counterflashings: Minimum 24 gauge as detail in drawings, submit shop drawings.

1. Reglets: For Surface-mounted and imbed applications.
2. Counterflashings: Over bituminous base flashings.
3. Counterflashings: Roof mounted mechanical equipment and vent stacks.
4. Counterflashings: Roof Hatches and Skylights.

E. Roof Joint Cover Flashings: Provide roof joint covers as indicated in drawings. Submit shop drawings showing details for approval and use minimum of 24 gauge galvanized steel. Fabricate tops slope to drain.

F. Gutters: Fabricate to detail of 18 gauge galvanized sheet metal minimum 4-inch profile with a 1” reveal lip, 8-inch flange under roofing. Install an expansion joint every 30 linear feet of gutter; install cover plates over expansion joints. Fabricate gutter without longitudinal seams. Install cradles of ¼-inch x 1-1/2 inch galvanized steel 16 gauge at 36-inch centers. Gutters shall rest in cradles, but shall not be mechanically fastened to allow for expansion and contraction. Install screens over gutters where trees are adjacent.

G. Rigid Conduit Downspouts and Strainers: Downspouts shall be 20 gauge galvanized steel, rectangular unless noted otherwise. Strainers shall be 10 gauge galvanized steel wire basket type. Provide all anchor clips and straps as required for installation. Install a wire basket strainer in all downspouts at gutter level. Rivet and solder flange of downspout to gutters per SMACNA details. Locate downspouts every 30 feet unless otherwise noted on drawing.

1. Downspouts in non-secured areas shall be galvanized Schedule 40 steel pipe. Finish with KYNAR 500 finish in accordance with these Specifications.

H. Plumbing Vents – Vandal-Proof: Provide pre-manufactured flashings and counterflashings for plumbing vent penetrations. Flashing, 4-lb lead, seamless, reinforced with steel boot, with 6” flange.

1. Counterflashing: cast iron Vandal Flash Hood with set screw to secure to pipe. Model 1100-5 Series by Elmdor/Stoneman, City of Industry, CA. Install per manufacturer’s instructions.
2. Provide vandal proof vent cap: Zurn Z193 or approved equivalent.

I. Counterflashings for roof hatches and skylights: 24 gauge sheet metal flashing, removable, per NRCA BUR/MB-14.

J. Roof Pipe Penetrations Flashings: Provide pre-manufactured flashings and counterflashings for pipe penetrations for electrical conduits, mechanical and plumbing lines. Flashing, 4 lb lead, seamless, reinforced with steel boot, with 6” flange, field seal in accordance with these Specifications.

1. Counterflashing: Single pipe penetration, cast iron ring with set screw to secure to pipe. Model 1100-4 Series by Elmdor/Stoneman, City of Industry, CA. Install per manufacturer’s instructions.
2. Counterflashing: Multiple pipe penetration, within single pre-manufactured flashing unit: Counterflashing PVC cap, adapter base and compression nut. Compression rings and gasket. Model 915 by Elmdor/Stoneman, City of Industry, CA. Install per manufacturer’s instructions.

K. Equipment Roof Curbs and Flashing: Fabricate equipment roof curbs with 20 gauge galvanized steel, not less than 8” high, with 6” flanges, full welded construction. Provide curb flashings and counterflashings, 24 gauge galvanized sheet metal fully soldered and mitered corners. Lengths, sizes, quantities, and location to completely flash roof equipment curbs.

L. Miscellaneous: Provide miscellaneous flashings as indicated in drawings and required to complete entire project, except for items provided under other Sections. Submit shop drawings showing details for approval and use minimum of 24 gauge galvanized steel.

3.4 FINISH

A. Paint exposed metal flashings with high performance paints in colors in accordance with these Specifications.

END OF SECTION

SECTION 07720 – ROOF HATCHES
Milcor™ Roof Access Hatches – Single Leaf

PART 1 – GENERAL

1.1 RELATED DOCUMENTS

A. All of the Contract Documents, including General and Supplementary Conditions and Division 01 – General Requirements, apply to the work of this Section.

1.2 SCOPE

A. Section Includes: Furnishing and installing factory fabricated roof hatches.

1.3 REFERENCE STANDARDS

A. The following standards and publications are applicable to the extent referenced in the text.

B. American Society of Testing and Materials (ASTM) and Others:

ASTM	
A36-93a	Structural Steel
A123	Zinc (Hot-Dip Galvanized) Coatings on Iron and Steel Products
A143	Safeguarding Against Embrittlement of Hot-Dip Galvanized Structural Steel Products and Procedure for Detecting Embrittlement
A153	Zinc Coating (Hot-Dip) on Iron and Steel Hardware
A384	Safeguarding Against Warpage and Distortion during Hot-Dip Galvanizing of Steel Assemblies
A653	Steel Sheet, Zinc Coated (Galvanized) or Zinc-Iron Alloy-Coated (Galvanized) by the Hot-Dip Process
B209-14	Aluminum and Aluminum-Alloy Sheet and Plate
B308	Aluminum-Alloy 6061-T6 Standard Structural Profiles
C208/C209	Cellulosic Fiber Insulating Board
C553-13	Mineral Fiber Blanket Thermal Insulation for Commercial and Industrial Applications
C591-13	Unfaced Preformed Rigid Cellular Polyisocyanurate Thermal Insulation
D4549-11	Classification System and Basis for Specification for Polystyrene and Rubber-Modified Polystyrene Molding and Extrusion Materials (PS)
IBC 2015	2015 International Building Codes

1.4 SYSTEM DESCRIPTION

A. **Milcor™** Roof Access Hatch: Spring Mounted in Cover: Galvanized Steel, painted: **Model M-3x3.**

1.5 SUBMITTALS

A. General: Submit in accordance with Section 01300 - Submittals.

B. Product Data: Submit manufacturer's product literature and installation instructions, use limitations and recommendations.

C. Samples: Manufacturer to provide, upon request, sized to represent material adequately.

D. Technical Support: Contact the engineering group of the manufacturer as stated in 2.01A.

E. Subcontractor's approval by Manufacturer: Submit document stating manufacturer's acceptance of subcontractor.

F. Warranty: Submit a sample of manufacturer's warranty identifying the terms and conditions stated in 1.9.

G. Substitutions: To be accepted as an equal, a product substitution must have demonstrated documented field trials. Contractor guarantees that proposed substitution shall meet the performance and quality standards of this specification.

1.6 QUALITY ASSURANCE

A. Manufacturer Qualifications: Roof Access Hatch must be manufactured by a company with a minimum of 5 years' experience in the production and sales of Roof Access Hatches.

B. Installer Qualifications: A firm having at least 3 years' experience in installing Roof Access Hatches.

C. Materials: For each type of material required to complete the work of this section, provide primary materials which are the products of a single manufacturer.

D. Pre-Application Conference (As needed): A pre-application conference shall be held to establish procedures and to review conditions, installation procedures and coordination with other related work. Meeting agenda shall include review of the special details.

E. Manufacturer's Representative: Arrange to have trained representative of the manufacturer on site periodically to review installation procedures.

1.7 DELIVERY, STORAGE, HANDLING

A. Store products per manufacturer's instructions in unopened packaging until ready for installation.

B. Store products under cover and elevated above grade.

1.8 PROJECT CONDITIONS

A. Work should be performed only when existing and forecasted weather conditions are within the limits established by the manufacturer.

B. Verify that other trades with related work are complete before installing roof hatch(es).

C. Mounting surfaces shall be straight and secure; substrates shall be of proper width.

D. Observe all appropriate OSHA safety guidelines for this work.

E. Waste Disposal: This material is not defined as hazardous by the Resource Conservation and Recovery Act. It is the product users' responsibility to determine at the time of disposal. Dispose of in accordance with all federal, state, and local regulations.

1.9 WARRANTY

A. Milcor™ warrants all goods sold to be free from defects in workmanship, but limits liability to five years from date of shipment and expressly to the replacement of goods not complying with this warranty; or, at our election, a credit to original purchaser for the original purchase price paid less 1/60th of the price for each month elapsed from the original invoice date to the date of claim against this warranty.

B. Electric motors, special finishes and any other optional special components required shall be warranted separately by the manufacturers of those products.

PART 2 – PRODUCTS

2.1 MANUFACTURER

A. Provide Milcor™ Roof Access Hatches as manufactured by:

Milcor™ Company
5030 Corporate Exchange Blvd. SE
Grand Rapids, MI 49512
Phone: 800-624-8642
Fax: 855-549-2674
Email: info@milcorinc.com
Website: http://www.milcorinc.com

2.2 ROOF ACCESS HATCH

A. Milcor™ M-3x3, Single Leaf: Spring Mounted in Cover.

B. Size: Width 3’0” x Length 3’0”. Length denotes hinge side.

C. Curb: One-piece curb and frame with integral cap flashing, 3-1/2” wide mounting flanges with pre-drilled holes.
   1. Material: Galvanized steel, 14 gauge, 0.079 inch thick.
   2. Finish: Painted white.
   3. Insulation: 1 inch fiberboard
   4. Height: 12 inches.

D. Metal Cover: Flush, insulated, hollow metal construction.
   1. Material: Galvanized steel; outer cover 14 gauge, 0.079 inch thick; liner 22 gauge, 0.034 inch thick.
   2. Finish: Painted white.
   3. Insulation: 1 inch rigid foam.
   4. Load Carrying Capacity: Capable of supporting 70 psf. live load.
   5. Gasket: Extruded EPDM rubber gasket adhered to cover, continuous around cover perimeter.

E. Operating Hardware
   1. Material/Finish: Steel, zinc coated and chrome plate sealed, unless otherwise indicated or required by manufacturer.
   2. Lifting Mechanisms: Torsion bar operator assists opening upon release of latch. Covers open to 90 degrees.
   3. Hinges: Manufacturer’s recommended type for specified model.
   4. Hold-Open: Automatic hold-open arm with red vinyl coated handle for manual release.
   5. Latch: Inside latching device, with inside and outside handles and inside padlock hasp, automatically engages upon closing.

PART 3 – EXECUTION

3.1 INSPECTION

A. Verify that Milcor™ Roof Access Hatch installation will not disrupt other trades. Verify that the substrate is dry, clean, and free of foreign matter. Report and correct any defects prior to any installation.

B. Verify by comparing packing slip and box label that product is per specification.

3.2 SURFACE PREPARATION

A. Refer to manufacturer's product literature for surface preparation requirements. Surfaces should be structurally sound, free of voids, spalls, loose aggregate and sharp ridges. Remove dust, dirt, debris, or any other foreign materials.

3.3 INSTALLATION

A. Submit product design drawings for review and approval to the Architect/Specifier before fabrication.

B. Installer shall check as-built conditions and verify the manufacturer's roof hatch details for accuracy to fit the applications prior to fabrication. The installer shall comply with the roof hatch manufacturer's installation instructions.

C. The installer shall furnish mechanical fasteners consistent with the roof requirements.

3.4 CLEANING AND PROTECTION

A. Product requires no spill or leak containment. Dispose of damaged material in accordance with all governmental regulations.

B. Protect completed work from subsequent construction activities as recommended by manufacturer.

END OF SECTION

DIVISION 08
DOORS & WINDOWS

SECTION 08115 – METAL WALL LOUVERS

PART 1 – GENERAL

1.1 SECTION INCLUDES

A. Louvers and frames: Fixed Aluminum, drainable.

B. Bird screening.

C. Related Section
   1. Division 23 Heating Ventilating and Air Conditioning sections.

1.2 REFERENCES

A. AMCA 500 - (Air Movement and Control Association International) Test Method for Louvers, Dampers and Shutters.

B. ASTM B 26 - Aluminum-Alloy Sand Castings

C. ASTM B 209 - Aluminum and Aluminum-Alloy Sheet and Plate

D. ASTM B 221 - Aluminum and Aluminum-Alloy Extruded Bars, Rods, Wire, Profiles and Tubes

1.3 SYSTEM PERFORMANCE

A. Structural Performance: Provide louvers capable of withstanding effects of gravity loads and stresses within limits without permanent deformation of louver components, noise or metal fatigue caused by louver blade rattle or flutter, or permanent damage to fasteners and anchors. Wind pressures shall be considered to act on vertical projection of louvers.

B. Seismic Performance: Provide louvers capable of withstanding effects of earthquake motions determined according to ASCE 7, "Minimum Design Loads for Buildings and Other Structures": Section 11, Seismic Criteria.

C. Louver Performance (when a 4- by 4-foot louver is tested using AMCA Standard 500 and beginning of water penetration is 0.01-ozs-per-sq. ft free area)
   1. Free Area: 54 percent, nominal.
   2. Maximum Pressure Drop: 0.10 inches w.g.
   3. Water Penetration: Maximum of 0.01 ounces per square foot of free area at an air- flow of 873 feet per minute free area velocity when tested for 15

D. Thermal Movements: Provide louvers that allow for thermal movements resulting from following maximum change (range) in ambient and surface temperatures by preventing buckling, opening of joints, overstressing of components, failure of connections, and other detrimental effects. Base engineering calculation on surface temperatures of materials due to both solar heat gain and nighttime-sky heat loss.
   1. Temperature Change (Range): 120°F ambient; 180°F, material surfaces, Air-Performance, Water-Penetration, Air-Leakage, and Wind-Driven Rain Ratings: Provide louvers complying with performance requirements indicated, as demonstrated by testing manufacturer's stock units identical to those provided, except for length and width according to AMCA 500-L.

1.4 SUBMITTALS

A. Shop drawings showing, layout, elevations, dimensions, and tolerances; head, jamb, and sill details; blade configuration; screening and frames.

B. Product data on pre-assembled louvers describing design characteristics, maximum recommended air velocity, free area, materials and finishes.

C. Manufacturer's installation instructions.

D. Three samples illustrating blade configuration, gauge of metal and screening.

1.5 QUALITY ASSURANCE

A. Manufacturer: Company specializing in manufacture of AMCA certified louvers with 5 years' experience.

PART 2 - PRODUCTS

2.1 MANUFACTURERS

A. Products of following manufacturers form basis for design and quality intended.
   1. Ruskin Manufacturing, Kansas City, MO.

B. Or equal as approved in accordance with Division 01 – General Requirements for Substitutions.

2.2 MATERIALS

A. Basis of Design Product: Ruskin ELF375DX, extruded aluminum, fixed, drainable.
   1. Louver Size: 4 inches deep.
   2. Louver Blade: Sloped at 37.5 degrees; centers 5-3/32 inches. Minimum material thickness of 0.081inch.
   3. Louver Frame: Channel shape, mechanically fastened corner joints, material thickness of 0.081 inch.

B. Aluminum Louver Frame: welded construction.

C. Aluminum Extrusions: ASTM B221, alloy 6063-T5.

D. Aluminum Sheet: ASTM B209, alloy 3003 or 5005 with temper as required for forming, or as otherwise recommended by metal producer for required finish.

E. Aluminum Castings: ASTM B26, alloy 319.

F. Fasteners: Of same basic metal and alloy as fastened metal or 300 Series stainless steel, unless otherwise indicated. Do not use metals that are incompatible with joined materials.
   1. Use types and sizes to suit unit installation conditions.

2.3 ACCESSORIES

A. Bird Screen: Interwoven wire mesh of aluminum, 0.063 diameter wire, 1/2-inch open weave, square design.

B. Flashings and Closures: Of same material as louver frame.

C. Sealants: As recommended by louver manufacturer.

2.4 FABRICATION

A. Head, Jamb, and Sill Flashings: Roll formed to required shape, one piece per location.

B. Screens: Install screen mesh in shaped frame with reinforced corner construction; screw to louver frame.

2.5 FINISHES

A. Prime and finish with Kynar 500 (PVDF) resin coating. Minimum 70% resin. AA-M12C42R1X , AAMA 2605.

B. Colors: as selected by Architect.

PART 3 – EXECUTION

3.1 INSPECTION

A. Verify that prepared openings and flashings are ready to receive Work and opening dimensions are as indicated on shop drawings.

B. Beginning of installation means acceptance of existing conditions.

3.2 INSTALLATION

A. Install louver assembly in accordance with manufacturer's instructions.

B. Install louvers level and plumb.

C. Secure louvers in opening framing with concealed fasteners.

D. Install flashings and align louver assembly to ensure moisture shed from flashings and diversion of moisture to exterior.

E. Install bird screening to interior of louver. Hinge screens for access.

3.3 CLEANING

A. Clean surfaces and components.

END OF SECTION

SECTION 08220 – FIBERGLASS DOORS AND FRAMES

PART 1 – GENERAL

1.1 DESCRIPTION

A. Work Included
1. Openings as shown in the schedule, on the plans and bound into these specifications.
2. The removal of existing doors, frames, glass, etc. as noted.
3. The installation of new opening systems that include aluminum frames, fiberglass doors, fiberglass panels, door hardware as scheduled in the specifications.
4. Heavy Duty Wide Stile FRP Doors

1.2 QUALITY ASSURANCE

A. Manufacturer's Certification: Manufacturer is to have a minimum of 5 years experience in the production of pre-hardwared and pre-assembled door systems, using the type of materials specified for this project.

B. Warranties
1. Wide Stile FRP doors will carry a 25-year limited warranty on doors structural integrity, main frame, and the lamination between face sheets and core.
2. The entire system (excluding hardware) will be guaranteed for 10 years.
3. Each door hardware component will carry its own manufactures warranty and should not be confused with the warranty of the FRP door and frame.

C. Test Reports and Performance Requirements: Entrance systems must comply with requirements for system performance characteristics as determined by the testing methods that follow:
1. Two copies of test reports covering the test procedures as listed are to be included with the submittals.
2. Complete System Requirement Tests – Complete system units that include door, frame and hardware are to meet the following criteria:
   a. Thermal Transmittance Tests:
      1) U-factors expressed in Btu/hr-ft(2)-F – AAMA 1503-98-.072
      2) R-value expressed in hr-ft(2)-F/Btu-ASTM 1503-98- 1.39
   b. Structural Performance Tests
      1) Air infiltration:
         ASTM E283 @ 1.57 psf (25 mph) – 0.31 cfm/ft (2)
         ASTM W182 @ 6.24 psf (50 mph) – 0.97 cfm/ft (2)
      2) Water Penetration:
         ASTM E331 – 15 Min Cycle – NO ENTRY
      3) Uniform Load – ASTM E330 – (+) – 112.5 psf
   c. STRUCTURAL INTEGRITY TESTS:
      1) Exit Bar Pull Off Test – 7975 lbs. minimum load resistance before exit bar disengages from door
      2) Closer Pull Off – 8000 lbs. minimum load resistance before closer disengages from door
   d. WINDBORNE DEBRIS RESISTANCE TESTS:
      1) Missile Impact Test – PA201 – 94 – PASSED
      2) Cyclic Wind Pressure Test – PA203 – 94 – 60PSF
      3) Forced Entry Test – SFBC 3603.2 – 300 lbs. – PASSED
3. Door Leaf Requirement Tests – Door leaf without frame or hardware and with a minimum lite cut out of 12" x 24" is to meet the following criteria:

a. Concentrated load bow test – 5000 lbs minimum load with no permanent deflection to door leaf
b. Torsion twist test - @300 lbs. Minimum load with no permanent set to door leaf.

4. Face Sheet Requirement Tests – FRP material and FRP face sheets with core material are to meet the following criteria:
   a. Center Door Section (face sheet/core/face sheet)
      1) Gardner Impact Test – ASTM D5420 – 413.72 in-lb.
   b. FRP Material (MR84)
      1) Flexural Strength Test – ASTM D790 13.3 x 103
      2) Izod Impact Strength Test – ASTM D256 – 15 ft-lb/in thickness
      3) Barcol Hardness – ASTM D5420 – 50

1.3 MANUFACTURERS

A. Acceptable Manufacturers Vale Door – Collingdale, Pa.
   1. This is a performance specification. There are no Patents, Contractual Agreements, or any other type of restrictions that limit competition with the products described in this Performance Specification. However, it should be noted that the manufacturer listed in this specification would have to make some modifications to their standard products and new dies and designs may be required to adhere to the demands of this specification.

B. Approved Equal Products
   1. Equal products by manufacturers not listed in this specification will be considered only if those products are in strict compliance with the demands of this performance specification. The manufacturer name, address, phone number and any modifications needed to a standard product must be noted on the bid reply form.

C. Approval Procedure
   1. Submit manufacturer's technical data for each type (stile classification) of door. Include all frame & door sections, elevations, and details.
   2. Two copies of current test reports are to be included with the submittals.
   3. Submit two samples of each door stile classification that shows rails, stiles core, joint construction and edge trim.

D. Shop drawings
   1. Submit SIX sets of shop drawings for the fabrication and installation of the Doors and Frames, and associated components of the work. Included wall elevations and detail sections of every typical composite member. Show frame anchoring, frame repairs to existing frames, glazing details, interior and exterior wall repairs and any other component or accessory required to complete each door opening
   2. Include details of main frame corner joint construction on doors, Stile and Rail size, Core material, Vision lite moldings, Louvers and Factory Finishing Specifications.
   3. Details of hardware reinforcing material, size & thickness, locations on both door(s) and frame and method of attachment.

1.4 PRODUCT DELIVERY, STORAGE AND HANDLING

A. Identification
   1. Each door, frame and any additional components will be tagged with a mark or number which correlates with the designation system used for shop drawings.

B. Protection
   1. All material will be protected during transit and storage from soiling and deterioration.

PART 2 – PRODUCTS

2.1 DOOR SYSTEM CLASSIFICATIONS:

A. Vale Door Solutions V600

B. Materials

C. Aluminum members:
   1. Doors, frames, miscellaneous components, and entrance systems accessories are to be from the same manufacturer. Splitting the source for these items will not be permitted.
   2. Provide alloy and temper as recommended for resistance to corrosion and color control. Aluminum member references are ASTM B221 for extrusions and ASTM B209 for sheets.

D. Aluminum frames:
   1. Standard closed back frames shall be of extruded aluminum 6063-T5 alloy and a wall thickness of .125".
   2. Vertical Members – all vertical frame jambs and mullions will be full height of opening.
   3. Sections – Tube sections will be 2" x 8" with joints connected by use of reinforcing clips and machine screws.
   4. Finish is 313, or as selected by the architect.
   5. All exposed screws must be stainless steel with spanner heads.

E. Closed back frames are 2" X 8" X .125" tubing (or equal).

2.2 FIBERGLASS (FRP) PANELS

A. Aluminum Edged Fiberglass (FRP) Panels
   1. Construction - Panels will be constructed of two sheets of .120"-thick fiberglass sheets bonded to ¾" core material.
      a. Panel thickness will be 1". An aluminum frame surrounds the perimeter of the panel, and measures 1" x 1" x 1" with 1/8" wall thickness.
   2. Wood edged panels will not be accepted.
   3. Core material will be 24-psi density polystyrene with a flame spread rating of no more than 25. Core material must have a proven record for use in panel fabrication – without delaminating
   4. Urethane cores will not be accepted.
   5. FRP face sheets will be .120-inch minimum thickness with a pebble like surface
   6. COLOR will be selected from Vale color chart.
   7. Provide UV Protection equal to "Kal-Lite" premium greenhouse "Resin-Acrylic" modified as a UV Inhibitor.
   8. PANELS are by Vale model VC90 (OR EQUAL)

2.3 EXTRA HEAVY DUTY FIBERGLASS WIDE STILE (FRP) DOORS

A. Structural Main Frame – Doors have an aluminum main frame constructed from extruded aluminum 6063 – T6 alloy. Doors are 1 ¾" thick. Main frame tube is to be a single extruded unit measuring 1½" x 5¾" (OD) on both side stiles and 6" (OD) Top and Bottom rails. Spliced extrusions that are joined together to measure 6" will not be accepted.

B. Main Frame Wall Thickness

1. Side Stiles	Minimum 3/16" thick hinge edge wall
2. Top and Bottom Rails	Minimum 1/8" thick outside edge wall (tie rod spline built into tube)
3. All Rails and Stiles	Minimum 1/8" thick face walls

4. All Rails and Stiles Minimum 1/8” thick inside edge wall

C. Main Frame Joinery – Assembly for the meeting joints of the Rails and Stiles on the main frame are to be MORTISE & TENON on all four joints. Secured with: 2 Tie Rods in Head Rail and 1 Tie Road in Bottom Rail. “WELDED JOINTS WILL NOT BE ACCEPTED”

D. Face Sheets – Face sheets will be fiberglass reinforced polyester. .120” thick and have A pebble-like embossed finish. Face sheet color to be selected from Vale’s color chart.
   1. FRP face sheets are MR84 high impact FRP MATERIAL that has been tested by ASTM D5420 Gardner Impact Test rating no lower than 413.72 in-lb (or ENGINEER-approved equal)

E. Core Material will be 25 psi density polystyrene with a flame spread rating of no more than 25.

F. Inter-Loc Edge Trim – All aluminum trim is completely removable. All parts of the door are REPLACEABLE and REPAIRABLE in the field. No fastening devices are exposed on the Stile Edge Trims.

G. Snap-on or screw-on stile trim will not be accepted.
   1. Edge Trim finish is 313, or as selected by architect

H. Weather Stripping – Center stiles of pairs will have pile weather-stripping .500 backing width, .5” pile height.

I. Hardware Reinforcing – Closer reinforcing to be ¼” aluminum inserted into head rail.
   1. Other surface applied hardware is reinforced with the standard mainframe tube wall thickness of 1/8” . Reinforcing for mortise and concealed hardware is to be done per template requirements.
   2. Sex Or Thru Bolts Will Not Be Accepted

2.4 VISION LITES

A. Fabrication – Vision lite trim moldings will be aluminum extrusion – 6063-T5 alloy and removable from the inside only. All exposed screws must be stainless steel with spanner heads.

B. Divided Lites will be factory glazed using ¼” or 1” thick glass as listed on the door schedule. Hardware that conflicts with the location of the vision lite kit and any other door hardware will not be accepted. Replacing glass must be done without removing any other hardware.

C. Lite Kit Finish is 313 or as selected by architect

D. Door vision kits are by the door manufacturer only.

2.5 RECESSED FLUSH PULLS

A. Fabrication – Recessed pull handle 6” x 8½” x 1-9/16” manufactured from all extruded aluminum 6063-T5 alloy. Unit is welded together. Pull will be finished to match door edge trim or as specified. All exposed screws must be stainless steel with spanner heads.

B. Safety feature - Pull is to be secured to main frame of door without any of fastening devices exposed to the fingers when hand is inserted into pull to open door.

C. Pull is to be supplied and installed at factory by door manufacturer. All necessary reinforcements and modifications to the door for receiving the recessed flush pull is to be done at the factory. Pull is also guaranteed for 10 years.
   1. Pull Finish is 313 or as selected by architect.

D. Recessed flush pulls are by the door manufacturer only

PART 3 – MISCELLANEOUS MATERIALS:

3.1 GLASS AND GLAZING

A. GLASS – For door vision lites and frame panels will be ¼" clear tempered safety glass (ASTM C1048, TYPE I) or Sheet glass (ASTM C048, TYPE II) which has been heat strengthened by manufacturer's standard process. GLASS color will be clear.

B GLAZING – Door vision lites will be glazed at the factory. All other glazing will be done in the field.

END OF SECTION

SECTION 08330 – OVERHEAD COILING DOORS

PART 1 – GENERAL

1.1 SECTION INCLUDES

A. Standard overhead coiling doors; electric operated; factory pre-coated field painted finish.

1.2 REFERENCES

A. ASTM A653/A653M - Standard Specifications for Steel Sheet, Zinc-coated (Galvanized) or Zinc-Iron Alloy Coated (Galvanized) by the Hot-Dip Process, latest edition.

B. UL Bulletin 325 - Door, Drapery, Gate, Louver and Window Operators and Systems.

1.3 SYSTEM DESCRIPTION

A. Electric motor operated unit with manual override in case of power failure.>> Fire rated doors with fusible link activated with automatically governed closing speed, approved by Fire Marshal for installation in type of construction in which testing was recorded.

B. Provide UL Approval numbers and State Fire Marshal approval numbers for door assemblies, sills and heat/smoke release devices, for the fire rating required and for the type of construction as detailed on the drawings.

1.4 WARRANTY

A. Warrant door units for 2 years against defects and workmanship and materials.

B. Submit per Division 01 – General Requirements.

1.5 SUBMITTALS

A. Shop drawings. Provide pertinent dimensioning, general construction, component connections and details, anchorage methods, hardware location, and installation details.

B. Product data.

C. Manufacturer's installation instructions.

D. Three samples of slats.

E. Manufacturer's operation and maintenance data.

PART 2 – PRODUCTS

2.1 MANUFACTURERS

A. Products of following manufacturers form basis for design and quality intended.
   1. Cookson Company, Phoenix, AZ. UL No. R2712
   2. Cornell Iron Works, Inc., Mt. Juliet, TN. UL No. R1422
   3. Overhead Door Co., Dallas, TX. UL No. R5490
   4. Mckeon Door Company

B. Or equal as approved in accordance with Division 01 – General Requirements for Substitutions.

2.2 MATERIALS

A. Curtain:
   1. Steel; Interlocking slats, G-90 galvanized in accordance with ASTM A653/A653M, bonderized, with rust inhibiting epoxy primer and final coat as specified herein.
      a. Slat: No. 4, 16 gauge, 2-3/4 inch high, 3/4 inch thick, steel.

B. Fit each slat with endlocks to act as wearing surface in guides and to prevent lateral

movement; fit bottom with angles to provide reinforcement and positive contact with sill in closed position.

C. Curtain Guides: Formed galvanized steel angles for required sizes and configurations.

D. Bottom Bars: two, equal leg 2- by 1/8-inch steel angles, mechanically joined back-to-back, with Cookson Featheredge Safety system.
   1. Galvanized steel with baked enamel.

E. Wall Brackets: Steel, 1/4” thick, bolted to wall with min. 1/2” bolts.

F. Roller Shaft (Counterbalance): Steel pipe and helical steel spring system capable of producing sufficient torque to assure easy operation of curtain from any position; adjustable spring tension. Finish: rust-inhibiting prime paint.

G. Housing/Hood: 24 gauge galvanized and primed steel; internally reinforced to maintain rigidity and form.
   1. 24-gauge primed steel housing to cover gear system at both ends of roller shaft. Minimum size to follow profiles at end of housing. Paint to match housing.

H. Weatherstripping: Water and rot proof, resilient type; located along jamb edges, bottom of curtain and within housing, at non-fire rated assembly.

I. Locking: Provide one cylinder lock keyed to building standard.
   1. At electrically operated doors provide Interlock Switch attached to surface of guide to disable motor operation if locking devices are not disengaged. Provide conduit and wiring from interlock to control.

2.3 MODEL DESCRIPTION

A. Model FCM, Gearhead, motorized operation, full weatherstrip for exterior application, electric operated; face of wall mounted, size as scheduled.

2.4 ELECTRIC OPERATOR

A. Electric Operator: UL approved side mounted; adjustable friction clutch, double shoe brake system actuated by independent full line voltage solenoid controlled by motor starter; fully enclosed positive gear driven limit switch; fully enclosed magnetic cross line reversing starter.
   1. Verify and coordinate motor requirements with manufacturer and project electrical system.

B. Control Station: Three-button control for each operator, OPEN/CLOSE/STOP, with OFF/ON keyed Lockout surface mounted; 24-volt circuit.

C. Safety Device on Electrically Operated Doors: Located at bottom of doors, full width; wired to reverse door upon striking object; vinyl covered to provide smoke seal, Cookson FEATHEREDGE, UL approved to meet Bulletin No. 325.

D. Electrically interlock: floor level disconnects and chain hoist for emergency manual operation.

2.5 FINISH

A. Finishes as specified below for curtain, accessories, hardware, fasteners and supports.

B. Thermosetting polyester top coat factory applied, minimum thickness 0.6 mils each side (Cookson FinalCote).

C. Color to be selected by Architect.

PART 3 – EXECUTION

3.1 INSTALLATION

A. Install overhead coiling doors, at motorized units install electric operators and controls, in accordance with manufacturer's instructions. Coordinate installation with electric service.

B. Fit, align and adjust door assembly level and plumb; provide smooth operation.

3.2 START-UP SERVICE

A. Provide manufacturer's inspection services and inspection.

END OF SECTION

DIVISION 09
FINISHES
(NOT USED)

DIVISION 10
SPECIALTIES
(NOT USED)

DIVISION 11
EQUIPMENT

SECTION 11001 - PUMP ROOM EQUIPMENT

PART 1 – GENERAL

1.1 WORK INCLUDED

A. Pump Room equipment items required for this Work as indicated on the Drawings and specified herein.

1.2 QUALITY ASSURANCE

A. Qualifications of Workers:
   1. The entity performing the work of this Section shall have been successfully engaged in the respective trade for at least five (5) years immediately prior to commencement of the Work.
   2. For actual construction operations, use only trained and experienced workers with a minimum of three (3) years experience with the materials and methods specified.
   3. Provide at least one person who shall be present at all times during execution of the work of this Section, with a minimum of five (5) years experience with the type of materials being installed, the referenced standards, and who shall direct all Work performed under this Section.

B. All equipment supplied or work performed shall comply with regulations governing public Pump Rooms and spas as contained within Chapter 31 of California Building Code, latest edition.

1.3 SUBMITTALS AND SUBSTITUTIONS

A. Provide submittals in conformance with the requirements of Division 01.

B. Required submittals include:
   1. Pump Room Fittings as specified in Article 2.03 of this Section.
   2. Pump Room Deck and Mechanical Equipment as specified in Article 2.05-2.21 of this Section.

C. Submit proof of qualifications as specified in Article 1.02.A of this Section.

D. The equipment shown on the plans represent the first listed items in the technical specifications. The CONTRACTOR shall be responsible for all required field coordination and installation of any approved equal product to provide a fully working and warranted system. The CONTRACTOR shall submit detailed shop drawings for any products used other than the first listed specified items provided products are equal to that of first listed equipment. Shop drawings shall include details and quality equal to the original plans and construction documents. The CONTRACTOR shall provide any and all required engineering including but not limited to structural and anchorage requirements for any proposed equipment other than the first listed specified equipment. The CONTRACTOR is responsible to provide a factory certified representative(s) to commission/start-up and provide on-site training for all Pump Room mechanical equipment provided.

1.4 PRODUCT HANDLING

A. Protection: Use all means necessary to protect Pump Room equipment items before, during and after installation and to protect the installed work specified in other Sections.

B. Replacements: In the event of damage, immediately make all repairs and replacements necessary to the approval of the OWNER's Representative.

PART 2 – PRODUCTS

2.1 SAFETY EQUIPMENT

A. Pool Safety Signs: All signs located on fences to be removed shall be removed, stored, and reinstalled on the new fence. Placement at the pool site shall be in conformance with Health Department Inspector.

2.2 EMERGENCY DRENCH SHOWER & EYEWASH

A. Combination, floor mount, epoxy coated unit with Quick Switch Element with Filter to allow water supply piping flush; Existing emergency Drench Shower & Eyewash to be reinstalled per plans.

2.3 PUMP ROOM CIRCULATION PUMP

A. Short Set Lineshaft Vertical Turbine Pump: ‘Xylem’ VIT Series with two (2) inline basket strainers. Model number, design condition and quantity per plans.

2.4 PUMP ROOM FILTER

A. Store and reuse the existing three-line assembly carbon steel polyethylene lined steel filter per ‘EPD USA Inc’. Model number and quantity per plans.

2.5 PUMP ROOM HEATER

A. Store and reuse the existing ‘Raypak High Delta’ heater. Model number and quantity per plans.

2.6 PUMP ROOM WATER CHEMISTRY & FILTER BACKWASH CONTROLLER

A. Automated Water Chemistry & Filter Backwash Control System: with ORP, pH, ppm, and temperature sensors in LED flowcell with integral flowswitch, automatic filter system backwash control, Gbit Ethernet/EZ Connect Package mounted on PVC backplate; filter interface panel with influent/effluent pressure gauges, Signet digital flowsensor, iron pipe saddle and auto probe rinse package. 'BECS Technology' #BECSYS7-XS1GP1XOXPBF; no known equal. Platinum Probe Sensor PT# 9660022 for Liquid Chlorine system.

2.7 CHLORINE FEED/STORAGE SYSTEM

A. Pump Room feed pump(s) shall be 'Stenner", fed from existing 500-gallon, Chemtainer double walled Chlorine tank. Provide factory mounting brackets and 'Vapor-Lok' fittings typical. Hard pipe to point of injection. Model number and quantity per plans.

2.8 ACID STORAGE/ FEED SYSTEM

A. Pump Room feed pump(s) shall be 'Stenner", fed from existing 350-gallon, Chemtainer double walled Acid tank. Provide factory mounting brackets and 'Vapor-Lok' fittings typical. Hard pipe to point of injection. Model number and quantity per plans.

2.9 ACID FUME SCRUBBER

A. Provide #7747090 Acid Fume Scrubber; one for each chemical room with two (2) refills each. Quantity and location per plans.

2.10 PUMP ROOM FLOWMETERS

A. In-line vertical flow meters: 'Signet' or approved equal. Size and quantity per plans.

PART 3 – EXECUTION

3.1 SURFACE CONDITIONS

A. Inspection:

1. Prior to installing the items of this Section, carefully inspect the installed Work of other trades and verify that all such Work is complete to the point where this installation may properly commence.
2. Verify that the Pump Room equipment items may be installed in strict accordance with original design, pertinent codes and regulations, and the manufacturers' recommendations.

B. Discrepancies:
1. In the event of discrepancy, immediately notify the OWNER's Representative.
2. Do not proceed with installation in areas of discrepancy until all such discrepancies are fully resolved.
3. Failure to notify the OWNER's Representative and give written notice of discrepancies shall constitute acceptance by the Installer of existing conditions as fit and proper to receive its Work.

3.2 INSTALLATION

A. Supply and install items of Pump Room equipment in strict accordance with applicable codes and regulations, the original design, and the manufacturer's published recommendations, anchoring firmly and securely for long life under hard use.

B. Coordinate with other trades to insure all imbedded items are set plumb and flush. Railing ends must have anchor sockets and escutcheon plates. Be certain that deck equipment and railings are properly bonded prior to imbedding.

C. All equipment shall be braced and/or anchored to resist a horizontal force acting in any direction using the criteria shown on the Drawings.

3.3 INSTRUCTION

A. The CONTRACTOR shall provide a factory certified representative(s) to start-up and certify proper installation, operation, and full warranty status of all Pump Room mechanical equipment. The CONTRACTOR shall provide not less than two 8-hour days of on-site training for facility staff in the operation and maintenance of the Pump Room mechanical equipment and systems. The two 8-hour days shall be separated by a minimum of seven calendar days and be completed within the 14-day start-up period.

3.4 EQUIPMENT ACTIVATION

A. All water chemistry and filtration mechanical equipment shall be operational upon filling of pool after plaster. Chemicals and other related support items as supplied by CONTRACTOR, shall be in supply at start-up.

B. For the first fourteen (14) calendar days after completion of the pool plaster, brush all plastered surfaces at least twice a day and coordinate with General CONTRACTOR to ensure that the plaster is carefully maintained after the initial fourteen-day period. In addition, coordinate with the CONTRACTOR to ensure that pool filtration equipment is continuously running during the initial fourteen-day period.

C. CONTRACTOR to provide qualified personnel to operate pool equipment for a period not less than fourteen (14) days after the pool is placed in operation, or until the OWNER takes occupancy of the facility or letter of substantial completion. During this time, CONTRACTOR shall instruct and supervise the OWNER's personnel in the various operating and maintenance techniques involved. CONTRACTOR shall be responsible for supply of chemicals during this not less than fourteen (14) day period and at time of turnover to OWNER, chemical storage tanks shall be full. (OWNER's personnel shall be fully trained and capable of assuming Pump Room maintenance tasks, training may begin before OWNER takes occupancy).

3.5 CLEAN-UP

A. Upon completion of Pump Room equipment, remove all debris, materials and equipment occasioned by this Work to the approval of the OWNER's Representative.

END OF SECTION

SECTION 11240 – CHEMICAL FEED SYSTEMS

PART 1 – GENERAL

1.1 DESCRIPTION OF THE WORK

A. Furnish and install the chemical feed system with associated mounting brackets, anchoring, piping, and appurtenances, complete and operable in accordance with the Contract Documents.

1.2 SUBMITTALS

A. Submittals shall be furnished in accordance with Division 01 – General Requirements.

B. Shop Drawings
   1. Complete catalog information, descriptive literature, specifications, and identification of materials of construction.
   2. Detailed drawings and schematics showing the equipment dimensions, size, and location of connections.
   3. Power and Control wiring diagrams, including terminals and numbers.

C. Manufacturers submitting alternate chemical feed metering equipment as a System Supplier will provide all deviations on specification and must receive approval from the Engineer.

1.3 OPERATION AND MAINTENANCE MANUAL

A. Provide one (1) electronic version in PDF format plus six (6) hard copies, hard copies if requested by Owner or Engineer.

1.4 QUALITY ASSURANCE

A. System manufacturer and model shall be as described on the Drawings, or approved equal.

B. Manufacturer shall have experience in manufacturing chemical metering equipment used to accurately feed chemical in potable drinking water or wastewater.

C. All equipment provided under this section shall be obtained from a single supplier or manufacturer who shall assume full responsibility for the completeness and proper operation of the chemical controller.

D. To ensure quality and unit responsibility, the chemical controller must be assembled and tested by the manufacturer at its facility (or at the facility of the local supplier) and be a standard and regularly marketed product of that manufacturer.

E. To ensure quality and unit responsibility, the dosing pump system must be assembled and tested prior to reuse to confirm units are in working condition.

1.5 SPARE PARTS

A. Provide all spare parts anticipated to be required for the first 2 years of operation. Manufacturer shall clearly define quantity, description of part and associated part numbers as part of manufacturer's scope of supply.

B. Spare parts shall be placed in a separate container clearly marked as "Spare Parts." All parts shall be identified and clearly labeled with applicable part numbers.

1.6 WARRANTY

A. The manufacturer shall provide a 2-year full parts, materials, and fabrication warranty from the date of Final Acceptance of the supplied system.

PART 2 – PRODUCTS

2.1 GENERAL.

A. Manufacturers:
   1. BECS Technology

B. Products:
   1. BECsys7 chemical controller shall be wall mounted, installed, and programed per plans.

PART 3 – EXECUTION

3.1 INSTALLATION

A. Furnish, install, finish, and place into service the chemical dosing pump and chemical controller in accordance with the manufacture's recommendation.

B. Provide factory-trained personnel to check and certify installation and instruct the pump station personnel in the operation and maintenance. A minimum of 1 trip for 1 day total shall be provided.

END OF SECTION

SECTION 11937 – VERTICAL TURBINE PUMP
Short-Set Lineshaft (VIT) Specification

PART 1 – GENERAL

1.1 SCOPE

A. Pumps that are supplied under this specification shall be vertical turbine open lineshaft design with lubrication method, including a bowl assembly, column assembly, discharge head and driver. The discharge head shall be designed to carry the entire weight of the bowl and column assembly along with the specified driver without excessive vibration or noise. All of the supplied equipment shall conform to this specification.

B. The required units shall be Gould's Water Technology Model 11CLC with 1 stage, or ENGINEER-approved equal.

1.2 QUALITY ASSURANCES

A. Warranty

The manufacturer shall warrant their pumps to be free of defects for a period of one year after the product is put into operation or eighteen months from the shipment date, whichever occurs first.

B. Certifications

1. The pump manufacturer shall be certified to the ISO 9001 standard for design and manufacture of vertical turbine pumps.
2. The manufacturer shall be capable of producing vertical turbine pumps certified to NSF/ANSI 61 & 372.
3. Pressure containing fabrications shall be welded only by those whom are qualified on ASME code section IX. Welder certification shall be provided with the submittal package.

C. Foundry

The manufacturer shall own and operate its own U.S. based foundry producing vertical turbine components.

D. Testing Standards

All vertical turbine pumps shall conform to ANSI/AWWA E101-88 and to the most current edition of Hydraulic Institute Standards.

1.3 SUBMITTALS

A. With the proposal, the contractor shall submit complete fabrication and assembly drawings together with detailed specifications covering materials, parts, devices, and accessories. The data and specifications for each pumping unit shall include, but not be limited to the following:

Name of Manufacturer
Type and Model
Design Rotational Speed
Number of Stages
Type of Bowl Bearings
Type of line shaft bearings
Size of Shafting
Size of Pump Column
Size of Discharge Outlet
OD of Pump Bowls
Weight

Type of Finish
Total Weight
Total Pump Length
Complete performance curves showing capacity versus head, NPSH required, efficiency, and BHP plotted scales consistent with performance requirements

PART 2 – PRODUCT SELECTION

2.1 MANUFACTURER

A. Goulds Water Technology, A Xylem Brand

B. The equipment covered by this specification shall be standard products as manufactured by Gould's Water Technology or an equivalent having a minimum of 20 years' experience in the production of such equipment. All pumps and pump components specified in this specification shall be supplied by a single pump manufacturer. The pump manufacturer shall be required to supply the pumps and drivers, and shall be responsible for their compatibility only.

C. A factory authorized service facility shall have trained service technicians and be able to show evidence of parts inventory for routine maintenance items such as bearings, gaskets, shafts, and sleeves.

2.2 OPERATION SELECTION

A. Stated total dynamic head (TDH) includes lift and all system pressure. Pump manufacturer shall include pump's internal loses.
1. Pump item number: VIT-DITM 11CLC
2. Number of required units: 1
3. Condition "A" (Design Point),
   Capacity, GPM: 600
   TDH, head in feet: 59
4. Condition "B" (On the Curve and Left of Design Point),
   Capacity, GPM: 580
   TDH, head in feet: 60
5. Condition "C" (On the Curve and Right of Design Point),
   Capacity, GPM: 620
   TDH, head in feet: 58
6. Condition "D" (Shutoff),
   Capacity, GPM: 165
   TDH, head in feet: 76.4
7. Condition "E" (Runout),
   Capacity, GPM: 902
   TDH, head in feet: 39
8. Driver horsepower: 15
9. Minimum bowl efficiency,
   Percent (design point): 82.3%
10. Maximum pump operating speed: 1770 RPM
11. Minimum column and discharge diameter, inches: 8
12. NPSHR not to exceed: 12.6

B. Condition "A" as listed above is the design point and will be used for any performance evaluation in accordance with the 1B grade standards of the Hydraulic Institute.

C. The pump horsepower requirements for any point on the curve shall not utilize the service factor nor exceed the motor nameplate horsepower rating.

2.3 SERVICE CONDITIONS

Liquid to be pumped: water
Pumping temperature (PT): 68
Specific gravity at PT: 1
Viscosity at PT: 1.0017
Vapor pressure at PT/max temp: 0.3393
Pumping Liquid pH: 7
Suction pressure: 25.7 PSI
Available liquid level from sump floor: 5’-6”
Site elevation: 98.86
Distance from bottom of Sub base to the bottom of sump:1’-0”

2.4 MATERIALS AND CONSTRUCTION

A. The vertical turbine lineshaft sump pump shall conform to the materials of construction for open lineshaft design. (Insert table from Xylem Online pump configuration, or review and edit applicable table below)

Sectional Type “VIT-DITM”

LINESHAFT, W/L, ‘A’ CAST or DUCTILE HEAD, THREADED COLUMN PACKING

DISCHARGE HEAD ASSEMBLY			
Description	**MC**	**Material Description**	**ASTM**
Headshaft	2227	SST 416	A582 S41600
Adjusting Nut	2130	Brass	B16C36000
Gib Key	2242	Steel 1018	A108 G10180
Slinger	5121	Rubber	3CA715A25 B14
Discharge Head	1003 or 1018	Cast Iron or Ductile iron	A48 CL30 or A536 Grade 65-45-12
Stuffing Box Bearing	1109	Bronze	B584 C90300
Stuffing Box	1003	Cast Iron	A48 CL30
Stuffing Box Gasket	5136	Acrylic Gasket	Garlock Blue Guard
Split Gland	1203	SST 316	A744 GR. CF-8M
Gland Adjusting Screw	2229	SST 316	A276 S31600
Packing	5026	Acrylic Yarn	Packmaster 2
Column Flange (CA only)	1003	Cast Iron	A48 CL30
COLUMN AND LINESHAFT ASSEMBLY			
Column Coupling	6501	Black Pipe	A53

DISCHARGE HEAD ASSEMBLY			
Description	**MC**	**Material Description**	**ASTM**
Column Pipe	6501	Black Pipe	A53
Lineshaft	2227	SST 416	A582 S41600
Bearing Retainer	2321	SST 304	A320
Lineshaft Bearing	5121	Rubber	3CA715A25 B14
Lineshaft Coupling	2265	SST 416	A582 S41600
BOWL ASSEMBLY			
Bowl Shaft	2227	SST 416	A582 S41600
Discharge Bowl	1003	Cast Iron	A48 CL30
Discharge Bearing	1109	Bronze	B584 C90300
Intermediate Bowl	6911	Coated Cast Iron	A48 CL30
Inter Bowl Bearing	1109	Bronze	B584 C90300
Impeller	1398	Bronze	B584 C87600
Impeller Taper Lock	2242	Steel 1018	A108 G10180
Wear Rings (optional)	1128	Bronze	B148 C95200
Hex Bolt	2298	Grade 8	SAE J429 GR8
Sand Collar	1205	SST 304	A744 S30400
Suction Bowl / Bell	1003	Cast Iron	A48 CL30
Suction Bearing	1109	Bronze	B584 C90300
Suction Strainer	6952	Galvanized Steel	A108 G10180
Plug	1046	Mal Iron	A197

B. Bowl Assembly

1. The suction bowl shall be designed to provide conservative entrance velocities and direct the flow to the first stage impeller. The inner surface of the suction bell shall be smooth and free of sharp projections which could cause turbulence or cavitation. The

suction casing shall be designed to house the suction bell bearing by means of four vanes.

2. The bowls shall be smooth and free of sharp projections and shall have register fits for alignment and be connected by flanged and bolted construction. Bowl sizes 6" to 15" shall be porcelain enameled on the bowl interior. Bowl sizes 16" and larger shall be epoxy-lined.
3. The impellers shall be machined and finished smooth to insure proper performance. They are to be balanced prior to assembly. The impellers shall be connected to the bowl shaft by means of collet design
4. The suction strainer shall be a clip-on basket design and have a free inlet area of at least 3-4 times the impeller eye area. The suction strainer shall be connected to the bowl assembly suction casing.

C. Column Assembly

1. The column shall include threaded connections and shall be of open design with product lubrication.
2. The bearing spacing shall be selected to insure operation at a minimum of 25% above or below the first critical speed. Bearing spacing shall not exceed 5 feet.
3. For 3"-12" product lubricated column assemblies, the column shall be designed with drop-in steel or cast-iron bearing retainers. The interior of the column shall be free of offsets, burrs, discontinuities and irregularities.
4. The lineshaft shall be of adequate size to transmit the full power of the pump without slip, excessive vibration or elongation, and shall have threaded joints. Lineshaft lengths shall not exceed 10 feet. The lineshaft shall have left hand threads that tighten during pump operation.

D. Discharge Head Assembly

1. For above ground service, the discharge head shall be fitted with a flanged discharge connection. The flange shall be a 250 LB F.F. ANSI flange for cast heads. The discharge head shall be designed to carry the entire weight of the complete pump and driver without distortion when spanning an opening of sufficient size to permit removal of the complete pump assembly. The discharge head shall be provided with a coupling guard. Lifting lugs shall be provided as standard.
2. The stuffing box shall be designed for 6 rings of packing and lantern ring. An extra-long bearing shall be located below the packing in the stuffing box. Packing lubrication leakage through the stuffing box shall be drained back to the sump. The packing gland shall be of a two-piece design.

E. Driver

1. The driver will be a VHS electric motor. The driver and any related equipment will ship unmounted from the pump to ship.

2.5 COATING

A. The bowl assembly exterior shall be coated with Goulds Water Technology Standard Blue Enamel.

B. The column assembly exterior shall be coated with Goulds Water Technology Standard Blue Enamel.

C. The head assembly exterior shall be coated with Goulds Water Technology Standard Blue Enamel.

D. For water flush configuration, tube assembly exterior shall be coated with Goulds Water Technology Standard Blue Enamel.

2.6 TESTING

A. All factory testing shall conform to the most current edition of the Hydraulic Institute Standards. All pump performance testing shall be performed at the manufacturer's facility. (Specify if there are any additional standards)

B. Performance testing shall be witnessed and performed on the fully assembled unit with job motor. The test shall cover seven points including the design point (HI 14.6). The design point shall be used for any performance evaluation.

C. Hydrostatic testing shall be witnessed in compliance with HI14.6. Hydro testing is to be performed on the pressure containing components. Certified test results shall be provided for record purposes for approval prior to shipment.

D. A standard 10 business days' notice shall be given to the engineer before starting any witness testing. The manufacturer shall not be responsible for expenses including, but not limited to travel, food, and lodging to observe all witness testing.

E. A written approval for all witness testing is required prior to release for shipment. All non-witness testing shall require written prior to release for shipment.

F. Field/functional testing will be performed by the contractor to insure proper mechanical operation at the jobsite. All testing data to be used for evaluation shall be performed at the pump manufacturer's facility.

G. Motor tests and test reports shall be provided as required in accordance with the motor specification.

PART 3 – EXECUTION

3.1 SHIPPING

A. Pumps that are less than 30 feet in length shall be shipped fully assembled with the driver and shaft seal unmounted. The discharge flange shall be protected with a wooden flange cover.

3.2 STORAGE, HANDLING, AND INSTALLATION

A. The skidded pump and related equipment shall be unloaded, stored, and installed in agreement with the Manufacturer's operation and installation manuals. If storage is planned to be longer than six months or in harsh environment, long term storage practices should be followed per the Manufacturer's operation and installation manuals.

3.3 START-UP FIELD SERVICES

A. The pump manufacturer shall include two days of start-up field services with the proposal for the purpose of supervising the start-up and instructions of proper maintenance and operations.

Service Provided By Factory Representative	Time on Site
Inspect and Approve Installation	½ Day
Supervise Initial Adjustment	½ Day
Supervise Field Run Test	½ Day
Instruct Owner in Proper Start-Up and O&M	½ Day

Additional time on site shall be billed at the rate deemed by the manufacturer.

END OF SECTION

DIVISION 12
FURNISHINGS
(NOT USED)

DIVISION 13
SPECIAL CONSTRUCTION
(NOT USED)

DIVISION 14
CONVEYING SYSTEMS
(NOT USED)

DIVISION 15
MECHANICAL

SECTION 15000 – PIPING, GENERAL

PART 1 – GENERAL

1.1 THE REQUIREMENT

A. Provide all piping systems indicated, complete and operable, in accordance with the Contract Documents.

B. The mechanical drawings define the general layout, configuration, routing, method of support, pipe size and pipe type. The mechanical drawings are **not** pipe construction or fabrication drawings. Details for construction shall be developed as necessary to construct all mechanical piping systems, to accommodate the specific equipment provided, and to provide all spools, spacers, adapters, and connectors for a complete and functional system.

1.3 SUBMITTALS

A. Submittals shall be furnished in accordance with Division 01 – General Requirements.

B. Shop Drawings shall contain the following information:

1. Drawings: Layout drawings including all necessary dimensions, details, pipe joints, fittings, specials, bolts and nuts, gaskets, valves, appurtenances, anchors, guides, and material lists. Fabrication drawings shall indicate all spool pieces, spacers, adapters, connectors, fittings and supports to accommodate the equipment and valves in a complete and functional system.

C. Certifications: All necessary certificates, test reports and affidavits of compliance shall be obtained.

1.3 OPERATION AND MAINTENANCE MANUAL

A. Provide six (6) hard copies plus one (1) electronic version in PDF format.

1.4 QUALITY ASSURANCE

A. Manufacturer and model shall be described on the Drawings or Engineer approved equal.

B. The manufacturer shall provide a 2-year equipment warranty.

1.5 SPARE PARTS

A. Spares shall be as requested by the ENGINEER. Payment for spares shall be made in accordance with the General Conditions.

B. A list of spare parts for each piece of equipment shall be obtained from the manufacturer and submitted at the same time as Shop Drawings. The name, address, and telephone number of the nearest distributor for each piece of equipment shall be furnished.

PART 2 – PRODUCTS

2.1 GENERAL

A. Extent of Work: Pipes, fittings and appurtenances shall be provided in accordance with the requirements of the applicable Sections of Division 15 – Mechanical and as indicated.

B. Pipe Supports: Pipes shall be adequately supported, restrained, and anchored in accordance with Section 15006 – Pipe Supports, and as indicated.

C. Pressure Rating: Piping systems shall be designed for the maximum expected pressure as indicated on the Piping Schedule.

D. Inspection: Pipe shall be subject to inspection at the place of manufacture. During the manufacture of the pipe, the ENGINEER shall be given access to all areas where

manufacturing is in progress and shall be permitted to make all inspections necessary to confirm compliance with requirements.

E. Tests: Except where otherwise indicated, materials used in the manufacture of the pipe shall be tested in accordance with the applicable specifications and standards. Welds shall be tested as indicated.

F. Welding Requirements: Welding procedures used to fabricate pipe shall be prequalified under the provisions of ANSI/AWS D1.1 - Structural Welding Code. Welding procedures shall be reviewed for longitudinal and girth or spiral welds for pipe cylinders, spigot and bell ring attachments, reinforcing plates and ring flange welds, and plates for lug connections.

G. Welder Qualifications: Welding shall be done by skilled welders and welding operators who have had adequate experience in the methods and materials to be used. Welders shall be qualified under the provisions of ANSI/AWS D1.1 by an independent local, approved testing agency not more than 6 months prior to commencing work on the pipeline. Machines and electrodes similar to those used in the WORK shall be used in qualification tests. Qualification testing of welders and materials used during testing are part of the WORK.

2.2 PIPE FLANGES

A. General: Flanges shall have flat faces and shall be attached with bolt holes straddling the vertical axis of the pipe unless otherwise indicated. Attachment of the flanges to the pipe shall conform to the applicable requirements of ANSI/AWWA C207. Flange faces shall be perpendicular to the axis of the adjoining pipe. Flanges for miscellaneous small pipes shall be in accordance with the standards indicated for these pipes.

B. Pressure Ratings:
   1. 150 psi or less: Flanges shall conform to either ANSI/AWWA C207 - Steel Pipe Flanges for Waterworks Service--Sizes 4-inch. Through 144-inch, Class D, or ANSI/ASME B16.5 - Pipe Flanges and Flanged Fittings, 150-lb class.
   2. 150 psi to 275 psi: Flanges shall conform to either ANSI/AWWA C207 Class E or Class F, or ANSI/ASME B16.5 150-lb class.
   3. 275 psi to 700 psi: Flanges shall conform to ANSI/ASME B16.5, 300-lb class.
   4. Selection based on test pressure: AWWA flanges shall not be exposed to test pressures greater than 125 percent of rated capacity. For higher test pressures, the next higher rated AWWA flange or an ANSI-rated flange shall be selected.

C. Blind Flanges: Blind flanges shall be in accordance with ANSI/AWWA C207, or as indicated for miscellaneous small pipes.

D. Flange Coating: Machined faces of metal blind flanges and pipe flanges shall be coated with a temporary rust-inhibitive coating to protect the metal until the installation is completed.

E. Flange Bolts: Studs and bolts shall extend through the nuts a minimum of ¼-inch. All-thread studs shall be used on all valve flange connections, where space restrictions preclude the use of regular bolts.

F. Insulating Flanges: Insulated flanges shall have bolt holes ¼-inch diameter greater than the bolt diameter.

G. Insulating Flange Sets: Insulating flange sets shall be provided where indicated. Each insulating flange set shall consist of an insulating gasket, insulating sleeves and washers and a steel washer. Insulating sleeves and washers shall be one piece when flange bolt diameter is 1½-inch or smaller and shall be made of acetal resin. For bolt diameters larger than 1½-inch, insulating sleeves and washers shall be 2-piece and shall be made of polyethylene or phenolic material. Steel washers shall be in accordance with ASTM A325

– Structural Bolts, Steel, Heat Treated, 120/105 ksi Minimum Tensile Strength. Insulating gaskets shall be full-face.

H. Flange Gaskets:
1. Gaskets for flanged joints used in general water and wastewater service shall be full-faced type, with material and thickness in accordance with ANSI/AWWA C207. Blind flanges shall have gaskets covering the entire inside face of the blind flange and shall be cemented to the blind flange. Ring gaskets shall not be permitted, unless otherwise indicated.
2. Gaskets for flanged joints used in chemicals, air, solvents, hydrocarbons, steam, chlorine, and other fluids shall be made of materials compatible with the service, pressure, and temperature.

2.3 THREADED INSULATING CONNECTIONS

A. General: Threaded insulating bushings, unions, or couplings, as appropriate, shall be used for joining threaded pipes of dissimilar metals and for piping systems where corrosion control and cathodic protection are involved.

B. Materials: Threaded insulating connections shall be of nylon, Teflon, polycarbonate, polyethylene, or other non-conductive materials, and shall have ratings and properties to suit the service and loading conditions.

2.4 MECHANICAL-TYPE COUPLINGS (GROOVED OR BANDED PIPE)

A. General: Cast mechanical-type couplings shall be provided where indicated. The couplings shall conform to the requirements of ANSI/AWWA C606 - Grooved and Shouldered Joints. Gaskets for mechanical-type couplings shall be compatible with the piping service and fluid utilized, in accordance with the coupling manufacturer's recommendations. The wall thickness of grooved piping shall conform with the coupling manufacturer's recommendations to suit the highest expected pressure. To avoid stress on equipment, equipment connections with mechanical-type couplings shall have rigid-grooved couplings or flexible type coupling with harness in sizes where rigid couplings are not available, unless thrust restraint is provided by other means. Mechanical-type couplings shall be bonded. The Subcontractor shall have the coupling manufacturer's service representative verify the correct choice and application of couplings and gaskets, and the workmanship, to assure a correct installation. To assure uniform and compatible piping components, all grooved fittings, couplings, and valves shall be from the same manufacturer.

2.5 SLEEVE-TYPE COUPLINGS

A. Construction: Sleeve-type couplings shall be provided where indicated, in accordance with ANSI/AWWA C219 - Standard for Bolted Sleeve-Type Couplings for Plain-End Pipe. Couplings shall be steel with steel bolts, without pipe stop. Couplings shall be of sizes to fit the pipe and fittings indicated. The middle ring shall be not less than ¼-inch thick or at least the same wall thickness as the pipe to which the coupling is connected. If the strength of the middle ring material is less than the strength of the pipe material, the thickness of the middle ring shall be increased to have the same strength as the pipe. The coupling shall be either 5 or 7 inches long for sizes up to and including 30 inches and 10 inches long for sizes greater than 30 inches, for standard steel couplings, and 16 inches long for long-sleeve couplings. The followers shall be single-piece contoured mill sections welded and cold-expanded as required for the middle rings, and of sufficient strength to accommodate the number of bolts necessary to obtain adequate gasket pressures without excessive rolling. The shape of the follower shall be of such design as to provide positive confinement of the gasket. Buried sleeve-type couplings shall be epoxy-coated at the factory as indicated.

B. Pipe Preparation: Where indicated, the ends of the pipe shall be prepared for flexible steel couplings. Plain ends for use with couplings shall be smooth and round for a distance of 12 inches from the ends of the pipe, with outside diameter not more than 1/64-inch smaller than the nominal outside diameter of the pipe. The middle ring shall be tested by cold-expanding a minimum of one percent beyond the yield point, to proof-test the weld to the strength of the parent metal. The weld of the middle ring shall be subjected to air test for porosity.

C. Gaskets

1. Gaskets for sleeve-type couplings shall be rubber-compound material that will not deteriorate from age or exposure to air under normal storage or use conditions. Gaskets for wastewater and sewerage applications shall be Buna "N," Grade 60, or equivalent suitable elastomer. The rubber in the gasket shall meet the following specifications:
   a. Color - Jet Black
   b. Surface - Non-blooming
   c. Durometer Hardness - 74 plus and minus 5
   d. Tensile Strength - 1000 psi Minimum
   e. Elongation - 175 percent Minimum
2. The gaskets shall be immune to attack by impurities normally found in water or wastewater. All gaskets shall meet the requirements of ASTM D2000 - Classification System for Rubber Products in Automotive Applications, AA709Z, meeting Suffix B13 Grade 3, except as noted above. Where sleeve couplings are used in water containing chloramine or other fluids, which attack rubber materials, gasket material shall be compatible with the piping service and fluid utilized.

D. Insulating Couplings: Where insulating couplings are required, both ends of the coupling shall have a wedge-shaped gasket which assembles over a rubber sleeve of an insulating compound in order to obtain insulation of all coupling metal parts from the pipe.

E. Restrained Joints: Sleeve-type couplings on pressure lines shall be harnessed unless thrust restraint is provided by other means. Harnesses shall be designed by the pipe manufacturer in accordance with Manual M11, or as indicated. Harness sets shall be designed for the maximum test pressure of the pipe in which they are installed. Where harness sets are installed near the suction and discharge of the pump, harness bolts shall have zero elongation to prevent misalignment of the pump imparted by the thrust within the piping system.

2.6 EXPANSION JOINTS

A. Piping subject to expansion and contraction shall be provided with sufficient means to compensate for such movement without exertion of undue forces to equipment or structures. This may be accomplished with expansion loops, bellow-type expansion joints or sliding-type expansion joints. Expansion joints shall be of stainless steel, monel, rubber, or other materials best suited for each individual service.

2.7 PIPE THREADS

A. Pipe threads shall be in accordance with ANSI/ASME B1.20.1 - Pipe Threads, General Purpose (inch), and be made up with Teflon tape unless otherwise indicated

2.8 EXECUTION

A. Lined Piping Systems: The lining manufacturer shall take full responsibility for the complete, final product and its application. Pipe ends and joints of lined pipes at screwed flanges shall be epoxy-coated to assure continuous protection.

B. Core Drilling: Where core drilling is required for pipes passing through existing concrete, core drilling locations shall be determined by radiograph of concrete construction to avoid damage to embedded raceways and reinforcing bars.

C. Cleanup: After completion of the WORK, cuttings, joining and wrapping materials, and other scattered debris shall be removed from the Site. The entire piping system shall be handed over in a clean and functional condition.

PART 3 – EXECUTION

3.1 SERVICES OF SUPPLIER

A. Inspection, Startup and Field Adjustment: An authorized service representative of the supplier shall visit the site for not less than 4 days (2 trips) to furnish the indicated services.

B. Instruction of OWNER'S Personnel: The authorized representative shall also furnish instruction of the OWNER'S personnel in separately scheduled sessions. One session shall be scheduled for Operations Personnel and another session for Maintenance Personnel unless the OWNER decides to combine the two. Each session will consist of at least 1 class hour and 1 field hour.

END OF SECTION

SECTION 15005 – PIPING IDENTIFICATION AND SIGNAGE SYSTEMS

PART 1 – GENERAL

1.1 THE REQUIREMENT

A. Provide safety signs and identification devices for all exposed piping and valves using color bands, lettering, flow direction arrows, and related permanent identification devices, and all appurtenant works, in accordance with the Contract Documents.

1.2 REFERENCE SPECIFICATIONS, CODES AND STANDARDS

A. Commercial Standards: ANSI A13.1 Scheme for the Identification of Piping Systems

1.3 SUBMITTALS

A. Submit samples of all types of identification devices and signs to be used in the work.

B. All submittals shall be in strict accordance with the requirements of Division 01 – General Requirements.

1.4 OPERATION AND MAINTENANCE MANUAL

A. Provide six (6) hard copies plus one (1) electronic version in PDF format.

1.5 QUALITY ASSURANCE

A. Manufacturer and model shall be described on the Drawings or Engineer approved equal.

B. The manufacturer shall provide a 2-year equipment warranty.

1.6 SPARE PARTS

A. Spares shall be as requested by the ENGINEER. Payment for spares shall be made in accordance with the General Conditions.

B. A list of spare parts for each piece of equipment shall be obtained from the manufacturer and submitted at the same time as Shop Drawings. The name, address and telephone number of the nearest distributor for each piece of equipment shall be furnished.

PART 2 – PRODUCTS

2.1 IDENTIFICATION OF PIPING

A. Identification of all exposed pipe shall be accomplished by color-coding with bands or painting of the pipe and by lettering as specified in Part 3, herein. Color bands shall either be painted directly upon the pipe or shall be pressure-sensitive adhesive-backed vinyl cloth or plastic tape.

B. Each pipe identification shall consist of two color-coded bands, a printed label identifying the name of the pipe, and a flow arrow to indicate direction of flow in the pipe. All labels shall be preprinted on pressure-sensitive adhesive-backed vinyl cloth or plastic tape. Arrows shall be die-cut of the same type of material as the labels. Arrows and labels may be stenciled on the pipes at the discretion of the Engineer.

C. Letter sizes and colors for lettering, arrows and background shall conform to ANSI A13.1.

2.2 IDENTIFICATION OF VALVES AND SHORT PIPE LENGTHS

A. Identifying devices for valves and the sections of pipe that are too short to be identified with color bands, lettered labels, and arrows shall be identified with metal or plastic tags as specified herein.

B. Metal tags shall be supplied with embossed lettering. Plastic tags shall be of solid black phenolic with white letters. All tags shall be designed to be attached, by chain, to the valves or short pipes.

2.3. SAFETY SIGNS

A. Color, legend, and layout shall conform to OSHA 1910.145 requirements.

B. “DANGER” Signs: Two-inch high white letters “Danger” in red oval surrounded by a rectangular black field. Text wording 1½-inch high black capital letters on white field.

C. “CAUTION” Signs: Two-inch high yellow letters on black field. Text wording 1½-inch high black capital letters on yellow field.

D. Chemical precaution signs:
   1. In accordance with ANSI Z129.1
   2. 12-inch x 14-inch
   3. Made to withstand most chemicals. Special ink for printing to be absorbed into sign surface. Ultraviolet inhibitors and clear face coating for resisting fading and scratching. Semi-rigid linear polyethylene.

PART 3 – EXECUTION

3.1 GENERAL

A. All labels and identification tags shall be installed in accordance with the manufacturer's printed instructions, and shall be neat and uniform in appearance. All such tags or labels shall be readily visible from all normal working locations.

3.2 VALVE TAGS

A. Valve tags shall be attached to the valve or structure by means of a chain.

3.3 PIPE IDENTIFICATION

A. Each pipe shall be identified at intervals of 30-feet, and at least one time in each room. Piping shall also be identified at a point approximately within 2-feet of all turns, elbows, valves and on the upstream side of all distribution fittings or branches.

B. Pipe identification shall consist of 2 elements, i.e., a lettered label, and a directional label.

END OF SECTION

SECTION 15006 - PIPE SUPPORTS

PART 1 – GENERAL

1.1 THE REQUIREMENT

A. Provide pipe supports, hangers, guides, and anchors, complete, in accordance with the Contract Documents.

1.2 SUBMITTALS

A. Submittals shall be in accordance with Division 01.

B. Shop Drawings shall include the following information:
   1. Drawings of pipe supports, hangers, anchors, and guides
   2. Calculations for special supports and anchors.

PART 2 – PRODUCTS

2.1 GENERAL REQUIREMENTS

A. Code Compliance: All piping systems and pipe connections to equipment shall be properly anchored and supported to prevent undue deflection, vibration, dislocation due to line pressures, and stresses on piping, equipment, and structures. All supports and parts thereof shall conform to the requirements of ANSI/ASME B31.1 - Power Piping, except as supplemented or modified below. Supports for plumbing piping shall be in accordance with the latest edition of the applicable plumbing code or local administration requirements.

B. Structural Members: Wherever possible, pipes shall be supported from structural members. Where it is necessary to frame structural members between existing members, such supplementary members shall be provided. All supplementary members shall be in accordance with the requirements of the building code and the American Institute of Steel Construction.

C. Pipe Hangers: Pipe hangers shall be capable of supporting the pipe in all conditions of operation, allowing free expansion and contraction of the piping, and preventing excessive stress on equipment. All hangers shall have a means of vertical adjustment after erection. Hangers shall be designed to prevent becoming disengaged by any movement of the supported pipe. Hangers subject to shock or thrust imposed by the actuation of safety valves, shall include hydraulic shock suppressors. All hanger rods shall be subject to tensile loading only.

D. Hangers Subject to Horizontal Movements: At hanger locations where lateral or axial movement is anticipated, suitable linkage shall be provided to permit such movement. Where horizontal pipe movement is greater than 1/2-inch, or where the hanger rod deflection from the vertical is greater than 4 degrees from the cold to the hot position of the pipe, the hanger rod and structural attachment shall be offset in such a manner that the rod is vertical in the hot position.

E. Spring-Type Hangers: Spring-type pipe hangers shall be provided for piping subject to vibration or vertical expansion and contraction, such as engine exhausts and similar piping. All spring-type hangers shall be sized to the manufacturer's printed recommendations and the loading conditions encountered. Variable spring supports shall be provided with means to limit misalignment, buckling, eccentric loading, or to prevent overstressing of the spring, and with means to indicate at all times the compression of the spring. Supports shall be capable of accommodating at least 4 times the maximum travel due to thermal expansion.

F. Thermal Expansion: Wherever expansion and contraction of piping is expected, a sufficient number of expansion loops or joints shall be provided, together with the necessary rolling or sliding supports, anchors, guides, pivots, and restraints permitting the piping to expand and contract freely in directions away from the anchored points. All components shall be structurally suitable to withstand all loads imposed.

G. Heat Transmission: Supports, hangers, anchors, and guides shall be so designed and insulated, that excessive heat will not be transmitted to the structure or to other equipment.

H. Riser Supports: Where practical, risers shall be supported on each floor with riser clamps and lugs, independent of the connected horizontal piping.

I. Freestanding Piping: Free-standing pipe connections to equipment such as chemical feeders and pumps shall be firmly attached to steel frames fabricated from angles, channels, or I-beams anchored to the structure. Exterior, free-standing overhead piping shall be supported on fabricated pipe stands consisting of pipe columns anchored to concrete footings, with horizontal, welded steel angles and U-bolts or clamps securing the pipes.

J. Materials of Construction:
   1. General: All pipe support assemblies, including framing, hardware, and anchors, shall be steel construction, galvanized after fabrication, unless otherwise indicated.
   2. Submerged Supports: All submerged piping, as well as piping, conduits, and equipment in hydraulic structures within 24 inches of the water level, shall be supported with support, assemblies, including framing, hardware, and anchors, constructed of Type 304 stainless steel, unless otherwise indicated.

K. Point Loads: Any meters, valves, heavy equipment, and other point loads on PVC, FRP, and other plastic pipes, shall be supported on both sides, according to manufacturer's recommendations to avoid undue pipe stresses and failures. To avoid point loads, all supports on PVC, FRP, and other plastic piping shall be equipped with extra wide pipe saddles or galvanized steel shields.

L. Noise Reduction: To reduce transmission of noise in piping systems, all copper tubes in buildings and structures shall be wrapped with a 2-inch-wide strip of rubber fabric or similar, suitable material at each pipe support, bracket, clip, or hanger.

2.2 SUPPORT SPACING

A. Supports for piping with the longitudinal axis in approximately a horizontal position shall be spaced to prevent excessive sag, bending, and shear stresses in the piping, with special consideration given where components such as flanges and valves impose concentrated loads. Pipe support spacing shall not exceed the maximum spans in the tables below. For temperatures other than ambient temperatures, or those listed, and for other piping materials or wall thicknesses, the pipe support spacings shall be modified in accordance with the pipe manufacturer's recommendations. Vertical supports shall be provided to prevent the pipe from being overstressed from the combination of all loading effects.
   1. Support Spacing for Schedule 40 and Schedule 80 Steel Pipe:

Nominal Pipe Diameter (inches)	Maximum Span (feet)
½	6
¾ and 1	8
1¼ to 2	10
3	12
4	14

Nominal Pipe Diameter (inches)	Maximum Span (feet)
6	17
8 and 10	19
12 and 14	23
16 and 18	25
20 and greater	30

2. Support Spacing for Welded Fabricated Steel Pipe:
   The support spacing shall be designed so that the stress on the pipe does not exceed 5,000 psi. Maximum deflection of pipe shall be limited to 1/360th of the span and shall be calculated by using the formula:

$$L = (7500tD/(32t+D))^{1/2}$$

where: t = Thickness (inches)

D = Diameter (inches)

L = Maximum span (feet)

3. Support Spacing for Ductile-Iron Pipe:

Nominal Pipe Diameter (inches)	Maximum Span (feet)
All Diameters	Two supports per pipe length or 10 feet (one of the 2 supports located at joint)

4. Support Spacing for Copper Tubing:

Nominal Pipe Diameter (inches)	Maximum Span (feet)
½ to 1½	6
2 to 4	10
6 and greater	12

5. Support Spacing for Schedule 40 or 80 PVC Pipe:

Nominal Pipe Diameter (inches)	Maximum Span (at 100 degrees F) (feet)
½	4
3/4	4.5
1	5
1¼	5.5
1½	5.75
2	6.25
3	7.5
4	8.25
6	10
8	11
10	12.25
12	13.25

2.3 MANUFACTURED SUPPORTS

A. Stock Parts: Where not specifically indicated, designs which are generally accepted as exemplifying good engineering practice and use stock or production parts, shall be utilized wherever possible. Such parts shall be locally available, new, of best commercial quality, designed and rated for the intended purpose.

B. Manufacturers, or Equal:
   1. TELCO Inc.
   2. Bergen-Paterson Pipesupport Corp., Woburn, MA;
   3. Grinnell Corp. (Supply Sales Company), Cranston, RI;
   4. NPS Products, Inc., Westborough, MA;
   5. Power Piping Company, Pittsburgh, PA.

2.4 COATING

A. Galvanizing: Unless otherwise indicated, all fabricated pipe supports other than stainless steel or non-ferrous supports shall be blast-cleaned after fabrication and hot-dip galvanized in accordance with ASTM A123 - Specifications for Zinc (Hot-Dip Galvanized) Coatings on Iron and Steel Products.

B. Other Coatings: Other than stainless steel or non-ferrous supports, all supports shall receive protective coatings.

PART 3 – EXECUTION

3.1 INSTALLATION

A. General: All pipe supports, hangers, brackets, anchors, guides and inserts shall be fabricated and installed in accordance with the manufacturer's printed instructions and ANSI/ASME B31.1 - Power Piping. All concrete inserts for pipe hangers and supports shall be coordinated with the formwork.

B. Appearance: Pipe supports and hangers shall be positioned to produce an orderly, neat piping system. All hanger rods shall be vertical, without offsets, unless noted otherwise. Hangers shall be adjusted to line up groups of pipes at the proper grade for drainage and venting, as close to ceilings or roofs as possible, without interference with other work.

3.2 FABRICATION

A. Quality Control: Pipe hangers and supports shall be fabricated and installed by experienced welders and fitters, using the best welding procedures available. Fabricated supports shall be neat in appearance without sharp corners, burrs, and edges.

END OF SECTION

SECTION 15071 – PLASTIC PIPE AND TUBING

PART 1 – GENERAL

1.1 THE REQUIREMENT

A. Furnish and install polyvinyl chloride, chlorinated polyvinyl chloride, polyethylene, and polypropylene pipe and fittings in accordance with the Contract Documents.

1.2 PIPE DESIGNATIONS

The following plastic pipe designations are defined:

Designation	Definition
PVC	Polyvinyl Chloride
CPVC	Chlorinated polyvinyl chloride
PE	Polyethylene
PP	Polyproylene

1.3 SUBMITTALS

A. Submittals shall be furnished in accordance with Division 01.

B. Submit materials list and catalogue data sheets naming each product to be used identified by manufacturer and type number.

1.4 QUALITY ASSURANCE REFERENCES

A. This section contains references to some or all of the following documents, most recent edition. They are a part of this section as specified and modified. In case of conflict between the requirements of this section and those of the listed documents, the requirements of this section shall prevail.

Reference	Title
ASTM D1248	Polyethylene Plastics Molding and Extrusion Materials
ASTM D1784	Rigid Polyvinyl Chloride (PVC) Compounds and Chlorinated Poly (Vinyl Chloride) (CPVC) Compounds
ASTM D1785	Polyvinyl Chloride (PVC) Plastic Pipe, Schedules 40, 80, and 120
ASTM D2241	Polyvinyl Chloride (PVC) Pressure-Rated Pipe (SDR series)
ASTM D2464	Threaded Polyvinyl Chloride (PVC) Plastic Pipe Fittings, Schedule 80
ASTM D2466	Polyvinyl Chloride (PVC) Plastic Pipe Fittings, Schedule 40
ASTM D2467	Socket-Type Polyvinyl Chloride (PVC) Plastic Pipe Fittings, Schedule 80
ASTM D2564	Solvent Cements for Polyvinyl Chloride (PVC) Plastic Pipe and Fittings
ASTM D3034	Type PSM Polyvinyl Chloride (PVC) Sewer Pipe and Fittings
ASTM D4101	Propylene Plastic Injection and Extrusion Materials
ASTM F402	Practice for Safe Handling of Solvent Cements and Primers used for Joining Thermoplastic Pipe and Fittings
ASTM F437	Threaded Chlorinated Polyvinyl Chloride (CPVC) Plastic Pipe Fittings, Schedule 80
ASTM F438	Socket-Type Chlorinated Polyvinyl Chloride (CPVC) Plastic Pipe Fittings, Schedule 40
ASTM F439	Socket-Type Chlorinated Polyvinyl Chloride (CPVC) Plastic Pipe Fittings, Schedule 80
ASTM F441	Chlorinated Polyvinyl Chloride (CPVC) Plastic Pipe, Schedules 40 and 80
ASTM F477	Elastomeric Seals (Gaskets) for Joining Plastic Pipe
ASTM F493	Solvent Cements for Chlorinated Polyvinyl Chloride (CPVC) Plastic Pipe and Fittings

PART 2 – PRODUCTS

2.1 PVC PIPE

A. General: PVC materials for pipe and fittings shall conform to ASTM D1784, Cell Classification 12454-B. Pipe and fitting materials shall be specially formulated with sufficient UV protection additives to provide for long term outdoor exposure with no deleterious effects. Flanges shall be one-piece solid design or two-part van stone type which utilize the tapered, serrated face and full face gasket technique for joining and are compatible with ANSIN16.5 Class 150 metal flanges. Unions shall be the O-ring type having interchangeable components with true union valves for maximum system versatility.

B. Schedule 40, 80, and 120: Pipe in accordance with ASTM D1785. Schedule 80 PVC socket type fittings shall conform to ASTM D2467. Schedule 40 PVC fittings shall conform to ASTM D2466. PVC solvent weld cement for socket connections shall meet the requirement of ASTM D2564/ Schedule 80 PVC threaded fittings shall conform to ASTM D2464.

C. C900: Pipe shall meet the requirements of AWWA C900, “Polyvinyl Chloride (PVC) Pressure Pipe.” All Class 200 pipe shall meet the requirements of DR 25, Class 150 pipe shall meet the requirements of DR 18 and Class 200 the requirements of DR 14. All pipe shall be suitable for use as pressure conduit. Provisions must be made for expansion and contraction as each joint with an elastomeric ring. The bell shall consist of an integral wall section with a locked-in, solid cross section elastomeric ring which meets the requirements of ASTM F477. The bell section shall be designed to be at least as hydrostatically strong as the pipe wall and meet the requirements of AWWA C900. Fittings shall be ductile iron, push-on or mechanical joint.

D. C905: Pipe shall meet the requirements of AWWA C905, “Polyvinyl Chloride (PVC) Water Transmission Pipe” Class 165. Pipe shall meet the requirements of DR 25. All pipe shall be suitable for use as pressure conduit and shall be cast iron pipe OD. Provisions must be made for expansion and contraction at each joint with an elastomeric ring. The bell shall consist of an integral wall section with a locked-in, solid cross section elastomeric ring which meets the requirements of ASTM F477. The bell section shall be designed to be at least as hydrostatically strong as the pipe wall. Fittings shall be ductile iron, push-on or mechanical joint, as specified in AWWA C907 PVC fittings.

2.2 POLYETHYLENE TUBING

A. Polyethylene tubing shall be extruded from high molecular weight resins and conform with ASTM D148 Type 1, Class A, Category 4, Grade E5. Stress crack resistance shall be per ASTM D1693. Tubing shall have a minimum working pressure of 150 psi. Fittings shall be polyethylene or polyvinylidene fluoride (PVDF) and shall be compression type. No hose shanks will be allowed.

PART 3 – EXECUTION

3.1 INSTALLATION OF PIPE AND FITTINGS

A. General: In accordance with manufacturer’s recommendations.

B. Pipe and fittings shall be of the sizes indicated. Clean pipe interior of all foreign matter before installing. Pipe shall be square cut with fine tooth saw or other cutter or knife designed for use with plastic pipe. Remove burrs by smoothing edges with a knife, file, or sandpaper. Replace any section of pipe found to be defective or damaged with new acceptable pipe. Handle pipe carefully to prevent gouging or scratching. Any length of pipe have a gouge, scratch, or other permanent indentation more than 10 percent of the wall thickness in depth shall be rejected.

3.2 INSTALLATION OF SOLVENT WELD JOINT TYPE PIPE

A. In accordance with the recommendations of the pipe manufacturer and the following supplementary requirements:

1. Do not solvent weld joints if it is raining, if atmospheric temperature is below 40°F or above 90°F, if the pipe is exposed to direct sunlight.
2. Test fit dry pipe and fittings before applying cement. Pipe should enter socket without forcing at least one-third but not more than two-thirds the depth of socket. Fittings that are looser or tighter shall not be used. Thoroughly clean and dry the pipe end and socket of fitting with methyl, ethyl, ketone, acetone, or similar cleaner. Apply cement evenly to outside surface and end of pipe and inside surface of socket. Avoid excess application of cement but insure complete coverage of all bonding surfaces. Mark depth of socket on pipe to guide application of cement and insure full insertion of pipe. Insert pipe in socket, twisting pipe or fitting approximately ½ turn as pipe is being seated in socket. Make sure pipe is fully seated providing a bond between end of pipe and shoulder of socket. Immediately wipe excess cement from pipe leaving no more than a 1/8-inch fillet at fitting end. Hold assembled joint in place for approximately 15 seconds and allow to set for 30 minutes before moving. Avoid rough handling for 48 hours. Longer periods may be required in cold or wet weather.

3.3 INSTALLATION OF PUSH-ON JOINT TYPE PIPE

A. Clean gaskets and seats of foreign materials prior to joint assembly. Apply lubricant as recommended by the pipe manufacturer. Carefully insert the spigot end into the bell to prevent entry of dirt and incorrect entry angle. With suitable fork tool, crowbar, or by hand, make the joint to the insertion depth recommended by the manufacturer. When the selected pipe uses joints not designed for full depth insertion, prevent further closure of previously completed joints by restraining movement of the installed line while making succeeding joints.

3.4 INSTALLATION OF TUBING

A. Carefully slip tubing inside of PVC conduits without kinking or damaging the tubing. Tubing shall be continuous between boxes and equipment. No joints shall be allowed in conduits. Tubing shall be tested for 72 hours with no visible leaks.

END OF SECTION

SECTION 15170 – PUMP ROOM MECHANICAL PIPING

PART 1 – GENERAL

1.1 WORK INCLUDED

A. Work Included

1. Provide pump room mechanical piping as indicated on the Drawings for filtration and circulation systems, chemical control systems, and all appurtenances. This section shall be applied to the pump room area.
2. Furnish and install domestic water system from points of connection within pool equipment area to make-up water system, hose bibs and miscellaneous items as required.
3. Furnish and install filter backwash system to point of connection with sanitary sewer within pool equipment area as required.
4. Furnish and install natural gas piping to pool heater from point of connections within pool equipment area as required.

1.2 QUALITY ASSURANCE

A. All Work of this Section shall be performed by the pump room Contractor/Subcontractor.

B. Qualifications of Workers/Work

1. Employ only experienced, competent, and properly equipped workers on Project.
2. Use only new materials in perfect condition. Inspect all materials and immediately remove defective items from the Project Site.

C. Standards

1. Work shall be performed in accordance with the applicable editions of all National, State and local codes, laws, regulations and ordinances, including the following:

   American National Standards Institute (ANSI)

   American Society for Testing Materials (ASTM)

   American Waterworks Association (AWWA)

   American Welding Society
2. Do not construe anything in the Drawings or Specifications to permit Work not conforming to these requirements.

1.3 SUBMITTALS

Provide submittals and substitutions in accordance with Division 01 – General Requirements.

1.4 PRODUCT HANDLING

A. Protection: Use means necessary to protect the swimming pool mechanical piping items before, during and after installation and to protect the installed Work of other trades.

B. Replacements: In the event of damage, immediately make all repairs and replacements necessary to the approval of the Engineer and at no additional cost to the Owner.

1.5 JOB CONDITIONS

Cooperation: Cooperate with other trades in coordinating their respective Work, so that no conflict of new construction or occupied space may occur. Should any installation Work be done without such craft coordination, that Work so installed shall be removed and re-installed.

PART 2 – PRODUCTS

2.1 PRODUCT QUALITY

Materials and equipment shall be new, of the best quality for the purpose intended, and shall be clearly marked with the manufacturer's name and nameplate data or stamp and rating. As far as practicable, materials and equipment shall be of one manufacturer.

2.2 PIPE AND FITTINGS

A. PVC Schedule 40: Type 1, normal impact, NSF approved for solvent welding applications, ASTM Specification D1785, color shall be white. Dura, Lasco.

B. PVC Schedule 80: Type 1, normal impact, NSF approved for solvent welding applications, ASTM Specification D1785, color shall be gray. Dura, Lasco.

C. CPVC Schedule 40: NSF approved for solvent welding applications, ASTM Specification D1784, working temperature of 200°F. Dura, Lasco.

D. DWV Schedule 40: Type 1, normal impact, NSF approved for solvent welding applications, ASTM Specification D1785, color shall be white. Dura, Lasco.

2.3 VALVES

A. Ball Valve: 150 PSI PVC body, thermoplastic valve and Teflon coated stainless steel stem, EPDM seat material, on 1-1/2” to 4” pipe lines. Per Techno

B. Check Valve: 150 PSI PVC body, thermoplastic disc and Teflon coated stainless steel stem, EPDM seat material, furnish hand wheel/gear operators on all valves 6" and larger. Per Techno.

C. Water Level Control System: Electronic type to connect to electrical system, 115 volt and 24VAC solenoid valve installed per plan.

2.4 PRESSURE GAUGES

A. 4-1/2" dial, bottom connection, chrome ring and shut-off cock. Ranges shall be selected to indicate between mid-point and two-thirds of maximum range under design conditions. Per REOTEMP.

2.5 PIPE HANGERS AND SUPPORTS

A. General

1. Support all pipe line individually with hangers, each branch having at least one hanger. Lateral brace as noted and required.
2. Support piping near floor with steel stanchions welded to end plates secured to pipe and floor.
3. Support vertical piping at each floor level. Install coupling in piping at each support. Coupling shall rest on and transmit load to support. Isolate copper from steel supports with vinyl electrician's tape around pipe and coupling.
4. Use Stoneman "Trisolator," Unistrut, or approved equal, isolators at each hanger and other support points on bare copper tubing system.
5. For PVC pipe, space hangers four (4) feet apart for pipe sizes 1" and under, five (5) feet apart for pipe sizes 1-1/4" to 2", and six (6) feet apart for pipe sizes over 2". Space hangers for horizontal pipes at a maximum of six (6) feet for copper 2" and smaller and for steel 1-1/4" and smaller; ten (10) feet for copper 2-1/2" and larger and for steel 1-1/2" and larger.
6. Size hanger rods, screws, bolts, nuts, etc., according to manufacturer's sizing charts.
7. Trapeze hangers may be used for parallel lines.
8. Use galvanized or cadmium plated hangers, attachments, rods, nuts, bolts, and other accessories in pool mechanical room, high humidity areas, or where exposed to

weather. Hot dip galvanize all items which are not factory furnished. Plating for hinged movements must be done at the factory.

9. Lateral Bracing: To prevent swaying of the piping systems, provide angle iron bracing and anchor into wall or overhead framing. Piping shall be braced or anchored in such a way as to resist a horizontal force of 50% of its operating weight in any direction.
10. Do not use wire or other makeshift devices for hangers.

2.6 SLEEVES AND WATERSTOPS

A. Provide sleeves where work of this Section passes through fire rated partitions, floors and ceilings, concrete slabs or exterior of structure. Caulk clearance space using sealant appropriate for application in conformance with manufacturer's recommendations and Title 24 of Colorado Code of Regulations. 3M, Dow Corning. In lieu of sleeves and caulking, "Link Seal" products may be used.

B. Provide prefabricated waterstops as indicated on the Drawings at all pipe penetrations through structures containing stored water (i.e., swimming pools, balance/surge tanks, etc.) to insure leak-proof seals.

2.7 JOINTS

A. PVC / CPVC : PVC / CPVC pipe shall be joined using solvent welded PVC / CPVC couplings joints, unless otherwise noted. PVC / CPVC fittings shall be solvent welded.

B. Differing materials: Joints between different materials shall be flanged, unless otherwise noted. All flanges shall be Van Stone (2 piece).

C. Special Joints: Special joints shall be as noted on the drawings.

PART 3 – EXECUTION

3.1 SURFACE CONDITIONS

A. Inspection
1. Prior to Work of this Section, carefully inspect the installed Work of other trades and verify that such work is complete to the point where this installation may properly commence.
2. Verify that items of this Section may be installed in accordance with the original design and referenced standards.

B. Discrepancies
1. In the event of discrepancy, immediately notify the Engineer and Owner.
2. Do not proceed with installation in areas of discrepancy until all such discrepancies have been fully resolved.
3. Failure to notify the Engineer and Owner, and give written notice of discrepancies shall constitute acceptance by the Contractor of existing conditions as fit and proper to receive his work.

3.2 ABBREVIATIONS AND SYMBOLS

A. Abbreviations and symbols on the Drawings are those most commonly used. Obtain clarification from the Engineer on any questionable items before bid.

3.3 GENERAL PIPING REQUIREMENTS

A. Size any section of pipe for which size is not indicated or any intermediate section erroneously shown undersized the same size as the largest pipe connecting to it. Sizes listed are nominal.

B. Cut pipe accurately to job measurements and install without springing or forcing, true to line and grade, generally square with building and/or structures and adequately supported to prevent undue stress on pipe, fittings and accessories.

C. Make changes of direction with manufactured fittings. Street ells, bushings, reducing flanges, close nipples or bending of pipe is not allowed.

D. Use great care to install piping in accordance with best practice. Plastic pipe shall be "snaked" in trenches to allow for thermal expansion.

E. All above grade, below grade and buried or imbedded PVC shall be installed using solvent weld fittings. Also, each and every fitting and pipe end shall be prepared with solvent primer. Fittings shall be joined individually and with enough time between assembly of adjacent joints to allow them to seal solidly. After joining, an even ring of primer must be visible around the entire fitting. If any fittings are installed without visible primer, the fitting shall be removed and discarded and piping recut, rechamfered, and joint made up again using a new fitting. All procedures, methods and techniques used to make up solvent weld joints shall be in strict accordance with manufacturer's recommendations.

F. Arrange pipe and hangers to allow for expansion, contraction and structural settlement. No pipe shall contact structure except penetrations as shown on the Drawings.

G. Provide dielectric connections between copper and dissimilar metals. In copper systems, threaded piping including connections to equipment shall be brass pipe and fittings. Install dielectric connections in vertical sections of piping only.

H. Run pipe full size through shut-off valves, balancing valves, etc. Change pipe size within three (3) pipe diameters of final connection to control valves, fixtures and other equipment.

I. Provide unions or flanges at connections to equipment, on service side of valves and elsewhere as required to facilitate ease of maintenance.

J. Locate equipment shut-off valves as close to equipment as possible maintaining easy valve access.

K. Make all connections between domestic water systems and equipment or face piping with approved backflow prevention devices as required.

3.4 TRENCH EXCAVATION AND BACKFILL

A. Excavation
   1. Excavate and backfill trenches as required for the Work of this Section.
   2. The Contractor shall perform all excavation of every description and of whatever materials encountered, to the depths indicated on the Drawings or as necessary. The Contractor shall dispose of the excavated materials not required or suitable for backfill as directed, and shall perform such grading as may be necessary to prevent surface water from flowing into the trenches. The Contractor shall provide adequate equipment for the removal of storm or subsurface waters which may accumulate in the excavated areas.

B. Trenching
   1. Excavate trenches to lines and grades as indicated on the Drawings and with banks as nearly vertical as practicable.
   2. Bottoms of trenches shall be accurately graded to provide uniform bearing on undisturbed soil for the entire length of each section of pipe.
   3. The width of the trench at and below the top of the pipe shall be such that the clear space between the barrel of the pipe and the trench wall shall not exceed 8" on either side of the pipe. The width of trench above the top of pipe may be wider if necessary.
   4. Over-depth excavations shall be filled with tamped sand to required grades.

5. Excavations of 5 feet or more in depth shall be shored or supported in conformance with rules, and regulations of State and Federal Governments. Shoring shall be constructed, maintained and removed in a manner to prevent caving of the excavation walls or other load on the pipe.

C. Backfilling

1. Material for backfilling of pipes shall be approved granular material less than 2" in diameter obtained from the excavation. No material of a perishable, spongy or otherwise unsuitable nature shall be used as backfill.
2. Backfilling of pipe trenches shall commence immediately after installation and testing to preclude damage to the installed pipe. Backfill around pipe shall be carefully placed so as not to displace or damage the pipe, and shall be carried up symmetrically on each side of the pipe to one foot above the top of the pipe. The material shall be carefully compacted or consolidated before additional backfill is placed.
3. Backfill above an elevation of one foot above the top of pipe. Material for balance of backfill shall be approved granular material less than 6" in diameter taken from the excavation.
4. Unless otherwise indicated on the Drawings, all pipe shall have a minimum of 18" of cover.

3.5 GENERAL EQUIPMENT REQUIREMENTS

A. Position equipment to result in good appearance and easy access to all components for maintenance and repairs.

B. Install piping, flues, breeching and ducts so that they do not interfere with equipment access.

C. Install level, secure and out of moisture. Provide shims, anchors, support straps, angles, grouted bases, or other items as required to accomplish proper installation.

D. All screws, nuts, bolts and washers shall be galvanized, cadmium plated or stainless steel. After fabrication, hot-dip galvanize unfinished ferrous items for outdoor, below grade or other use subject to moisture.

E. Extend 1/2" Schedule 40 black steel pipe lubrication tubes from all hard-to-reach locations to front of equipment or to access points. Terminate with proper type of lubrication fitting.

3.6 VALVES AND STRAINERS

A. If no shut-off is indicated, provide gate valves at inlet connections and balance valves at outlet connections to fixtures and equipment. Provide proper valve trim for service intended.

B. Use no solder end valves unless noted otherwise; provide adapters in copper tubing systems.

C. Locate valves with stems above horizontal plane of pipe. In general, locate valves within six (6) feet of floor, out from under equipment, in accessible locations with adequate clearance around hand wheels or levers for easy operation.

D. Provide all valves, cocks and strainers, full pipe size unless indicated otherwise.

E. Provide hand wheel operators on all valves 6" and larger, under 6" lever operators may be used.

3.7 IDENTIFICATION OF PIPING

A. Identify each valve by a numbered brass tag with hole and brass chain mounted on valve stem or handle. Tag to be a minimum of 1-1/2" in diameter and numbers at least 1/4" high stamped into tag.

B. Install an identification chart in a plastic or glass framed enclosure which schematically illustrates the proper operation of all piping systems and indicates number and location of all valves and control devices within the system.

3.8 TESTS

A. Perform tests in presence of Owner and Engineer with no pressure loss or noticeable leaks.

B. Do not include valves and equipment in tests. Include connection to previously tested sections if systems are tested in sections.

C. Perform tests as follows:

System	Test Pressure	Test Medium	Duration
Pool Piping	50 psig	Water	4 hours
Domestic Water	150 psig	Water	4 hours
Gas Piping	50 psig	Air	4 hours

All concrete anchor blocks shall be allowed to cure a sufficient time to develop adequate thrust resistance prior to testing and the pipeline shall not be tested until it has been filled with water for a minimum or 24 hours. Before testing, the pipe shall be backfilled with 2 1/2 feet of material or center loaded to hold the pipe in place while testing. The water necessary to maintain this pressure shall be measured through a meter. Any noticeable leaks shall be stopped and any defective pipe shall be replaced with new sections prior to commencing with the test.

The test shall be made prior to connecting the new line with the existing pipes and main. The test shall further be conducted with the open ends of pipe, valves and fittings suitably closed. Valves shall not be operated during the testing procure.

D. Field testing Procedure:

The test shall be conducted in the following manner. All air shall be expelled from the pipe. To accomplish this, if air valves or other outlets are not available, taps shall be made at the high points to expel the air and these taps shall be tightly plugged afterwards. The pressure in the pipeline shall then be pumped up to the specified test pressure. When the test pressure in the line has dropped to 10 PSI, at which time the pressure shall again be pumped up to the specified test pressure. This procedure shall be repeated until four hours have elapsed from the time the specified test pressure was first applied. At the end of the four-hour period, the pressure shall be pumped up to the test pressure for the last time.

E. Leakage allowance:

The leakage shall be considered as the total amount of water pumped into the pipeline during the four-hour period including the amount required to reach the test pressure for the final time. Leakage shall not exceed the rate of 24 gallons per inch of diameter, per mile, per 24 hours.

The following table indicates the leakage allowance for various size pipe and is equal to the number of gallons per the four-hour test period per 1,000 feet of pipe being tested:

Leakage Allowances
Gallons Per Four Hours per 1,000 Feet of Pipe

Pipe Size (Inches)	Test Pressure (PSI)	Allowable Leakage (Gallons)
1	50	.8
1 1/2	50	1.2

2	50	1.5
2 1/2	50	1.9
3	50	2.3
4	50	3.0
6	50	4.6
8	50	6.0
10	50	7.6
12	50	9.0
15	50	11.4
18	50	13.6
21	50	16.0
24	50	18.2
27	50	20.4

Any noticeable leak shall be stopped and all defective pipe, fittings, valves and other accessories discovered in consequence of the test shall be removed and replaced by the Contractor with sound material. The test shall then be repeated until the total leakage during a test of four hours duration does not exceed the rate specified above. All testing shall be inspected by the Owner's representative.

3.9 PIPE MATERIAL APPLICATION

A. PVC Schedule 40: Below grade pool piping and domestic water piping up to 12"-line size; use standard solvent weld fittings.

B. PVC Schedule 80: Above grade pool piping up to 12"-line size; use flanged Schedule 80 or epoxy coated cast iron fittings or standard solvent weld fittings per plans.

C. DWV Schedule 40: Gravity line backwash pipe.

D. Schedule 40 Steel: Natural gas piping.

E. CPVC: Above grade pool heater piping.

3.10 CUTTING AND DRILLING

Cutting or drilling necessary for installation of Work of this Section shall be done only with Engineer's approval.

3.11 CLOSING-IN OF UNINSPECTED WORK

Do not cover or enclose Work before testing and inspection. Re-open Work prematurely closed and restore all Work damaged.

3.12 QUIETNESS

Quietness is a requirement. Eliminate noise, other than that caused by specified equipment operating at optimum conditions, as directed by Engineer and Owner.

3.13 FLUSHING OF LINES

Flush or blow out pipes free from foreign substances before installing valves, stops or making final connections. Clean piping systems of dirt and dust prior to initial start-up.

3.14 CLEAN-UP

A. After all Work has been tested and approved, the Contractor shall thoroughly clean all parts of the equipment installations. Exposed parts shall be cleaned of cement, plaster and other materials and all grease and oil spots removed with solvent.

B. The Contractor shall remove debris from the Project site. Cartons, boxes, packing crates and excess materials not used, occasioned by this work shall be disposed of to the satisfaction of the Owner and Engineer.

C. If the above requirements of clean-up are not performed to the satisfaction of the Owner and Engineer, the Owner reserves the right to order the work done, the cost of which shall be borne by the Contractor.

END OF SECTION

SECTION 15183 – GAUGES

PART 1 – GENERAL

1.1 THE REQUIREMENT

A. Provide pressure and vacuum gauges as specified, complete, including all fittings, snubbers, connections, gaskets, supports, and accessories in the locations shown or specified, in accordance with the Contract Documents.

PART 2 – PRODUCTS

2.1 PRESSURE AND VACUUM GAUGES

A. General: Pressure gauges shall be provided on suction and discharge connections to pumps, as specified under pumps; on discharge connections from blowers and compressors; each side of pressure reducing valves; and where shown. Vacuum gauges shall be provided for vacuum pumps and where shown. In all locations (such as certain pump suction connections) where pressures may vary from below to above atmospheric head, compound gauges shall be installed.

B. Gauge Construction: Gauges shall be industrial quality liquid filled steel movement and stainless steel or alloy case. Unless otherwise shown or specified, gauges shall have a 2-1/2-inch dial, 1/4-inch threaded connection, a snubber adapter, and a shut-off valve. Gauges shall be calibrated to read in applicable units, with an accuracy of plus and minus 1 percent, to 150 percent of the working pressure or vacuum of the pipe or vessel to which they are connected. All gauges shall be vibration and shock resistant.

C. Gauge Manufacturers, or Equal:
   1. Marsh Instrument Company;
   2. Ashcroft Industrial Instruments (Dresser);
   3. Wika, Inc.;
   4. Marshalltown Instruments, Inc.;
   5. U.S. Gauge Div. of Ametek.

D. Snubber Manufacturers or Equal:
   1. Cajon Company;
   2. Weksler Instruments, Corp.

PART 3 – EXECUTION

3.1 INSTALLATION

A. All gauges shall be installed with the face in the vertical position, at the locations shown in the Contract Documents, and in strict accordance with the manufacturer's printed instructions. Care shall be taken to minimize the effect of water hammer or vibrations on the gauges. In extreme cases, the gauges may have to be mounted independently, with flexible connectors.

END OF SECTION

SECTION 15200 - VALVES, GENERAL

PART 1 – GENERAL

1.1 THE REQUIREMENT

A. Furnish and install all valves, actuators, and appurtenances, complete and operable, in accordance with the Contract Documents.

B. The provisions of this Section shall apply to all valves and valve actuators except where otherwise indicated. Valves and actuators in particular locations may require a combination of units, sensors, limit switches, and controls indicated in other Sections of the Specifications.

C. Where a valve is to be supported by means other than the piping to which it is attached, the CONTRACTOR shall obtain from the valve manufacturer a design for support and foundation. The design, including drawings and calculations sealed by an engineer, shall be submitted with the Shop Drawings. When the design is approved, the support shall be provided.

D. Unit Responsibility: A single manufacturer shall be made responsible for coordination of design, assembly, testing, and furnishing of each valve; however, the CONTRACTOR shall be responsible for compliance with the requirements of each valve section. Unless indicated otherwise, the responsible manufacturer shall be the manufacturer of the valve.

E. Single Manufacturer: Where two or more valves of the same type and size are required, the valves shall be furnished by the same manufacturer.

1.2 SUBMITTALS

A. General: Submittals shall be furnished in accordance with Division 01.

B. Shop Drawings: Shop Drawings shall contain the following information:
   1. Valve name, size, Cv factor, pressure rating and identification number (if any).
   2. Complete information on valve actuator, including size, Manufacturer, model number, limit switches, and mounting.
   3. Cavitation limits for all control valves.
   4. Assembly drawings showing part nomenclature, materials, dimensions, weights, and relationships of valve handles, handwheels, position indicators, limit switches, integral control systems, needle valves, and control systems.

C. Technical Manual: The Technical Manual shall contain the required information for each valve.

D. Spare Parts List: A Spare Parts List shall contain the required information for each valve assembly, where indicated.

1.3 QUALITY ASSURANCE

A. Valve manufacturer and model shall be as described in the Drawings or Engineer approved equal.

1.4 QUALITY ASSURANCE

A. Valve manufacturer and model shall be as described in the Drawings or Engineer approved equal.

1.5 SPARE PARTS

A. The CONTRACTOR shall furnish the required spare parts suitably packaged and labeled with the valve name, location, and identification number. The CONTRACTOR shall also furnish the name, address, and telephone number of the nearest distributor for the spare

parts of each valve. Spare parts are intended for use by the OWNER after expiration of the correction of defects period.

PART 2 – PRODUCTS

2.1 PRODUCTS

A. General: Valves and gates shall be new and of current manufacture. Shut-off valves 6-inches and larger shall have actuators with position indicators. Buried valves shall be provided with valve boxes and covers containing position indicators and valve extensions. Manual shut-off valves mounted higher than 7-feet above working level shall be provided with chain actuators.

B. Valve Labeling: A label shall be provided on all shut-off valves and control valves except for hose bibs. The label shall be of 1/16-inch plastic or steel, minimum 2 inches by 4 inches in size, and shall by permanently attached to the valve or on the wall adjacent to the valve as directed by the ENGINEER.

C. Valve Testing: As a minimum, unless otherwise indicated or recommended by the ENGINEER, valves 3 inches in diameter and smaller shall be tested in accordance with manufacturer's standard and 4 inches in diameter and larger shall be factory tested as follows:

1. Hydrostatic Testing: Valve bodies shall be subjected to internal hydrostatic pressure equivalent to twice the water rated pressure of the valve. Metallic valves rating pressures shall be at 100°F and plastic valves shall be 73°F, or at higher temperature according to type of material. During the hydrostatic test, there shall be no leakage through the valve body, end joints, or shaft seals, nor shall any part of the valve be permanently deformed. The duration shall be sufficient time to allow visual examination for leakage. Test duration shall be at least 10 minutes.
2. Seat Testing: Valves shall be tested for leaks in the closed position with the pressure differential across the seat equal to the water rated pressure of the valve. The duration of test shall be sufficient time to allow visual examination for leakage. Test duration shall be at least 10 minutes. Leakage past the closed valve shall not exceed 1 fluid ounce per hour per inch diameter for metal seated valves and drop-tight for resilient seated valves.
3. Performance Testing: All valves shall be shop operated from fully closed to fully open position and reverse under no-flow conditions in order to demonstrate the valve assembly operates properly.

D. Valve Marking: Valve bodies shall be permanently marked in accordance with MSS SP25 - Standard Marking Systems for Valves, Fittings, Flanges, and Unions.

2.2 MATERIALS

A. General: Materials shall be suitable for the intended application. Materials not indicated shall be high-grade standard commercial quality, free from defects and imperfections that might affect the serviceability of the product for the purpose for which it is intended. Unless otherwise indicated, valve and actuator bodies shall conform to the following requirements:

1. Cast Iron: Close-grained gray cast iron, conforming to ASTM A48 - Gray Iron Castings, Class 30, or to ASTM A126 - Gray Iron Castings for Valves, Flanges and Pipe Fittings.
2. Ductile Iron: ASTM A536 - Ductile Iron Castings, or to ASTM A395 - Ferritic Ductile Iron Pressure-Retaining Castings for Use at Elevated Temperatures.
3. Steel: ASTM A216 - Steel Castings, Carbon Suitable for Fusion Welding for High-Temperature Service, or to ASTM A515 - Pressure Vessel Plates, Carbon Steel, for Intermediate- and Higher-Temperature Service.
4. Bronze: ASTM B62 - Composition Bronze or Ounce Metal Castings, and valve stems not subject to dezincification shall conform to ASTM B584 - Copper Alloy Sand Castings for General Applications.

5. Stainless Steel: Stainless steel valve and operator bodies and trim shall conform to ASTM A351 - Steel Castings, Austenitic, for High-Temperature Service, Grade CF8M, or shall be Type 304 or 316 stainless steel.
6. PVC: Poly Vinyl Chloride materials for valve body, flanges, and cover shall conform to Cell Classification 12454.
7. CPVC: Chlorinated Poly Vinyl Chloride materials for valve body, flanges, and cover shall conform to Cell Classification 23447.
8. NSF Standard 14: All materials shall be listed for use in contact with potable water.

B. Bodies: Valve bodies shall be cast, molded (in the case of plastic valves), forged, or welded of the materials indicated, with smooth interior passages. Wall thicknesses shall be uniform in agreement with the applicable standards for each type of valve, without casting defects, pinholes, or other defects that could weaken the body. Welds on welded bodies shall be done by certified welders and shall be ground smooth. Valve ends shall be as indicated, and be rated for the maximum temperature and pressure to which the valve will be subjected.

C. Bonnets: Valve bonnets shall be clamped, screwed, or flanged to the body and shall be of the same material, temperature, and pressure rating as the body. The bonnets shall have provision for the stem seal with the necessary glands, packing nuts, or yokes.

D. Stems: Valve stems shall be of the materials indicated, or, if not indicated, of the best commercial material for the specific service, with variable stem packing, O-rings, Chevron V-type packing, or other suitable seal. Where subject to dezincification, bronze valve stems shall conform to ASTM B62, containing not more than 5 percent of zinc or more than 2 percent of aluminum, with a minimum tensile strength of 30,000 psi, a minimum yield strength of 14,000 psi, and an elongation of at least 10 percent in 2 inches. Where dezincification is not a problem, bronze conforming to ASTM B584 may be used, except that zinc content shall not exceed 16 percent.

E. Stem Guides: Stem guides shall be provided, spaced 10-feet on centers unless the manufacturer can demonstrate by calculation that a different spacing is acceptable. Submerged stem guides shall be 304 stainless-steel.

F. Internal Parts: Internal parts and valve trim shall be as indicated for each individual valve. Where not indicated, valve trim shall be of Type 316 stainless steel or other best suited material.

G. Coatings: Valve coatings shall be as recommended by the valve manufacturer.

H. Environment: Submerged valves shall be of stainless-steel construction as recommended by the valve manufacturer or as approved by the ENGINEER.

2.3 VALVE ACCESSORIES

A. Valves shall be furnished complete with the accessories required to provide a functional system.

PART 3 – EXECUTION

3.1 VALVE INSTALLATION

A. General: Valves, actuating units, stem extensions, valve boxes, and accessories shall be installed in accordance with the Manufacturer's written instructions and as indicated. Gates shall be adequately braced to prevent warpage and bending under the intended use. Valves shall be firmly supported to avoid undue stresses on the pipe.

B. Access: Valves shall be installed with easy access for actuation, removal, and maintenance and to avoid interference between valve actuators and structural members, handrails, or other equipment.

C. Valve Accessories: Where combinations of valves, sensors, switches, and controls are indicated, the CONTRACTOR shall properly assemble and install such items so that systems are compatible and operating properly. The relationship between interrelated items shall be clearly noted on Shop Drawing submittals.

END OF SECTION

SECTION 15203 – CHECK VALVES

PART 1 – GENERAL

1.1 THE REQUIREMENT

A. Provide check valves and appurtenances, complete and operable, in accordance with the Contract Documents.

1.2 SUBMITTALS

A. Furnish submittals in accordance with the Contract Documents.

PART 2 – PRODUCTS

2.1 SWING CHECK VALVES (3-INCH AND LARGER)

A. General: Swing check valves for water service shall be of the outside lever and spring type, in accordance with ANSI/AWWA C 508 - Swing-Check Valves for Waterworks Service, 2 in. through 24 in. NPS, unless otherwise indicated, with full-opening passages, designed for a water-working pressure of 150 psi. They shall have a flanged cover piece to provide access to the disc.

B. Body: The valve body and cover shall be of cast iron conforming to ASTM A126 - Gray Iron Castings for Valves, Flanges, and Pipe Fittings, with flanged ends conforming to ANSI/ASME B16.1 - Cast Iron Pipe Flanges and Flanged Fittings, Class 25, 125, 250, and 800, or mechanical joint ends, as indicated.

C. Disc: The valve disc shall be of cast iron, ductile iron, or bronze conforming to ASTM B62 - Composition Bronze or Ounce Metal Castings.

D. Seat and Rings: The valve seat and rings shall be of bronze to conforming ASTM B62 or B148 - Aluminum-Bronze Castings, or of Buna-N.

E. Hinge Pin: The hinge pin shall be of bronze or stainless steel.

F. Valve manufacturer shall be as shown on the Drawings or Engineer approved equal.

2.2 SWING CHECK VALVES (2-1/2-INCH AND SMALLER)

A. General: Swing check valves for steam, water, oil, or gas in sizes 2-1/2-inch and smaller shall be suitable for a steam pressure of 150 psi and a cold-water pressure of 300 psi. They shall have screwed ends, unless otherwise indicated, and screwed caps.

B. Body: The valve body and cap shall be of bronze conforming to ASTM B 61 - Steam or Valve Bronze Castings, or ASTM B62 with threaded ends conforming to ANSI/ASME B1.20.1 - Pipe Threads, General Purpose (inch).

C. Disc: Valves for steam service shall have bronze or brass discs conforming to ASTM B16 - Free-Cutting Brass Rod, Bar, and Shapes for Use in Screw Machines, and for cold water, oil, and gas service replaceable composition discs.

D. Hinge Pin: The hinge pins shall be of bronze or stainless steel.

E. Valve manufacturer shall be as shown on the Drawings or Engineer approved equal.

2.3 SLANTING DISC CHECK VALVES

A. General: Slanting disc check valves for water service shall have a seating angle of approximately 55 degrees. Valves shall have replaceable seat rings and disc rings. The water passage cross-sectional area shall be equal to the full pipe area. Valves shall have sufficient clearance around the pivot pins to permit free seating of the disc without binding and shall be guaranteed not to stick in the closed position. All slanting disc check valves

shall have position indicators and two flanged connections for attachment of dashpots or hydraulic snubbers. The valves shall be designed for a water working pressure of 150 psi, unless otherwise indicated.

B. Body: The valve body shall be of cast iron conforming to ASTM A48-Gray Iron Castings for Valves, Flanges, and Pipe Fittings or A 126, Class B, with flanged ends conforming to ANSI/ASME B 16.1, Class 125, unless otherwise indicated.

C. Disc: The valve disc shall be designed with an "aerofoil" configuration of cast iron or ductile iron, with bronze seating face, except for valves 10 inches or smaller, which may have solid bronze or aluminum bronze discs. The disc shall be partially balanced with a short travel, to resist slamming.

D. Seat Ring: The seat ring shall be of centrifugally cast bronze, aluminum bronze, or stainless steel, with beveled edges, firmly clamped or screwed into the valve body.

E. Pins: The pivot pins and bushings shall be of stainless steel, bronze, or aluminum bronze, to allow free movement of the disc without binding.

F. Valve manufacturer shall be as shown on the Drawings or Engineer approved equal.

PART 3 – EXECUTION

3.1 GENERAL

A. Valves shall be installed in accordance with provisions of Section 15200 – Valves, General.

END OF SECTION

SECTION 15207 – BALL VALVES

PART 1 – GENERAL

1.1 THE REQUIREMENT

A. Provide ball valves and appurtenances, complete and operable, in accordance with the Contract Documents.

1.2 SUBMITTALS

A. Furnish submittals in accordance with Contract Documents.

PART 2 – PRODUCTS

2.1 GENERAL

A. Buried valves shall be of the inside screw, non-rising stem type. The valve actuators shall be as indicated, with counter-clockwise opening stems, in accordance with Section 15201 – Valve and Gate Actuators.

2.2 BALL VALVES (SMALLER THAN 3-INCH)

A. Construction: Ball valves, smaller than 3-inch, for general purpose use, shall be heavy-duty type for industrial service, with butt weld, grooved, threaded, or soldered ends to match the piping. The bodies shall be cast red bronze conforming to ASTM B584. The ball and threaded pack gland shall be brass with a reinforced PTFE seat ring. The stem shall be of silicon bronze. All valves shall have a pressure rating of minimum 125 psi steam, and 200 psi coldwater, unless otherwise indicated.

B. Construction (Thermoplastic Ball Valves – Chemical Service Valves): PVC and CPVC ball valves, smaller than 3-inch, for general purpose use, shall be heavy-duty type for industrial service, with butt socket, threaded, or flanged ends to match the piping. The ball valves shall be true union type constructed from PVC Type I, ASTM D1784, or CPVC Type IV, ASTM D1784. All O-rings shall be EPDM or Viton. All ½” to 2” valves shall be pressure rated at 235 psi and all 2-1/2” to 3” valves shall be pressure rated at 150 psi, unless otherwise indicated.

C. Manufacturers, or Equal:
   1. Nibco, Apollo (general purpose)
   2. Asahi and Spears (plastic – general or chemical use)

PART 3 – EXECUTION

3.1 GENERAL

A. Ball valves shall be installed in accordance with the provisions of Section 15200 – Valves, General. Care shall be taken that valves in plastic lines are well supported at each end of the valve.

END OF SECTION

SECTION 15230 – MISCELLANEOUS VALVES

PART 1 – GENERAL

1.1 THE REQUIREMENT

A. Provide all miscellaneous valves and appurtenances, complete and operable, in accordance with the Contract Documents.

1.2 SUBMITTALS

A. Furnish submittals in accordance with the Contract Documents

1.3 OPERATION AND MAINTENANCE MANUAL

A. Provide six (6) hard copies plus one (1) electronic version in PDF format.

1.4 QUALITY ASSURANCE

A. Manufacturer and model shall be described on the Drawings or Engineer approved equal.

B. The manufacturer shall provide a 2-year equipment warranty.

1.5 SPARE PARTS

A. Spares shall be as requested by the ENGINEER. Payment for spares shall be made in accordance with the General Conditions.

B. A list of spare parts for each piece of equipment shall be obtained from the manufacturer and submitted at the same time as Shop Drawings. The name, address, and telephone number of the nearest distributor for each piece of equipment shall be furnished.

PART 2 - PRODUCTS

2.1 AIR-VACUUM AND AIR-RELEASE VALVES

A. Air and Vacuum Valves: Air and vacuum valves shall be capable of venting large quantities of air while pipelines are being filled, and allowing air to re-enter while pipelines are being drained. They shall be of the size indicated, with flanged or screwed ends to match piping. Bodies shall be of high-strength cast iron. The float, seat, and all moving parts shall be constructed of Type 316 stainless steel. Seat washers and gaskets shall be of a material insuring water tightness with a minimum of maintenance. Valves shall be designed for minimum 150 psi water-working pressure, unless otherwise indicated.

B. Air-Release Valves: Air-release valves shall vent accumulating air while system is in service and under pressure and be of the size indicated and shall meet the same general requirements as indicated for air and vacuum valves except that the vacuum feature will not be required. Valves shall be designed for a minimum water-working pressure of 150 psi, unless otherwise indicated.

C. Combination Air Valves: Combination air valves shall combine the characteristics of air and vacuum valves and air release valves by exhausting accumulated air in systems under pressure and releasing or re-admitting large quantities of air while a system is being filled or drained, respectively. Valves shall have the same general requirements as indicated for air and vacuum valves.

2.2 BACKFLOW PREVENTER VALVES

A. General: Backflow preventers shall work on the reduced pressure principle. They shall consist of 2 spring-loaded check valves, automatic differential pressure relief valve, drain valves, and shut-off valves. The body material shall be bronze or cast iron for a working pressure of not less than 150 psi, with bronze or stainless-steel trim. Drain lines with air

gaps shall be provided. The backflow preventer valves shall be in accordance with AWWA C511 standard, and approved with the City of Stockton Standards.

2.3 FABRICATED ALUMINUM SLIDE GATES.

A. GENERAL

1. The slide gate shall be self-contained type and be manufactured in compliance with AWWA C562.
2. Materials of construction shall be per the table below

Component	Materials
Frames, Rails, Cover Slides, Yokes	Aluminum B-209 and B-211 Alloy 6061 T-6
Fasteners and Anchor Bolts	316 stainless per ASTM F593 and 594
Stems	Stainless Steel – ASTM A276, 316 SS
Flush Bottom Seals	Rubber – ASTM D2000 BC 615/625 Grade BE 625
Seats	Ultra High Molecular Weight Polyethylene (UHMW)
Finish	Mill finish on all aluminum and stainless-steel surfaces

3. Gate Schedule

Equipment Number	Gate Size (inches)	Gate Type	Opening Direction	Bottom Seating	Design Head (feet)		Operator Type
					Seating	Unseating	
On 48-inch EQ Line	48x48	Wall Mounted, Self-Contained,	Upward	Flush bottom	15	15	Rising stem with lockable handwheel and floor stand

B. Frames and Guides

1. The gate frame shall be rigid unit composed of aluminum guide rails with UHMW seats upstream and downstream. These shall form a tight seal between the frame and the slide (disc). This tight seal shall provide an allowable leakage rate of no more than 0.1 gallons per minute per peripheral foot of perimeter opening for seating heads and 0.1 GPM per peripheral foot for unseating heads. Stainless steel retainer bars, cross bars and head rails shall be provided. The clear opening shall be the same size as the waterway unless otherwise noted. The guides will be of sufficient length to support two-thirds of the height of the slide when in the fully open position.

C. Slide Cover (Disc)

1. The slide cover (disc) shall be aluminum plate reinforced with structural shapes welded to the plate. The slide cover shall not deflect more than 1/720th of the span of the gate under the maximum head. The stem connection shall be either the clevis type, with structural members welded to the slide and the bolt to act as a pivot pin, or a threaded and bolted thrust nut supported in a welded nut pocket. The clevis or pocket and yoke of the gate shall be capable of taking, without damage, at least twice the rated thrust output of the operator at 40 pounds pull.

D. Flush bottom Closure

1. Gates shall be furnished with a flush seal arrangement. A resilient seal with a minimum width of exposed face of ¾" shall be securely attached to the frame along the invert, and shall extend to the depth of the guide groove.

E. Manufacturers

1. Waterman Model A-250 or equal.

PART 2 – EXECUTION

2.1 INSTALLATION

A. Backflow preventers shall be installed in potable water lines where required by applicable codes or regulations, and wherever there is any danger of contamination, and where indicated.

B. Valves shall be installed in accordance with the manufacturer's printed recommendations.

C. Backflow preventers, as well as air and vacuum release valves, shall have piped outlets to the nearest acceptable drain, firmly supported, and installed in such a way as to avoid splashing and wetting of floors and obstruction of traffic.

PART 3 – EXECUTION (NOT USED)

END OF SECTION

SECTION 15410 – PLUMBING AND PIPING SYSTEMS

PART 1 – GENERAL

1.1 THE REQUIREMENT

A. Furnish all building drainage and vent piping, cleanouts and access panels, floor drains, hot and cold-water piping, valves, piping specialties and appurtenances, supports and anchors, and plumbing and piping insulation in accordance with the Contract Documents.

1.2 SUBMITTALS

A. Furnish submittals in accordance with the Contract Documents.

B. Product data to be submitted:
   1. Materials list of items proposed to be provided under this Section.
   2. Manufacturer's specifications, catalog cuts, and other data needed to prove compliance with the specified requirements.
   3. Shop Drawings and other data as required to indicate method of installing and attaching equipment, except where such details are fully shown on the Drawings.

C. Sterilization Certificate: Upon completion of water line sterilization, deliver to the Engineer two copies of an acceptable "Certificate of Performance" for that activity.

D. Cathodic Protection:
   1. Upon completion of the work of this Section, deliver to the Engineer sufficient data to prove that wrapping of steel piping has been tested and meets the specified requirements.
   2. Show date of inspection, voltages used, and name and address of the inspector.

1.3 QUALITY ASSURANCE

A. Use adequate numbers of skilled workmen who are thoroughly trained and experience in the necessary crafts and who are completely familiar with the specified requirements and the methods needed for proper performance of the work of this Section.

B. Codes and Regulations:
   1. In additions to complying with the specified requirements, comply with pertinent regulations of governmental agencies having jurisdiction.
   2. In the event of conflict between or among specified requirements and pertinent regulations, the more stringent requirement will govern when so directed by the Engineer.
   3. Plumbing Code Compliance: Comply with applicable portions of the California Plumbing Code pertaining to selection and installation of plumbing materials and products.

PART 2 – MATERIALS

2.1 PIPE MATERIALS

A. Provide pipes and pipe fittings complying with Division 15 – Mechanical and in accordance with the following listings:

B. Cast Iron Soil Pipe and Fittings:
   1. Service weight cast iron conforming to ASTM A74, hubless type, asphalitic coated.
   2. Joints shall be made with cast iron mechanical couplings or stainless steel sleeves with neoprene gaskets.

C. Galvanized or Black Steel Pipe:

1. 3 inches and Smaller – ASTM A120. Schedule 40, black or hot-dipped galvanized, welded, or seamless steel pipe, threaded or coupled.
2. 4 inches and Larger – ASTM A53. Grade A or B, Schedule 40, black or hot dipped galvanized, welded, or seamless steel pipe, threaded.
3. Fittings: FS WW-P521, 150 psi, malleable iron. Black or hot dipped galvanized ASTM A153.
4. Unions: FS WW-U-531, Type B, black or hot dipped galvanized, Class 2, 250 psi, malleable iron, ground joint and brass seat.
5. Sealing Paste or Tape: Teflon.
6. Corrosion Protective Wrap: Polyvinyl chloride or Polyethylene pressure sensitive tape, 20-mil nominal thickness (one layer 20 mil or two layers 10 mil).
7. Primer: 3M “Scotchwrap Pipe Primer.”

D. Copper Pipe and Fittings:
1. Pipe: Underground, ANSI/ASTM B88, Type K, hard temper, seamless water tube. Aboveground, ANSI/ASTM B88, Type L., hard drawn, seamless water tube.
2. Fittings: ANSI/ASME B16.22. wrought copper or brass solder-joint fittings.
3. Solder: Lead-free, silver tin-antimony solder 95-5, or tin-silver solder 96.5-3.5, 95.5, or 94-6, with mildly corrosive liquid or petroleum-based past flux containing chlorides of zinc and ammonium.

E. ABS: (Acrylonitrile Butadiene Styrene) plastic, drain, waste and vent pipe.
1. Pipe and Fittings: ASTM D2661; ASTM F628; CSA B181.1.
2. Solvent Cement: As recommended by the pipe manufacturer.

F. Polypropylene Drain, Waste and Vent Pipe:
1. Flame retardant polypropylene material conforming to ASTM D2146 and flammability based on ASTM D635.
2. Pipe shall be produced to Schedule 40 Iron Pipe size dimensional standards, including wall thickness.
3. Fitting design shall be based upon the laying length dimensions in ANSI B16-12 for case iron screwed drainage fittings. Fitting wall thicknesses shall be measured in accordance with ASTM D2122, Section 4, and interval diameters shall be measured in accordance with ASTM D2122, Section 7.
4. In concealed locations, joints shall be made by the electrical fusion method. In exposed or easily accessible locations, mechanical joint polypropylene fittings and joints may be used.
5. Pipe and fittings shall be equal to GSR Fuseal, manufactured by R & G Sloane Co., 7660 North Clybourn Avenue, Sun Valley, CA, or equal

G. Polyvinyl Chloride (PVC):
1. General: PVC materials for pipe and fittings shall conform to ASTM D1784, Cell Classification 12454-B. Pipe and fitting materials shall be specially formulated with sufficient UV protection additives to provide for long term outdoor exposure with no deleterious effects. Flanges shall be one-piece solid design or two-part van stone type which utilize the tapered, serrated face and full-face gasket technique for joining and are compatible with ANSIN16.5 Class 150 metal flanges. Unions shall be the O-ring type having interchangeable components with true union valves for maximum system versatility.
2. Schedule 40, 80, and 120: Pipe in accordance with ASTM D1785. Schedule 80 PVC socket type fittings shall conform to ASTM D2467. Schedule 40 PVC fittings shall conform to ASTM D2466. PVC solvent weld cement for socket connections shall meet the requirement of ASTM D2564/ Schedule 80 PVC threaded fittings shall conform to ASTM D2464.

2.2 FLOOR DRAINS (FD)

A. 4” Zurn EZ1 PVC, or equal. Drains shall each include a Jay R. Smith Quad Close Trap Seal.

2.3 TRENCH DRAINS

A. Trench Drain Channels:
   1. Trench drain channels shall be formed by creating a slope in the cast-in-place floor. See Mechanical Details for installation details.
   2. A shelf/ledge shall also be formed allowing for installation of HDG grating bearing on ledge and sitting flush with the floor.

2.4 FLASHING

A. Where pipe of this Section passes through the roof, flash with Semco No. 1100-4 seamless 4 lbs. flashing, with steel reinforced “Vari-Pitch” boot and cast iron counterflashing sleeve or ENGINEER-approved equal.

2.5 PIPE HANGERS

A. Water Piping:
   1. Split ring hangers with supporting rods, Grinnel Fig. 108; Elcen Fig. 10, or ENGINEER-approved equal.
   2. Semco “trisolators” or ENGINEER-approved equal.

B. Soil and Waste Piping:
   1. Variable ring hangers with supporting rods, Grinnel Fig. 108; Elcen 10, or equal.
   2. Riser clamps at each floor and as required, Grinnell Fig. 261; Elcen Fig. 39 or equal.

C. Gas Piping: Split ring hangers with supporting rods, Grinnel Fig. 108; Elcen Fig. 10, or equal.

2.6 PIPE INSULATION

A. Hot and Cold Water (Exposed to Freezing Conditions): Molded fiberglass insulation jacketed with PVC jacketing. Provide .016 mil embossed aluminum weather protective jacket for outdoor application. Insulation 2-inch thick for pipe sizes less than 6-inch. Flame spread rating of 25 or less and smoke developed ratings of 50 or less per ASTM E84-89a. Manville “Micro-Lok AP”; Owens/Corning Fiberglass “SSL-11,” or equal.

2.7 CLEANOUTS

A. Exterior:
   1. Concrete walk areas: Jonespec No. 63230-GP; Smith No. 4293 with 4910, or equal.
   2. All other areas: Jonespec No. 60010-QS; Smith No. 4293, or equal with pre-cast concrete box as detailed in Drawings.

B. Floors: Jonespec No. 61000; Smith No. 4023, or equal.

C. Finished Walls: Round chrome plated or stainless-steel access plate and screw, Jonespec No. 63150; Smith No. 4532, or equal.

2.8 OTHER MATERIALS

A. Provide other materials, not specifically described but required for a complete and proper installation, subject to the approval of the Engineer.

PART 3 – EXECUTION

3.1 SURFACE CONDITIONS

A. Examine the areas and conditions under which work of this Section will be performed. Correct conditions detrimental to timely and proper completion of the Work. Do not proceed until unsatisfactory conditions are connected.

3.2 PLUMBING SYSTEM LAYOUT

A. Lay out the plumbing system in careful coordination with the Drawings, determining proper elevations for all components of the system and using only the minimum number of bends to produce a satisfactorily functioning system.

B. Follow the general layout shown on the Drawings (where other work may interfere, consult with engineer).

C. Lay out pipes to fall within partition, wall, or roof cavities, and to not require furring other than as shown on the Drawings.

3.3 TRENCHING AND BACKFILLING

A. Perform trenching and backfilling associated with the work of this Section in strict accordance with the provisions of the geotechnical report in appendix A.

B. Cut bottom of trenches to grade. Make trenches 12-inch wider than the greatest dimension of the pipe.

C. Bedding and Backfilling:
   1. Install piping promptly after trenching. Keep trenches open as short a time as practicable.
   2. Under the building, install pipes on a 6-inch bed of damp sand. Backfill the bottom of slab with damp sand.
   3. Outside of the building, install underground piping on a 6-inch bed of damp sand. Backfill to within 12-inch of finish grade with damp sand. Backfill remainder with native soil.
   4. Don not backfill until installation has been approved and until Project Record Documents have been properly annotated.

3.4 PIPE SCHEDULE: Pipe sizes, schedule, and material to be installed per Drawings.

A. Interior and Exterior Water Piping and Compressed Air Piping:
   1. Pipe: Underground, ANSI/ASTM B88, Type K, hard temper, seamless copper water tube. Aboveground, ANSI/ASTM B88, Type L, hard drawn, seamless copper water tube.
   2. Fittings: ANSI/ASME B16.22, wrought copper or brass solder joint fittings.
   3. Solder: Lead-free, tin-antimony solder 95-5, or tin-silver solder 96.5-3.5, 95.5-5 or 94-6.

B. Above Ground Building Drain Piping:
   1. Sizes 3-Inch and Smaller: PVC Schedule 40/80 or standard weight galvanized steel pipe, with black or galvanized cast iron fittings, drainage pattern and screwed joints, or provide service weight cast iron soil pipe and fittings.
   2. Sizes 4-Inch and Smaller: PVC Schedule 40/80 or service weight cast iron soil pipe, conforming to ASTM A74, hubless cast iron soil pipe fittings with cast iron mechanical couplings or stainless steel sleeves with stainless steel bands and neoprene gaskets.

C. Above Ground Chemical Waste Piping: Schedule 40 flame retardant polypropylene, GSR Fuseal, or equal, with electrical-resistance fusion joints and fittings, except that mechanical joints may be used in exposed or easily accessible location.

D. Vent Piping:
   1. Above Ground: Sizes 2 ½ inches and smaller; Schedule 40 PVC or galvanized steel pipe ASTM A53, welded or seamless, with black or galvanized cast iron drainage fittings. Pipe sizes 3 inches or larger: PVC or Cast iron soil pipe and fittings as specified above.
   2. Underground: PVC or Cast iron soil pips and fittings.

E. Underground Building Drain Piping: Schedule 40/80 PVC or service weight cast iron soil pipe: Conforming to ASTM A74, bell and spigot cast iron soil pipe and cast iron bell and spigot fittings or hubless cast iron pipe with cast iron mechanical couplings or stainless steel sleeves with stainless steel bands and neoprene gaskets.

F. Underground Chemical Waste Piping: Schedule 40 flame retardant polypropylene pipe with electrical-resistance fusion joints, as specified above.

G. Building Distribution Gas Piping: Schedule 40 black steel pipe with malleable iron threaded fittings.

3.5 INSTALLATION OF PIPING

A. General:
1. Proceed as rapidly as the building construction will permit.
2. Thoroughly clean items before installation. Cap pipe openings to exclude dirt until fixtures are installed and final connections have been made.
3. Cut pipe accurately and work into place without springing of forcing, properly clearing windows, doors, and other openings. Excessive cutting or other weakening of the building will not be permitted.
4. Remove cutting and threading burrs before assembling piping.
5. Do not install defective piping of fittings. Do not use pipe with threads which are chipped, stripped or damaged.
6. Shoe no tool marks or threads on exposed plated, polished, or enameled connections from fixtures. Tape all finished surfaces to prevent damage during construction.
7. Make changes in directions with fittings; make changes in main sizes with eccentric reducing fittings. Unless otherwise noted, install water supply and return piping with straight side of eccentric fittings at top of the pipe.
8. Run horizontal sanitary and storm drainage piping at uniform grade of ¼-inch per foot, unless otherwise noted. Run horizontal water piping with an adequate pitch upwards in direction of flow to allow complete drainage.
9. Provide sufficient swing joint, ball joints, expansion loops, and devices necessary for a flexible pipeline system, whether or not shown on the Drawings.
10. Support piping independently at pumps, coils, tanks, and similar locations, so that weight of pipe will not be supported by the equipment.
11. Pipe the drains from pump glands, drip pans, relief valves, air vents, and similar locations, to spill over an open sight drain, floor drain, or other acceptable discharge point, and terminate with a plain and unthreaded pipe 6 inches above the drain.
12. Securely bolt all equipment, isolators, hangers, and similar items in place.
13. Support each item independently from other pipes. Do not use wire for hanging or strapping pipes.
14. Provide complete dielectric isolation between ferrous and non-ferrous metals.
15. Provide union and shut off valves suitable located to facilitate maintenance and removal of equipment and apparatus.

B. Installation of Compressed Air Piping: Run compressed air piping with pitch as shown, without pockets. Provide glove valve drips at low points. All branches shall be taken off tip of mains.

C. Equipment Access:
1. Install piping, equipment, and accessories to permit access for maintenance. Relocate items as necessary to provide such access, and without additional cost to the Agency.
2. Provide access doors where valves, motors, or equipment requiring access to maintenance are located in walls or chases or above ceilings. Coordinate location of access doors with other trades as required.

3.6 PIPE JOINTS

A. Copper Tubing:
   1. Cut square, ream cut end and remove burrs, and clean inside of female fitting to a bright finish.
      a. Apply solder flux with brush to tubing.
      b. Apply flux to fitting socket.
      c. Remove internal parts of solder-end valves prior to soldering.
      d. Assemble.
      e. Remove excess flux.
      f. Apply heat and solder. Allow joint to cool.
   2. Provide dielectric unions at points of connection of copper tubing to ferrous piping and equipment.

B. Screwed Piping:
   1. Deburr cuts
      a. Do not ream exceeding internal diameter of the pipe.
      b. Thread to requirements of ANSI B2.1.
   2. Use Teflon tape on male thread prior to cleaning for air and oil piping.

C. Leaky Joints:
   1. Remake with new material.
   2. Remove leaky section and/or fitting as directed.
   3. Do not use thread cement or sealant to tighten joint.

3.7 INSTALLATION OF POLYPROPYLENE AND PVC PIPING

A. Install in strict accordance with the pipe manufacturer's directions.

3.8 PIPE SUPPORTS

A. Support suspended piping with clevis or trapeze hangers and rods.

B. Space hangers and support for horizontal steel pipes according to the following schedule:

Pipe Size	Maximum Spacing on Centers
1 ¼" and smaller	8'–0"
1 ½" to 3"	10'-0"
4" to 5"	14'-0"

C. Space hangers and supports for horizontal copper tubing according to the following schedule:

Tube size	Maximum Spacing on Centers
1" and smaller	6'-0"
1 ½"	7'-0"
2"	8'-0"
2 ½"	9'-0"
3" and larger	10'-0"

D. Provide sway bracing on hangers longer than 18-inch.

E. Support vertical piping with riser clamps secured to the piping and resting on the building structure. Provide at each floor unless otherwise noted.

F. Provide insulation continuous through hangers and rollers. Protect insulation by galvanized steel shields.

G. Arrange pipe supports to prevent excessive deflection, and to avoid excessive bending stress.

H. Support piping from inserts or anchors in concrete slabs. Where practical, provide the inserts under this Section and arrange for the placing under Section 03100 of these Specifications.

I. Hubless Piping:
   1. Provide hangers on the piping at each side of, and within 6 inches of, hubless pipe coupling so the coupling will bear no weight.
   2. Do not provide hangers on couplings.
   3. Provide hangers adequate to maintain alignment and to prevent sagging of the pipe.
   4. Make adequate provision to prevent shearing and twisting of the pipe and the joint.

3.9 SLEEVES AND OPENINGS

A. Provide sleeves in place before concrete is place.
   1. Set pipe sleeves in place before concrete is placed.
   2. For un-insulated pipe, provide sleeves two pipe sizes larger than the pipe passing through, or provide a minimum of ½-inch clearance between inside and outside of the pipe.
   3. For insulated pipe, provide sleeves of adequate size to accommodate the full thickness of pipe covering, with clearance for packing and caulking.

B. Caulk the space between the sleeve and pipe or pipe covering, using a noncombustible, permanently plastic, waterproof, non-staining compound which leaves a smooth finished appearance, or pack with noncombustible fiberglass packing or fiberglass rope to within ½-incn of both wall faces, and provide the waterproof compound described above.

C. Finish and Escutcheons:
   1. Smooth rough edges around sleeves with plaster or spackling compound.
   2. Provide 1-inch wide chrome or nickel plated escutcheons on all pipes exposed to view where passing through walls, floors, partitions, ceiling, and similar locations.
      a. Size the escutcheons to fit pipe and covering.
      b. Hold escutcheons in place with set screw.

3.10 CLEANOUTS

A. Secure the Engineer's approval of locations for cleanouts in finished areas prior to installation.

B. Provide cleanouts of same nominal size as the pipes they serve – except where cleanouts are required in pipes 4-inch and larger provide 4-inch cleanouts.

C. Make cleanouts accessible. After pressure tests are made an approved, thoroughly graphite the cleanout threads.

3.11 VALVES

A. Provide valves in water, air, and gas systems. Locate and arrange so as to give complete regulation of apparatus, equipment, and fixture.

B. Provide valves in at least the following locations:
   1. In branches and/or headers of water piping serving a group of fixtures.
   2. On both sides of apparatus and equipment.
   3. For shutoff of risers and branch mains.
   4. For flushing and sterilizing the system.
   5. Where shown on Drawings.

C. Locate valves for easy accessibility and maintenance.

3.12 CONCRETE

A. Provide concreted required for the work of this Section in strict accordance with pertinent provisions of Division 03 – Concrete.

3.13 DISINFECTION OF WATER SYSTEMS

A. Disinfect water systems in accordance with the Contract Documents.
   1. Perform disinfection under the Engineer's observation. Notify the ENGINEER at least 48 hours prior to start of the disinfection process.
   2. Upon completion of disinfecting, secure and submit the Certificate of Performance required under Article 1.04 of this Section, stating system capacity, disinfectant used, time and rate of disinfectant applied and resultant residuals in ppm at completion.
   3. Use disinfectant method approved by the ENGINEER.

3.14 OTHER TESTING AND ADJUSTING

A. Provide personnel and equipment, and arrange for and pay the costs of all required tests and inspections required by governmental agencies having jurisdictions.

B. Where tests show materials or workmanship to be deficient, replace or repair as necessary, and repeat the tests until the specified standards are achieved.

C. Adjust the system to optimum standards of operations.

END OF SECTION

SECTION 15505 – PIPELINE HYDROSTATIC TESTING

PART 1 – GENERAL

1.1 THE REQUIREMENT

A. Perform all pipeline flushing and testing, complete, for piping system piping as specified herein and in accordance with the requirements of the Contract Documents.

B. Be responsible for providing conveyance of test water to the point of usage and also for disposal, as required, of water used in the testing operations.

1.2 REFERENCE SPECIFICATIONS, CODES, AND STANDARDS

A. Commercial Standards:

ANSI/AWWA B300	Hypochlorites
ANSI/AWWA B301	Liquid Chlorine
ANSI/AWWA C651	Disinfecting Water Mains
ASTM A746	Ductile Iron Gravity Sewer Pipe
ASTM F1417	Installation Acceptance of Plastic Gravity Sewer Lines Using Low-Pressure Air
NSF/ANSI 60	Drinking Water Treatment Chemicals – Health Effects
NSF/ANSI 61	Drinking Water System Components – Health Effects

1.3 SUBMITTALS

A. Submittals shall be made in accordance with Section 01 3300 – Submittal Procedures.

B. Proposed plans for testing of the sanitary sewer system. The methods used may be air or water as described herein. If water method is used then provide the water conveyance, control, and disposal. Advance written notice of its proposed testing schedule for review and concurrence of the ENGINEER shall be submitted.

PART 2 – PRODUCTS

2.1 MATERIALS REQUIREMENTS

A. Temporary valves, plugs, bulkheads, and other air pressure testing and water control equipment and materials shall be provided, subject to the ENGINEER's review. No materials shall be used which would be injurious to pipeline structure and future function. Air test gauges shall be laboratory-calibrated test gauges and shall be recalibrated by a certified laboratory at the CONTRACTOR's expense prior to the leakage test, if required by the ENGINEER.

B. All test equipment, chemicals for chlorination, temporary valves, bulkheads, or other water control equipment and materials shall be selected and furnished, subject to the ENGINEER's review. No materials shall be used that would be injurious to the construction or its future function.

C. Chlorine for disinfection may be in the form of liquid chlorine, sodium hypochlorite solution, or calcium hypochlorite granules or tablets.

D. Liquid chlorine shall be in accordance with the requirements of ANSI/AWWA B301. Liquid chlorine shall be used only:
   1. In combination with appropriate gas flow chlorinators and ejectors;
   2. Under the direct supervision of an experienced technician;
   3. When appropriate safety practices are observed.

A. Sodium hypochlorite and calcium hypochlorite shall be in accordance with the requirements of ANSI/AWWA B300.

PART 3 – EXECUTION

3.1 GENERAL – PIPELINE HYDROSTATIC TESTING

A. Unless otherwise specified, water for testing will be furnished by OWNER; however, all necessary provisions for conveying the water from the designated source to the points of use shall be made by the CONTRACTOR.

B. Release of water from pipelines, after testing has been completed, shall be performed as reviewed by the ENGINEER.

C. All testing operations shall be performed in the presence of the ENGINEER.

3.2 TESTING OF SEWER PIPING

A. General: All gravity sewer pipes and service laterals shall be tested for exfiltration and/or infiltration and deflection, as specified. All leakage tests shall be completed and approved prior to placing of permanent resurfacing. When leakage or infiltration exceeds the amount allowed by the Specifications, locate the leaks, and make the necessary repairs or replacements in accordance with the Specifications to reduce the leakage or infiltration to the specified limits. Any individually detectable leaks shall be repaired, regardless of the results of the tests.

B. Leakage Tests: Sanitary sewer systems shall be tested for leakage as follows:
   1. Gravity sewers 24 inches or less in diameter, water exfiltration test or water infiltration test as approved. The ENGINEER may allow substitution of an air pressure test for the water exfiltration test.
   2. Gravity sewers greater than 24 inches in diameter: air pressure test or water infiltration test, or as approved.
   3. Pressure sewers (force mains): water pressure test at 120% of maximum operating pressure, measured at the lowest point of the pipeline section being tested.

C. Water Exfiltration Test: The entire section of installed sewer pipe shall be tested upstream from the existing sewer pipe connection. The pipe shall be filled completely with water.
   1. The allowable leakage will be computed by the formula:

		$E = 0.000012\ LD\ (H)^{1/2}$
in which	E =	Allowable leakage in gallon per hour of sewer tested
	L =	Length of sewer and lateral connections tested, in feet
	D =	Internal diameter of the pipe in inches
	H =	Difference in elevation between the water surface at each end of the new pipeline

D. Water Infiltration Test: If, in the opinion of the ENGINEER, excessive ground water is encountered in the construction of a section of the sewer, the exfiltration test for leakage shall not be used.
   1. The end of the sewer at the upper structure shall be closed sufficiently to prevent the entrance of water, and pumping of ground water shall be discontinued for at least 3 days, after which the section shall be tested for infiltration.
   2. Unless otherwise specified, infiltration will be measured using measuring devices approved by the ENGINEER.

E. Air Pressure Test: Furnish all materials, equipment, and labor for making an air test. Air test equipment shall be approved by the ENGINEER.

1. Conduct an initial air test of the sewer main line after densification of the backfill but prior to installation of the lateral connection sewers. Such tests will be considered to be for convenience and need not be performed in the presence of the ENGINEER.
2. The final leakage test of the sewer main line and branching lateral connection sewers, shall be conducted in the presence of the ENGINEER, and shall be performed in accordance with the procedures defined in ANSI/ASTM C828 and ASTM F1417, whichever is applicable.
3. Joints may be air tested individually, joint by joint, with the use of specialized equipment. The joint testing procedure shall be submitted for the ENGINEER's review prior to testing.

F. Water Pressure Test: Preparatory to testing, the section of the pipeline to be tested shall be filled with water and placed under a slight pressure for at least 48 hours. The pipeline shall then be brought up to the test pressure specified and maintained on the section under test for a period of not less than 4 hours.

1. Accurate means shall be provided for measuring the quantity of water required to maintain full pressure on the line for the test period, which volume shall not exceed:

		$L = \frac{CN\,D\,(P)^{1/2}}{1850}$
in which	L =	Maximum allowable leakage in gallons per hour for the section of pipeline tested
	N =	Number of joints in length tested
	D =	Diameter of pipe in inches
	P =	Test pressure in psi
	C =	1.0 for reinforced concrete pressure pipe with rubber ring joints, cylinder type
	C =	3.0 for reinforced concrete pressure pipe with rubber joints, non-cylinder type
	C =	0.50 for cast iron pipe with mechanical or rubber gasket joints and asbestos-cement pipe
	C =	1.0 for other type of cast iron joints (calked) and other types of pipe

G. Deflection Test: All flexible and semi-rigid main line pipe shall be tested for deflection, joint displacement, or other obstruction by passing a rigid mandrel through the pipe by hand, not less than 30 days after completion of the trench backfill, but prior to permanent resurfacing. The mandrel shall be a full circle, solid cylinder, or a rigid, non-adjustable, odd-numbered leg (9-leg minimum) steel cylinder, approved by the ENGINEER as to design and manufacture. The circular cross section of the mandrel shall have a diameter of at least 95% of the specified average inside pipe diameter of the pipe and the minimum length of the circular portion of the mandrel shall be equal to the nominal diameter of the pipe. Obstructions encountered by the mandrel shall be corrected.

3.3 GENERAL – PIPELINE HYDROSTATIC TESTING FOR POTABLE WATER

A. Unless otherwise indicated, water for testing and disinfecting water pipelines will be furnished by the OWNER; however, all necessary provisions for conveying the water from the designated source to the points of use shall be made by the CONTRACTOR.

B. All pressure pipelines shall be tested.

C. Disinfection shall be accomplished by chlorination. All chlorinating and testing operations shall be performed in the presence of the ENGINEER.

D. Disinfection operations shall be scheduled by as late as possible during the contract time period so as to assure the maximum degree of sterility of the facilities at the time the WORK is accepted.

E. HYDROSTATIC TESTING OF PIPELINES

Pressure testing may be performed before or after final backfilling. If the pipeline is properly and safely center-loaded, a visual inspection for leaks may be made along the pipeline, while the test section is under test pressure. Any visible leaks shall be repaired and a retest conducted. However, if mechanical compaction is to be used in the backfilling operations per AWWA C600 and C605, the pressure tests shall not be performed until final backfilling is 100% completed including compaction. Backfill and compaction shall be 100% complete for any restrained pipeline sections for the entire designated restrained distance prior to pressure testing. All pipe sections, stub laterals, fire hydrant laterals, blow-offs, and valves encompassed in the test section shall be verified to be open, water filled and pressurized. Actual hydrostatic monitor testing shall not begin until the pipeline has been filled entirely with water for at least 24 hours to allow for air venting and absorption.

1. **Pressure Testing**: Unless otherwise noted in the contract documents, the minimum prescribed test pressure shall be at least 200 psi for lines smaller than 16 inches and 150 psi for lines 16 inches or larger, not to exceed 5 psi over the minimum prescribed test pressure, as measured at the lowest end of the section under test. The duration of each pressure test shall be at least 2 hours, during which time the test section shall not drop below the minimum prescribed test pressure. If the pressure in the pipe test section has not stabilized by the end of the testing period, a hydrostatic retest will be required. Each section of a new line between sectionalizing valves or between the last sectionalizing valve and the end of the project shall be tested separately as required in AWWA C600 and C605, and/or as modified in these specifications, except that any such section less than 500 feet in length may be tested with the adjacent section, if both sections of line have the same pipe class rating. No section greater than 2,640 feet in total pipe length shall be tested without written permission of the ENGINEER. CONTRACTOR shall bleed all air out of new lines being tested. After all air has been determined to have been removed and the pressure has stabilized and maintained constant, the line shall be determined to be ready for testing. The CONTRACTOR shall furnish all necessary apparatus and assistance to conduct the testing.
2. **Testing Allowance / Makeup Water:** If a testing allowance is permitted by the Contracting Agency, the makeup water volume shall be determined after the pressure test has been satisfactorily completed and all backfilling and compaction has been completed to top of trench. The allowance shall be defined as the maximum quantity of additional water necessary to be supplied into the pipe section under test to restore the ending test pressure to the beginning test pressure, after the pipeline has been filled with water and all air expelled. The duration of each makeup water test shall be at least 2 hours. To pass the allowance testing, the quantity of makeup water from the pipeline shall not exceed the makeup water quantity allowed by the following formula:

$$\frac{A = LD\sqrt{P}}{148{,}000}$$

Where

A = testing allowance (makeup water), gallons per hour.

L = length of pipe tested, feet.

D = nominal diameter of pipe, inches.

P = test pressure, pounds/square inch.

If the pipeline under test contains sections of various diameters, the testing allowance will

be the sum of the computed allowance for each size. Should the test on any section of the pipeline require more makeup water than allowed by the above formula, the CONTRACTOR shall locate and repair the defective pipe, fittings, or joint until the makeup water volume is within the specified allowance. All repairs and re-tests, if required, shall be made at the CONTRACTOR's expense

F. DISINFECTING PIPELINES

1. General**:** All potable water pipelines except those appurtenant to hydraulic structures shall be disinfected in accordance with the requirements of NSF/ ANSI 60 & 61 AND AWWA C651 (Latest Version) Standards.
2. Sampling Ports**:** Provide sampling ports along the pipeline as defined on AWWA C651. Taps may be made at man-ways and air valves to help facilitate the spacing requirement.
3. New water mains shall be physically isolated from active distribution systems until initial disinfection and satisfactory bacteriological results have been completed.
4. Disinfection**:** The method of chlorination used shall be approved by the Contracting Agency and must conform to NSF/ANSI 60 & 61 and the AWWA C651 (Latest Version) Standards. The OWNER/ENGINEER shall determine the number and locations for sample risers. The CONTRACTOR is responsible for supplying equipment to properly dose the new main with a chlorine concentration not less than 10 parts per million (ppm). The OWNER/ENGINEER will verify the chlorine level is at 10 ppm at time of dosing and verify that after 24 hours of high chlorine solution sitting in the pipes that the chlorine concentration is at 10 ppm or greater. All new valves, hydrants and other appurtenances shall be operated fully to ensure full disinfection from the chlorine solution. After 24-hour verification is complete, the water main shall be completely flushed of the high chlorine concentration. A chlorine neutralizing agent may be required during flushing discharge. Check with the OWNER/ENGINEER to confirm.
   a. Methods of Applying Chlorine: One of the following methods of application of chlorine shall be used, subject to the approval of the Contracting Agency.
      1) Liquid chlorine gas-water mixture.
      2) Calcium or sodium hypochlorite and water mixture.
   b. Point of Application: The preferred point of application of the chlorinating agent is at the beginning of the pipeline extension or any valved section of it and through a corporation stop inserted in the top of the newly laid pipe. The water injector for delivering the chlorine-bearing water into the pipe should be supplied from a tap or other potable water source on the pressure side of the gate valve controlling the flow into the pipeline extension.
   c. Rate of Application: Water from the existing distribution system or other approved potable water source of supply shall be controlled so the rate of flow shall not exceed 500 gpm, unless approved by the OWNER/ENGINEER, through a suitable measuring device into the newly laid pipeline during the application of chlorine. The rate of chlorine solution flow shall be in such proportion to the rate of water entering the pipe that the chlorine dose applied to the water entering the newly laid pipe shall produce at least 10 ppm of residual chlorine after 24 hours standing in the pipe. This may be expected with an application of 50 ppm, although some conditions may require more. On lines 12 inches in diameter or less, determination of the rate of flow of water into the line to be treated may be made by starting with the line full of water and measuring the rate of discharge at a hydrant located at the end of the pipe farthest away from the point of chlorine application. For lines larger than 12 inches in diameter, the disinfection operation is generally started with the line empty.
   d. Retention Period: The highly chlorinated water shall be retained in the pipe long enough to destroy all non-spore-forming bacteria. This period should be at least 24 hours and no more than 48 hours. If the circumstances are such that less than

a 24-hour retention period must be used and upon approval by the OWNER/ENGINEER, the chlorine concentration shall be increased to 100 ppm not to exceed 300 ppm and retained for at least 2 hours. Under these conditions, special care should be taken to avoid chemical attack on pipes, valves, hydrants, and other appurtenances.

e. Short Pipe Sections / Laterals / Stubs: For short sections of new pipelines of up to twenty feet or less in length and where the new line cannot be isolated for testing or installation of a temporary backflow and metering set-up is not possible or feasible, the following procedure may be used with OWNER/ENGINEER approval on a case-by-case basis. Various modifications may be necessary or required depending on specific circumstances. This does not apply to small diameter domestic copper water services of up to two inches.
   1) 100% of all new pipe materials/fittings used in the installation and tie-in from the existing main line to the backflow assembly on fire lines and up to the first meter, connection on domestic water lines shall be disinfected. Any new tie-in valves at the main line shall remain completely closed.
   2) All new pipe materials/fittings used in the installation and tie-in are to be disinfected by swabbing with a chlorine solution of at least 200 ppm using NSF/ANSI 60 and 61 approved equipment, materials, and chemicals. The chlorine solution shall be tested by the OWNER/ENGINEER or designated representative to ensure that it meets the strength requirements. Inspector shall witness the swabbing procedure and document results. A new swabbing device should be used for each new line.
   3) The new lines and fittings shall remain empty and closed to the atmosphere for 24 hours to allow the high chlorine treatment sufficient time to disinfect.
   4) After the 24-hour period, the new valves shall be operated, and the ends of the lines shall be opened at the largest port available to allow initial flushing of the high chlorine solution. The Contracting Agency shall test this first flow of water to verify that at least 10 ppm of chlorine is still present. The line can then continue to be sufficiently flushed until the chlorine levels are below 2.0 ppm as verified by the Contracting Agency.
   5) The new lateral valves at the main tie-in shall then be closed and remain closed after flushing; the new lateral line shall remain charged with water and allowed to sit for an additional 24 hours.
   6) After 24 hours, the OWNER/ENGINEER shall check the chlorine residual levels and collect microbiological samples for lab testing as detailed herein.
   7) The new lateral valves at the main tie-in shall remain closed until the OWNER/ENGINEER receives the laboratory results that show a negative or “Absent” reading for both Total Coliform and E. Coli.

f. Final Flushing, Sampling and Testing**:** Following chlorination, all treated water in the newly laid pipeline shall be thoroughly flushed until the replacement water throughout the new pipeline can be proved, by laboratory testing, comparable in quality to the water served to the public from the existing water system. Prior to sampling for laboratory testing, the residual chlorine throughout the length of the pipeline shall be reduced to 2.0 ppm or less per Regulatory Agency allowances. Once the required residual chlorine level in the pipeline is achieved, bacteriological samples shall be taken as required by Regulatory Agency.

G. CONNECTIONS TO EXISTING SYSTEM

Any temporary air release blow-offs and test sampling risers shall be left exposed, accessible, and protected during backfill operations until all testing is complete. After all testing has been completed and passed acceptance, all temporary blow-offs and sampling risers shall be properly lowered and terminated. Connections to existing pipelines or existing valves shall not

be made until after all new pipe main line or specific sections thereof, has satisfactorily passed all required hydrostatic and disinfection tests and the Regulatory Agency gives approval to make the final connections and put new water mainline into service.

END OF SECTION

SECTION 15506 – POOL PIPE PRESSURE TESTING

PART 1 – GENERAL

1.1 Summary

A. This section details the hydrostatic pressure testing requirements for installed PVC pressure piping systems, including pipe, fittings, valves, and joints.

B. The contractor is responsible for supplying all necessary labor, equipment, and materials for testing.

1.2 References

A. AWWA C605: "Standard for Underground Installation of Polyvinyl Chloride (PVC) and Molecularly Oriented Polyvinyl Chloride (PVCO) Pressure Pipe and Fittings." This is the primary reference for field-testing procedures.

B. AWWA C900 Series: For PVC water pipe specifications.

C. Uni-Bell PVC Pipe Association (PVCPA): Technical literature, such as the *Handbook of PVC Pipe*, should be consulted for installation and testing guidelines.

D. ASTM International: Standards like ASTM D2241 detail manufacturing specifications for PVC pressure-rated pipe.

E. Local Authorities: Testing must comply with all local municipal codes and regulatory requirements.

1.3 Safety and Environmental Practices

A. Hydrostatic Testing Only: PVC pressure pipe must be tested with water. Air testing is strictly prohibited for pressure pipe due to the risk of a violent and dangerous rupture from stored energy.

B. Flushing and Disposal: All flushing operations and the disposal of chlorinated water must be performed according to regulatory and permit requirements.

PART 2 – PRODUCTS

This section typically does not apply to field testing procedures, which fall under Part 3. However, it is referenced for materials to ensure they meet the pressure class and are suitable for the specified test.

2.1 Test Equipment

A. Pressure Source: A pump capable of pressurizing the system and maintaining constant pressure.

B. Pressure Gauge: A certified gauge with a range of at least twice the test pressure but no more than 1.5 times the pressure for a smaller gauge.

C. Plugs and Restraints: All temporary end caps, plugs, and permanent thrust restraints must be designed to withstand the test pressure.

PART 3 – EXECUTION

A. Perform tests in presence of Owner and Landscape Architect with no pressure loss or noticeable leaks.

B. Do not include valves and equipment in tests. Include connection to previously tested sections if systems are tested in sections.

C. Perform tests as follows

System	Test Pressure	Test Medium	Duration
Pool Piping	50 psig	Water	4 hours
Domestic Water	150 psig	Water	4 hours
Gas Piping	50 psig	Air	4 hours

1. All concrete anchor blocks shall be allowed to cure a sufficient time to develop adequate thrust resistance prior to testing and the pipeline shall not be tested until it has been filled with water for a minimum or 24 hours. Before testing, the pipe shall be backfilled with 2 1/2 feet of material or center loaded to hold the pipe in place while testing. The water necessary to maintain this pressure shall be measured through a meter. Any noticeable leaks shall be stopped and any defective pipe shall be replaced with new sections prior to commencing with the test.
2. The test shall be made prior to connecting the new line with the existing pipes and main. The test shall further be conducted with the open ends of pipe, valves and fittings suitably closed. Valves shall not be operated during the testing procure.

D. Field testing Procedure:
1. The test shall be conducted in the following manner. All air shall be expelled from the pipe. To accomplish this, if air valves or other outlets are not available, taps shall be made at the high points to expel the air and these taps shall be tightly plugged afterwards. The pressure in the pipeline shall then be pumped up to the specified test pressure. When the test pressure in the line has dropped to 10 PSI, at which time the pressure shall again be pumped up to the specified test pressure. This procedure shall be repeated until four hours have elapsed from the time the specified test pressure was first applied. At the end of the four hour period, the pressure shall be pumped up to the test pressure for the last time.

E. Leakage allowance:
1. The leakage shall be considered as the total amount of water pumped into the pipeline during the four hour period including the amount required to reach the test pressure for the final time. Leakage shall not exceed the rate of 24 gallons per inch of diameter, per mile, per 24 hours.
2. The following table indicates the leakage allowance for various size pipe and is equal to the number of gallons per the four hour test period per 1,000 feet of pipe being tested:

Leakage Allowances
Gallons Per Four Hours per 1,000 Feet of Pipe

Pipe Size (Inches)	Test Pressure (PSI)	Allowable Leakage (Gallons)
1	50	.8
1 1/2	50	1.2
2	50	1.5
2 1/2	50	1.9
3	50	2.3
4	50	3.0
6	50	4.6
8	50	6.0
10	50	7.6
12	50	9.0
15	50	11.4

18	50	13.6
21	50	16.0
24	50	18.2
27	50	20.4

3. Any noticeable leak shall be stopped and all defective pipe, fittings, valves and other accessories discovered in consequence of the test shall be removed and replaced by the Contractor with sound material. The test shall then be repeated until the total leakage during a test of four hours duration does not exceed the rate specified above. All testing shall be inspected by the Owner's representative.

END OF SECTION

DIVISION 16
ELECTRICAL

SECTION 16000 – GENERAL ELECTRICAL REQUIREMENTS

PART 1 – GENERAL

1.1 SCOPE OF WORK

A. It is the intent of this part of the Contract Documents to cover the work and materials necessary for erecting a complete electrical system, tested and ready for continuous use. The system shall be constructed in accordance with the Contract Documents, and Federal, State, and Local codes and regulations.

1.2 RELATED WORK

A. The CONTRACTOR shall coordinate the work with other trades, and furnish and install the equipment in accordance with the manufacturers' requirements.

1.3 GENERAL PROVISIONS

A. Minimum sizes of equipment, and electrical devices, are indicated but it is not intended to show every offset and fitting, nor every structural or mechanical difficulty that will be encountered during the installation of the work.

B. Work indicated on the Plans is approximately to scale, but actual dimensions and detailed Plans should be followed as closely as field conditions permit. Field verification of scale dimensions on Plans is governed by field conditions. Installation of systems and equipment is subject to clarification as indicated in reviewed shop drawings and field coordination.

C. Discrepancies indicated on different Plans, between Plans and actual field conditions, or between Plans and Contract Documents shall be promptly brought to the attention of the ENGINEER for clarification, prior to purchasing and installing equipment.

D. The alignment of equipment and conduit shall be adjusted to accommodate for mechanical/ structural changes, or to avoid work of other trades, without extra expense to the OWNER.

E. The CONTRACTOR shall furnish and install the parts and pieces necessary to the installation of equipment, in accordance with the best practice of the trade, and in conformance with the requirements of these Contract Documents.

F. Items not specifically mentioned in these Contract Documents, or noted on the Plans, or indicated on reviewed shop drawings, but which are obviously necessary to make a complete working installation, shall be deemed to be included herein.

G. The CONTRACTOR shall layout and install electrical work prior to placing floors and walls. Furnish and install sleeves and openings through floors and walls, required for installation of conduits. Sleeves shall be rigidly supported and suitably packed, or sealed, to prevent ingress of wet concrete. Spacers shall be installed in order to prevent conduit movement. Dimensions indicated for electrical equipment and their installation are restrictive dimensions.

H. The CONTRACTOR shall furnish and install inserts and hangers required to support conduits and other electrical equipment. If the inserts, hangers, sleeves, or other mounting hardware are improperly placed, or installed, the CONTRACTOR shall do necessary work, at their own expense, to rectify the errors.

I. Electrical equipment shall be capable of operating successfully at full-rated load, without failure, at an ambient air temperature of 40 degrees C, and specifically rated for the altitude indicated on the Plans. Electrical equipment not rated for operation at that temperature shall be provided with air conditioning to meet the manufacturers' operating temperature.

J. If any contradictions, contrasts, non-homogeneity, or inconsistency appears, the more

strict criteria noted and the collective requirements in any and all of the project documents shall apply.

K. The CONTRACTOR shall perform necessary saw cutting, core drilling, excavating, removal, shoring, backfilling, and other work required for the proper installation of conduits, whether inside or outside of the buildings and structures. The CONTRACTOR shall repair and patch where demolition has taken place in a manner to match existing original structure.

1.4 REGULATIONS, CODES, AND STANDARDS

A. Electrical work, including connection to electrical equipment integral with mechanical equipment, shall be performed in accordance with the latest published regulations, codes, and standards, of the following:
   1. National Electrical Code (NEC)
   2. State and local codes
   3. Institute of Electrical and Electronic Engineers (IEEE)
   4. American National Standards Institute (ANSI)
   5. American Society for Testing and Materials (ASTM)
   6. Insulated Cable Engineers Association (ICEA)
   7. National Electrical Manufacturers Association (NEMA) Standards
   8. Federal Occupational Safety and Health Act (OSHA)
   9. National Fire Protection Association (NFPA)
   10. National Electrical Testing Association (NETA)

B. When applicable, the material used in the performance of the electrical work shall be listed by the Underwriters' Laboratories, Inc. (UL) for the class of service for which they are intended.

1.5 SUBMITTALS

A. Where indicated or required by the ENGINEER, Shop Drawings shall include clear, concise calculations showing equipment anchorage forces and the capacities of the anchorage elements (including seismic and structural anchoring calculations).

B. It is the obligation of the CONTRACTOR to organize their work, so that a complete electrical, instrumentation, and control system for the facility will be provided, and will be supported by accurate shop and record drawings, and O&M manuals.

C. The CONTRACTOR shall submit detailed shop drawings and data prepared and organized by the suppliers. The quantity of submittal sets required shall be as specified in the Contract Documents.

D. The submittals shall be neatly grouped and organized by specification section number, and sub-section. Related information shall be highlighted, and the specific product shall be marked. All submittals shall be complete, and presented in one package. Incomplete submittals will be returned without review. If a portion of the project requires a fast-track schedule, that portion only may be submitted earlier under a separate cover letter. The following shall be submitted to the ENGINEER and returned, reviewed to the CONTRACTOR before fabrication is started.
   1. A complete list of the equipment and materials, including the manufacturer's name, product specification, descriptive data, technical literature, performance charts, catalog cuts, installation instructions, and spare part recommendations for each different item of the equipment specified. The above shall clearly show all the specified requirements as described in the Specifications including but not limited to specific U.L. and NEMA rating, technical capabilities, test result verifications, and acceptance letters.

2. Drawings containing complete point to point wiring and schematic diagrams, control diagrams, and any other details required to demonstrate that the system has been coordinated and will operate as intended. Drawings for each panel. cabinet, or enclosure shall show a complete Bill of Materials, wire numbers for internal panel and field wiring, terminal block numbers, proposed internal layout with assembly details, anchoring, support, and appurtenances of equipment, and equipment relationship to other parts of the work including clearances for maintenance and operations.
3. Any exceptions to these specifications, with the reasons for requesting such exceptions, with calculations and drawings for redesign of related components, including detail drawings showing internal and assembly details, with installation instructions. Proposed layout showing any modifications or exceptions to related work made necessary by this work, with calculations and drawings showing such modifications or exceptions.

E. Upon Project acceptance, the CONTRACTOR shall submit "Record Drawings" of the electrical, control, and instrumentation, along with step-by-step procedure manuals for the installation, operation start-up, and maintenance of the equipment. Each set shall include installation, operating, troubleshooting, and maintenance and overhaul instructions in complete detail. It shall also include possible breakdowns and repairs, and troubleshooting guides, as well as simplified wiring and control diagrams of the system installed. This shall provide the OWNER with comprehensive information on all systems and components to enable operation, service, maintenance and repair. Exploded or other detailed views of all equipment, devices, assemblies, and accessory components shall be included, together with complete parts lists and ordering instructions.

1. Record Drawings:
   a. The CONTRACTOR shall maintain a marked up set of Contract Document Plans showing actual installed circuit numbers, conduit sizes, cable tray routing, number of conductors, conductor sizes (larger than #12 AWG), and all other deviations from the design Plans.
   b. Underground conduit and concealed items shall be dimensioned on the Plans from permanent, visible, structural features.
   c. The CONTRACTOR shall provide actual motor size, starter size, and overload heater size, along with all other protective equipment for all 480 V motor circuits as part of the one-line record drawings.
   d. The CONTRACTOR shall revise all conductor identification and panel schedules to indicate as-built conditions.

PART 2 – PRODUCTS

2.1 GENERAL MATERIALS AND METHODS

A. Materials, equipment, and parts comprising any unit, or part thereof, specified or indicated on the Plans, shall be new and unused, of current manufacture, and of highest grade consistent with the state of the art. Damaged materials, equipment, and parts, are not considered to be new and unused, and will not be accepted.

B. Field verification of scale dimensions on Plans is directed, since actual locations, distances, and levels will be governed by actual field conditions. The CONTRACTOR shall also review structural, yard, mechanical, and other Plans, and the accepted electrical and mechanical shop drawings, and shall adjust their work to conform to the conditions indicated therein.

C. The fabricator of major components, such as distribution panel boards, switchgear, and motor control centers, shall also be the manufacturer of the major devices therein.

D. Refer to various Division sections for individual equipment manufacturers. Indicated manufacturers are subject to strict compliance with the specifications and complete project

documents. The reference to a particular manufacturer does not relieve the CONTRACTOR from conforming to the specified requirements.

2.2 NAMEPLATES

A. Where indicated elsewhere in these specifications, or on the Plans, the CONTRACTOR shall furnish and install nameplates, which shall be black laminate with white letters. The nameplates shall be fastened to the various devices with round head stainless steel screws. Each disconnecting means for service, feeder, branch, or equipment conductors shall have nameplates indicating its purpose.

2.3 EQUIPMENT ASSEMBLIES & SUPPORTS

A. Equipment assemblies, such as Service Entrance Sections, Switchgear, Switchboards, Control and Distribution Panels, and other custom fabricated electrical enclosures shall bear a UL label as a complete assembly. The UL label on the individual components making up the assembly will not be considered sufficient to meet the present requirement. Whenever a generic UL label does not apply for the assembly, a serialized UL label shall be affixed to the assembly, and the serial number shall be submitted with the assembly record shop drawings.

B. Custom fabricated electrical control panels, and enclosures, shall bear a UL label affixed by a local UL inspector.

C. Equipment Supports: Unless otherwise indicated, equipment supports, anchors, and restrainers shall be adequately designed for static, dynamic, wind, and seismic loads. The design horizontal seismic force shall be based on the greater of: that noted in Section 01610 (Seismic Design Criteria), the general structural notes, or as required by the governing building code, or 10 percent of gravity. Submitted design calculations for equipment supports shall bear the signature and seal of an engineer registered in the State wherein the project is to be built, unless otherwise indicated.

PART 3 – EXECUTION

3.1 UTILITY SERVICE AND EQUIPMENT

A. Electrical Utility: The CONTRACTOR shall be responsible for contacting and coordinating the electrical utility work with the Electrical Utility Company. The CONTRACTOR shall be responsible for furnishing and installing equipment and material required to bring electrical power service to the service location in conformance with the electrical utility requirements. The CONTRACTOR may have to provide the following for the Electrical Utility Company's primary (from utility power line to the utility transformer) and secondary (from utility transformer to the service) electrical lines in accordance with the Electrical Utility Company's specifications and requirements:
   1. Conduits (verify quantity and sizes).
   2. Trenching, backfill, and compacting (verify trench size(s), backfill material, and compaction percentage requirements).
   3. Concrete pad(s) (for pad mounted transformer(s)).
   4. Cable protection along the vertical drop at the Utility Company's pole (if pole mounted transformer(s).
   5. Other items required by the power Utility Company's specifications.

B. The CONTRACTOR shall also submit copies of service entrance shop drawings to the Utility Company, per utility submittal requirements, prior to submittal to the ENGINEER. The CONTRACTOR shall obtain written approval from the power Utility Company that the service entrance equipment is acceptable prior to release the order to the supplier for fabrication. A copy of the approval letter from the utility shall be transmitted to the ENGINEER along with the submittal.

C. Telephone Service: The CONTRACTOR shall be responsible for contacting the Telephone Company to coordinate requirements to provide telephone service, as called for on the Plans. The CONTRACTOR shall provide trenching, conduit, and backfill for the Telephone Company's communication lines from the Telephone Company's main distribution panel to the Telephone Company's connection box at this project site, as required by the Telephone Company.

3.2 INSTALLATION OF ELECTRICAL EQUIPMENT

A. Coordinate the installation of electrical equipment with other trades.
   1. Arrange for the building in of equipment during structure construction.
   2. Where equipment cannot be built-in during construction, arrange for sleeves, box-outs, and other openings, as required to allow installation of equipment after structure construction is complete.

B. Verify that equipment will fit support layouts indicated.

C. Equipment Dimensions and Clearances:
   1. Do not use equipment that exceeds the indicated dimensions, except as approved in writing by the ENGINEER.
   2. Do not use equipment or arrangements of equipment that reduce required clearances or exceed the space allocation.

D. Install equipment in accordance with the manufacturer's instructions.

E. Equipment Access:
   1. Install equipment so it is readily accessible for operation and maintenance.
   2. Equipment shall not be blocked or concealed.
   3. Do not install electrical equipment such that it interferes with normal maintenance requirements of other equipment.

F. Equipment shall be installed plumb, square and true with the building construction, and shall be securely fastened.

G. Outdoor wall-mounted equipment, and indoor equipment mounted on earth, or water bearing walls, shall be provided with corrosion-resistant spacers to maintain 1/4-inch separation between the equipment and the wall.

H. Screen or seal all openings into outdoor equipment to prevent the entrance of rodents and insects.

I. Equipment fabricated from aluminum shall not be imbedded in earth or concrete.

J. Provide all necessary anchoring devices and supports:
   1. Use supports as detailed on the Plans and as specified.
   2. Supports and anchoring devices shall be rated and sized based on dimensions and weights verified from approved equipment submittals.
   3. Hardware shall be stainless steel.
   4. Do not cut, or weld to, building structural members.
   5. Do not mount safety switches and external equipment to other equipment enclosures, unless enclosure mounting surface is properly braced to accept mounting of external equipment.

K. CONTRACTOR shall verify exact rough-in location and dimensions for connection to electrical items furnished by others.
   1. Shop drawings shall be obtained from those furnishing the equipment.
   2. Proceeding without proper information may require the CONTRACTOR to remove and replace work that does not meet the conditions imposed by the equipment supplied.

3. Provide sleeves wherever openings are required through new concrete or masonry members. Place sleeves accurately and coordinate locations with the ENGINEER.
4. Should any cutting and patching be required on account of failure of the CONTRACTOR to coordinate penetrations, such cutting and patching shall be done at the expense of the CONTRACTOR.
   a. The CONTRACTOR shall not endanger the stability of any structural member by cutting, digging, chasing, or drilling and shall not, at any time, cut or alter the work without the ENGINEER's written consent.
      i. Provide additional reinforcing if required.
      ii. Cutting shall be done neatly using proper tools and methods.
   b. Subsequent patching to restore walls, ceilings, or floors to their original condition shall be done by the CONTRACTOR.

L. Provide concrete foundations or pads required for electrical equipment as indicated or specified.
   1. Floor-mounted equipment shall be mounted on a 4-inch concrete housekeeping pad. Pad shall be poured on top of the finished floor or slab.

3.3 TEMPORARY POWER

A. The CONTRACTOR shall furnish, install, and maintain, temporary power and lighting systems needed for construction. This temporary system shall include weatherproof panel(s) for the CONTRACTOR's main breakers and distribution system. Ground fault interrupting equipment shall be installed. Connections shall be watertight, with wiring done with Type SO portable cable. After construction is completed, the CONTRACTOR shall remove temporary power equipment and devices.

3.4 CUTTING AND REPAIRING

A. Where it becomes necessary to cut into existing work for the purpose of making electrical installations, core drills shall be used for making circular holes. Other demolition methods for cutting or removing shall be reviewed by the ENGINEER prior to starting the work.

B. The CONTRACTOR shall repair damage caused by construction, or demolition work, and restore damaged areas to original condition.

3.5 CORROSION PROTECTION

A. Wherever dissimilar metals, except conduit and conduit fittings, come in contact, the CONTRACTOR shall isolate these metals, as required, with neoprene washers, 9 mil polyethylene tape, or gaskets. Where fastening conduit, electro plated, or equivalent fasteners and stainless-steel bolts shall be used.

B. Factory finishes damaged during shipping, or construction, shall be restored to original new condition. Rust shall be removed, and bare metal surfaces shall be primed and painted to match the original surrounding finish.

C. Electrical panels, switchgear, motor control centers, and other electrical equipment, shall be shipped in sealed dust and moisture proof plastic sheet enclosures, and the seal maintained until units are installed. Said units shall be new and free of any dirt, dust, water, grease, rust, damaged parts or components. Relays, starters, circuit breakers, switches, contacts, insulators, mechanisms, and buses shall be free of dust, dirt, oil, moisture, metal shavings, and other debris before testing and energizing.

D. Once equipment is installed, it shall be protected at all times with plastic sheet covers until the area is free of dirt, dust, paint spray, water, and other trades. Heat shall be provided to eliminate condensation.

3.6 COORDINATION OF THE ELECTRICAL SYSTEM

A. The CONTRACTOR shall verify actual equipment, and motor full-load, and locked-rotor

current ratings. The necessary minimum equipment, wire, and conduit sizes are indicated on the Plans. If the CONTRACTOR furnishes equipment of different ratings, the CONTRACTOR shall coordinate the actual current rating of equipment furnished with the branch circuit conductor size, the overcurrent protection, the controller size, the motor starter, and the branch circuit overcurrent protection. The branch circuit conductors shall have a current carrying capacity of not less than 125 percent of the actual full-load current rating. The size of the branch circuit conductors shall be such that the voltage drop from the overcurrent protection devices, up to the equipment, shall not exceed 3 percent, when the equipment is running at full-load and rated voltage.

3.7 TESTING

A. The electrical work shall be free from improper grounds, and from short circuits. The correctness of the wiring shall be verified first by visual comparison of the conductor connections with connection diagrams. Next, individual circuit continuity checks shall be made by using electrical circuit testers. Last, the correctness of the wiring shall be verified by the actual electrical operation of the electrical and mechanical devices. Any deviation from the wiring indicated on the Plans, or accepted Drawings, shall be corrected and indicated on the record drawings.

B. Each conductor shall be identified as required by the Contract Documents. This identification shall be indicated on the record drawings to enable rapid and accurate circuit tracing by maintenance personnel.

3.8 SINGLE LINE DIAGRAMS

A. Single line diagrams, as indicated on the Drawings, show circuit voltages, circuit protection rating, and other pertinent data. Where conflicts exist on the Drawings, the single line diagrams shall take precedence. Grounding conductors are not necessarily indicated. See grounding requirements specified elsewhere herein.

END OF SECTION

PART 1 - GENERAL

1.1 DESCRIPTION

A. This Section outlines the wiring requirements for the electrical work and forms a part of all other Sections of Division 16 unless otherwise specified.

1.2 SUBMITTALS

A. Submit for the Owner's approval material lists, shop drawings, factory test reports and technical data to the extent required in this Section and Section 16000.

1.3 WIRING

A. Wiring for furnished equipment shall include the following:

B. Wiring for Furnished Equipment. The wiring from electrical panels, control panels and motor control centers to the furnished equipment shall include all the required materials and installations to complete the wiring as shown on the Drawings, specified and required.

PART 2 - PRODUCTS

2.1 GENERAL

A. Provide basic materials and all wiring installations as indicated, specified and required.

2.2 METAL CONDUITS

A. Conduits shall be steel, hot-dipped galvanized and equipped with couplings and thread protector caps. The surfaces and threads shall be corrosion-resistant coated. Conduits shall be in ten-foot lengths and manufactured by Jones & Laughlin Steel Co., Allied Tube & Conduit Co., Triangle PWC, Republic, Youngstown, or approved equal. Conduits shall be a minimum size of 3/4 inch. Supports shall be provided for all conduits.

B. Rigid Steel Conduit shall be provided for all exposed exterior installation unless otherwise indicated and/or specified.

C. Electrical Metallic Tubing may be substituted for rigid steel conduit on the interior of the control building unless otherwise indicated and/or specified.

2.3 PVC COATED - METAL CONDUITS

A. The PVC coated galvanized rigid conduit must be UL Listed. The PVC coating must have been investigated by UL as providing the primary corrosion protection for the rigid metal conduit. Ferrous fittings for general service locations must be UL Listed with PVC as the primary corrosion protection. Hazardous location fittings, prior to plastic coating must be UL listed. All conduit and fittings must be new, unused material. Applicable UL standards may include: UL 6 Standard for Safety, Rigid Metal Conduit, UL514B Standard for Safety, Fittings for Conduit and Outlet Boxes.

B. The PVC coated galvanized rigid conduit must be ETL Verified to the Intertek ETL SEMKO High Temperature H2O PVC Coating Adhesion Test Procedure for 200 hours. The PVC coated galvanized rigid conduit must bear the ETL Verified PVC-001 label to signify compliance to the adhesion performance standard.

C. The conduit shall be hot dip galvanized inside and out with hot galvanized threads.

D. A PVC sleeve extending one pipe diameter or two inches, whichever is less, shall be formed at every female fitting opening except unions. The inside sleeve diameter shall be matched to the outside diameter of the conduit.

E. The PVC coating on the outside of conduit couplings shall have a series of longitudinal ribs 40 mils in thickness to protect the coating from tool damage during installation.

F. Form 8 Condulets, 1/2” through 2” diameters, shall have a tongue-in-groove gasket to effectively seal against the elements. The design shall be equipped with a positive placement feature to ease and assure proper installation. Certified results confirming seal performance at 15 psig (positive) and 25 in. of mercury (vacuum) for 72 hours shall be available.

G. Form 8 Condulets shall be supplied with plastic encapsulated stainless steel cover screws.

H. A urethane coating shall be uniformly and consistently applied to the interior of all conduit and fittings. This internal coating shall be a nominal 2 mil thickness. Conduit or fittings having areas with thin or no coating shall be unacceptable.

I. The PVC exterior and urethane interior coatings applied to the conduit shall afford sufficient flexibility to permit field bending without cracking or flaking at temperatures above 30°F (-1°C).

J. All male threads on conduit, elbows and nipples shall be protected by application of a urethane coating.

K. All female threads on fittings or conduit couplings shall be protected by application of a urethane coating.

L. Independent certified test results shall be available to confirm coating adhesion under the following conditions.
   1. Conduit and condulet exposure to 150°F (65°C) and 95% relative humidity with a minimum mean time to failure of 30 days. (ASTM D1151)
   2. The interior coating bond shall be confirmed using the Standard Method of Adhesion by Tape Test (ASTM D3359).
   3. No trace of the internal coating shall be visible on a white cloth following six wipes over the coating which has been wetted with acetone (ASTM D1308).
   4. The exterior coating bond shall be confirmed using the methods described in Section 3.8, NEMA RN1. After these tests the physical properties of the exterior coating shall exceed the minimum requirements specified in Table 3.1, NEMA RN1.

M. Right angle beam clamps and U bolts shall be specially formed and sized to snugly fit the outside diameter of the coated conduit. All U bolts will be supplied with plastic encapsulated nuts that cover the exposed portions of the threads.

N. Installation of the PVC Coated Conduit System shall be performed in accordance with the Manufacturer’s Installation Manual. To assure correct installation, the installer shall be certified by Manufacturer to install coated conduit.

O. Type 304 stainless steel screws shall be furnished and used to attach the cover to the conduit body. All coated material shall be installed and patched according to the manufacturer’s recommended installation and patching instructions.

P. Conduit straps shall be PVC coated or stainless steel.

Q. Approved Material: PVC coated galvanized rigid conduit and Fittings as manufactured by Plasti-Bond, Perma-Cote, Kor Kap, or approved equal.

2.4 NONMETALLIC CONDUITS

A. Nonmetallic conduits shall be Schedule 40 polyvinyl chloride as manufactured by Triangle Conduit & Cable, Carlon, or approved equal. All conduits shall be of one type, and low temperature, corrosion, and moisture resistant.

B. Nonmetallic Conduit may be installed for underground conduit runs which are outside of the buildings and structures and run between buildings and structures. Rigid steel bends and risers shall be used with nonmetallic conduit wherever conduit rises above grade.

Each nonmetallic conduit shall contain a code sized grounding conductor.

2.5 FLEXIBLE CONDUIT

A. Liquid-tight flexible metal conduit shall be provided for short connections to equipment as shown on the drawings and as required which withstand temperatures from -50Degrees Fahrenheit to +220Degrees Fahrenheit.

B. Liquid-tight Conduit shall have an interlocked flexible galvanized steel core with a permanently bonded exterior gray polyvinyl chloride jacket.

C. Conduits, l-l/4 inch and smaller shall have an internal copper bonding conductor wound spirally in the space between each convolution for the equipment ground provided by the manufacturer.

D. Separate Ground Conductor shall be provided by the Contractor in liquid-tight flexible conduits that do not have the internal copper bonding conductors included by the manufacturer.

E. Manufacturers for liquid-tight flexible conduit shall be Anaconda, Electri-Flex, Universal or Approved equal.

2.6 CAST METAL BOXES AND FITTINGS

A. Provide conduit outlet bodies, boxes, fittings, gaskets and covers for lighting outlets, lighting switches, receptacles, control stations, alarm, switch and thermostat outlets, etc. in exposed conduit installations as indicated and required. Cast boxes and fittings shall be finished as specified in Section 16000. The outlet bodies, boxes, fittings and covers shall be cast iron alloy with threaded hubs, and of sufficient size to provide free space for all conductors that shall be enclosed. The materials shall be manufactured by Crouse-Hinds, Appleton, Pyle-National Efcor, or approved equal.

B. Covers and Gaskets shall be provided for all conduit outlet bodies, boxes and fittings. The covers shall be cast iron alloy and equipped with neoprene gaskets.

C. PVC Coated Fittings shall have the same polyvinyl chloride coating that is on the conduit to which they shall be connected. The PVC coating shall be bonded to the surfaces of cast outlet bodies, boxes, fittings and supports by Occidental Coating, Kor-Kap, Robroy, Youngstown, or approved equal.

D. Plastic Fittings shall be solvent weld type, and shall match the conduit to which they shall be connected.

E. Expansion/Deflection Fittings shall be provided as indicated, specified and required. The fittings shall permit movement between two conduits without damage to the conduits and conductors. The expansion/deflection fittings consist of cast metal conduit hubs securely attached to a flexible outer neoprene jacket. A flexible copper grounding strap shall be provided inside the fitting and connected to the two hubs. The linear expansion or contraction shall be a movement up to 3/4 inch. The linear misalignment shall be a movement up to 3/4 inch. The angular misalignment shall be a movement up to 30 degrees. The expansion/deflection fittings shall provide flexible and watertight conduit joints.

F. Thread Lubricant shall be provided for all metal conduit threads. The lubricant shall inhibit corrosion and maintain grounding continuity, and shall be Crouse-Hinds STL, Thomas and Betts "Koper-Shield" or approved equal.

G. Couplings and Elbows shall be of the same type as the conduit to which they shall be connected, except where rigid steel bends and risers are connected to nonmetallic conduits where conduits rise above grade. For metallic conduits, the couplings and elbows shall be steel, hot dipped galvanized, threaded and one-piece. For plastic conduits, couplings and elbows shall have plain ends for tight weld fits, which form watertight joints.

2.7 STEEL BOXES AND FITTINGS

A. Provide the steel boxes and fittings as indicated and required.

B. Pull Boxes shall be of sufficient size to accommodate the connected conduits and enclosed conductors. Boxes 24 inches square and smaller shall have gasketed screw type covers. Larger boxes shall have bi-parting gasketed hinged doors with latch mechanisms, handles and cylinder locks complete. Provide two keys for each lock. Pull boxes shall be painted as specified in Section 16000 and 16118. The pull boxes shall be Hoffman, Boss, Circle A-W, or approved equal.

2.8 WATER SEAL FITTINGS

A. Provide the malleable iron water seal fittings connected to rigid steel conduits as indicated, specified and required.

B. Sealing Bushings shall be provided on the ends of exterior underground conduits that terminate at indoor equipment. The bushing shall consist of a thick neoprene sealing ring secured between two metal plates by socket head screws. When the conduit sealing bushing is in place and the screws are tightened, the neoprene shall become compressed between the metal plates and be forced against the conduit inside wall and also against the conductor insulation to form a watertight seal inside the conduit.

C. Wall and Floor Seals shall be provided to completely seal the areas around the conduits that pass through concrete walls and floors. Seals shall have a neoprene grommet between two pressure rings, which provides a watertight seal on the outer surface of the entering conduits.

2.9 CONDUIT FITTINGS

A. Provide all the hot-dip galvanized steel and iron conduit fittings required to complete the wiring installations.

B. Liquid-tight Conduit Fittings shall be Types LT, ST, CT as manufactured by Crouse-Hinds, Appleton, Pyle-National or approved equal.

C. Union shall be provided, as required, for conduit connections to threaded outlet bodies, boxes, and equipment, for connecting two steel conduits together. Unions shall be type UNY or UNF. Running threads are not acceptable. Union shall be Appleton, Crouse-Hinds, Pyle-National or approved equal.

D. Bushing Reducers shall be provided in conduit fitting hubs for connections to smaller conduits. Reducers shall be Appleton, Thomas and Betts, Efcor or approved equal.

E. Conduit Enlargers shall be provided for connecting two conduits of different sizes together. The enlargers shall be Appleton, Thomas and Betts, Efcor or approved equal.

F. Locknuts shall be provided on the threads of conduits that enter through close fitting openings in enclosures. Locknuts shall have notches all around for tightening with a screwdriver. Locknuts shall be Appleton, O-Z, Thomas and Betts or approved equal.

G. Metallic Insulated Bushings with ground terminals shall be provided on the ends of threaded steel conduits and nipples that terminate through openings in sheet steel enclosures. The malleable iron grounding bushings shall have smooth and well-rounded surfaces to protect the conductor insulation. The conduit threads shall be deep, clean and easily attached to the conduits. The bushings shall be O-Z, Efcor, Thomas and Betts or approved equal.

H. Plugs shall be the recessed type and installed in all unused conduit fitting hubs and couplings. Plugs shall be Appleton, Crouse-Hinds or approved equal.

I. Interchangeable Hubs shall be provided for rigid steel conduit connections to sheet steel enclosures. The interchangeable hub shall have an insulated throat, sealing ring and

vibration-proof nut. Machined serrations on hub and nut shall bite into the metal enclosure assuring an equipment ground. The hubs shall be Myers "Scru-Tite," "Efcor" "Space-Saver", or approved equal.

2.10 CONDUCTORS AND CABLES

A. Conductors and cables shall be new, single conductor, copper, not smaller than #12 AWG (except fixture wire or control power conductors) unless otherwise indicated, and as shown on the Drawings. No running splices will be allowed for new conductor installations. Where modifications to existing conductor runs, and conductors are unable to be replaced, an acceptable means of splicing would be to use STA-KIN butt splice or equal, with heat shrinkable insulating cover (T&B cat #H5 or equal). Use calibrated T&B #WT1455 ratchet tool for compression of terminal at all STA-KON terminals and connectors.

B. Steel Interlocked Armor cables shall be provided for power circuits to the motors when called for on the Drawings. The cables shall be 600 volts, three conductor, rated 90 degrees centigrade and stranded copper. The conductors shall be individually polyethylene insulated, grouped together with fillers and ground wires, and covered with binding tape. The cable shall be enclosed in an interlocked aluminum or galvanized steel armor that shall be protected with a polyvinylchloride outer jacket. The interlocked armor cables shall be approved for submersible pump power wiring installations. The power cables shall be manufactured by General Electric, Okonite, Cyprus or approved equal. The power cables shall be securely attached to steel messenger cables with stainless steel binding tape as shown on the Drawings unless otherwise indicated.

C. Conductors 250MCM and Larger shall be stranded, 600 volts, ethylene propylene rubber insulation, Type RHW or XHHW-2. Conductors shall be manufactured by Rome, American Insulated Wire Co., Cablec Co., or approved equal.

D. Conductors smaller than 250MCM shall be stranded, 600 volt and Type XHHW-2. Conductors shall be manufactured by Rome, American Insulated Wire Co., Cablec Co., or approved equal.

E. Ground and Neutral Conductors shall be provided for the required ground and neutral wiring.
   1. The insulated ground and neutral conductors shall be the same type as the phase conductors.
   2. Bare ground conductors shall be copper, soft drawn, annealed, concentric lay, stranded conforming to ASTM Specifications B3 and B8.

F. Fixture Wires shall be rated 900 centigrade, #16 AWG stranded, thermoplastic insulated with an outer jacket. The wire shall be Type TFFN and manufactured by Brand-Rex, Carol Cable, or approved equal.

G. Control power conductors shall be type XHHW stranded #14 gauge with manufacturer sequential number identification on exterior of insulation jacket.

H. Instrumentation Signal Cables shall be Type TC single twisted pair or multi twisted pairs of stranded, copper cables with 600-volt, 15 mil polyvinyl chloride insulation over each conductor, overall aluminum-mylar tape shield, overall tinned copper drain wire and 45 mil minimum polyvinyl chloride jacket overall, 90Degree centigrade (dry/75 centigrade wet rating. Twisted pair cables that

   are required to be shielded, shall have aluminum-mylar tape shields and tinned copper drain wires over individual twisted pairs of cable. Single twisted pair cables shall be #16 AWG minimum. Cables shall be manufactured by Belden, Okonite, or approved equal.

I. Wire Lubricant shall be provided to ease the pulling of cables and conductors in conduits. The lubricant shall be Aqua Gel, Polywater or approved equal. “Yellow 77” is not acceptable.

2.11 WIRE CONNECTORS

A. Connectors shall be provided for splices and terminal connections of all copper conductors and cables. The connector shall fit the conductor to which it shall be connected, and the assembly shall have joint contact surfaces not less than 50 percent.

B. High voltage conductors (480V) shall be terminated in junction boxes using appropriately sized Weidmuller terminal blocks, color coded (green = grounding conductors, white or gray = neutral/grounded conductors, black red or blue for medium voltage (120V-240V) and brown, orange and yellow for high voltage conductors (480V).

C. Compression Connectors for No. 8 AWG and larger shall be copper lugs for terminal connections, and two-way copper sleeves and taps for splice connections. A crimping tool shall be provided to make tight and neat compression connections. The connectors and crimping tool shall be Anderson-Square D, Thomas and Betts, Buchanan or approved equal.

D. Tapered Spring Connectors shall have live springs attached to inner steel housings and enclosed with plastic insulators. Connectors shall be provided for No. 10 AWG conductors and smaller, and shall be Buchanan Type B2, Scotchlok Type B, Thomas and Betts Type PT or approved equal.

E. Ground Clamps shall be provided for cable connections to ground rods and metal pipes as shown on the Drawings. Clamps shall be copper alloy, heavy duty, corrosion resistant and consist of U-bolts and saddles with bolted cable connections. The ground clamps shall be O-Z, Thomas and Betts Burndy or approved equal.

F. Electrical Tape shall be plastic, 0.007 inches thick, and resistant to abrasion, alkalies, acids, corrosion, moisture, low and high temperatures. The tape shall be Scotch No. 33 Plus, Plymouth Premium Black No. 4453 or approved equal.

G. Wire Markers shall be provided to identify each conductor at equipment terminals, and in intermediate junction boxes, pull boxes, handholes and manholes. At motor control centers and control panels, identify each motor or other electrical device circuit conductor with the motor or device number shown on the drawings and with the terminal number of the motor control center or control panel to which the conductor is connected. At motor and device terminals, at control stations, and in junction boxes, pull boxes, handholes and manholes, identify each motor or device circuit conductor with the terminal number of the motor control center or control panel to which the conductor is connected. In addition to identifying each conductor with the terminal number, in junction boxes, pull boxes, handholes and manholes, identify each group of conductors forming a motor or device circuit with the motor or device number shown on the drawings. At panelboards, junction boxes, pull boxes, handholes and manholes, identify each panelboard circuit conductor with the panelboard number and circuit number. The individual conductor wire markers shall be adhesive and manufactured by Thomas and Betts, Brady, Scotch 3M or approved equal. The wire marker to identify groups of conductors shall be nylon cable tie markers as manufactured by Brady, Seaton, Thomas and Betts, Panduit or approved equal. The marker pads on the cable tie markers shall be large enough to show the motor or device numbers. The motor or device numbers on the cable tie markers shall be 3/16-inch-high minimum and shall be applied to the marker pads using marking pens for the purpose which shall be provided by the manufacturer of the cable tie markers. When a device is not numbered on the drawings, use a short descriptive title or assign numbers and provide the Owner with a list of the devices and assigned numbers. Electrical devices include items such as solenoid valves, vibrators, horns, heaters, analyzers, computers, instruments, etc.

2.12 PANELBOARDS

A. Panelboards shall be factory assembled, metal enclosed, dead front and equipped with

bus, time switches, contactors, terminals and thermal-magnetic molded case circuit breakers as shown on the drawings.

B. Circuit Breakers shall be molded case, quick-make, quick-break, single and multipole, and bolted type. Each circuit breaker shall have clear indications for "ON," "OFF", and "TRIP" positions. The minimum interrupting capacity shall be 10,000 symmetrical amperes at 240 volts. As indicated, provide devices to lock the branch circuit breaker in the "ON" and "OFF" positions. Ground fault protection, 5 milliampere sensitivity, shall be provided for the indicated 120-volt branch circuits, which shall be an integral part of the regular branch breaker. A single pole circuit breaker with integral ground fault circuit interruption shall require no more panelboard branch circuit space than the regular single pole circuit breaker.

C. Copper Bus shall be provided for panelboards. Bus shall be provided for the complete length of the panelboard branch circuit area including circuits indicated as spaces. Bus bars shall be drilled and tapped for the indicated spaces for installation of future circuit breakers.

D. Single Phase Panelboards, three wire, shall be bussed so that any two adjacent single-pole breakers shall be connected to opposite polarities. A single handle two-pole circuit breaker can be installed in any location, and in place of two adjacent single pole breakers.

E. Terminals and connectors shall be provided for the feeder, neutral and branch conductors shown on the Drawings.

F. Circuit Numbers shall start at the top of the panelboard. Odd numbers shall be assigned in sequence on the left side, and even numbers shall be in sequence on the right side of the panelboard.

G. The Cabinet shall enclose the bus and breaker assembly, and shall be steel fabricated and coated with corrosion-resistant finish as specified in Section 16000 and 16160. The front of the panelboard shall include a trim, hinged door, flush cylinder lock with catch. The lock shall be furnished with two keys, and all locks shall be keyed alike. Fronts shall not be removable when the door is in the locked position.

H. Contactors shall be provided as indicated and specified in this Section.

I. Metal Circuit Directory frame and card with clear plastic covering shall be provided on the inside of the door. The directory card shall provide a space at least 1/4-inch high and 3 inches long for each branch circuit. The card shall be completely typed to identify each connected and spare circuit.

2.13 MOTORS AND CONTROLS

A. The motors shall be furnished and installed with the driven equipment as indicated and specified per plans.

B. Motor Wiring shall be provided as shown on the Drawings. Include the wiring interconnections between the motors, motor starters, control panels and controls as required.

C. Control Power shall be 120 volts, single phase and 60 hertz unless otherwise indicated. A separate control transformer shall be provided for each motor magnetic starter, contactor and grouped relays as indicated.

D. Contactors shall be provided for circuits as shown on the Drawings, specified and required. The contactor shall be electrically held unless otherwise indicated, 600-volt, 60 hertz, industrial duty, and connected to 120 volts AC circuit with remote control device. The drawings shall indicate the number of poles and ampere ratings for the contactors and the locations, which shall be mounted inside motor control centers, panelboards or separate metal enclosures as indicated. Enclosures shall be finished as specified in

Section 16000 and 16160. The silver alloy power contacts shall be load break within the rating of the contactor without assistance from additional arcing contacts. The magnetic coil shall be continuous duty, encapsulated and easily removable. The magnet shall provide rapid action on pickup or dropout and satisfactory operation without hum. The 120-volt circuit shall be provided by an individual control power transformer for each contactor. The contactors shall be Square D Class 8903, Cutler-Hammer Type C30, Allen-Bradley Bulletin 702 or approved equal.

2.14 OVERCURRENT PROTECTION

A. Circuit breakers, fuses, relays and other protective devices that protect the conductors and equipment against overload currents and short circuit currents shall be provided as indicated, specified and required. The circuit breakers shall be coordinated as specified in this Section and Section 16000 and 16141.

B. Circuit Breakers shall be molded case type unless otherwise indicated. Breakers shall be quick-make and quick-break on manual or automatic operation. The drawings shall indicate the number of poles and ampere trip ratings. The handle mechanism shall be trip-free which prevents holding the contacts against overload or short circuit conditions.

1. The thermal device shall provide time-delay tripping on overloads, and the magnetic device shall provide instantaneous tripping on short circuits. The instantaneous magnetic trip shall be adjustable and accessible from the front of the circuit breaker on frame sizes above 100 amperes. Non-automatic breakers shall have no tripping devices, and shall be used for manual switching of circuits. Molded case thermal-magnetic circuit breakers shall have at least the following interrupting capacities in symmetrical amperes at 480 volts unless otherwise indicated.
   a. 100 Ampere Frame - 22,000.
   b. 225 Ampere Frame - 22,000.
   c. 400 Ampere Frame - 30,000.
   d. 600 Ampere Frame - 30,000.
   e. 800 Ampere Frame - 30,000.
   f. 1,000 Ampere Frame - 30,000.
   g. 1,200 Ampere Frame - 30,000.
   h. 2,000 Ampere Frame – 65,000.
   i. 2,500 Ampere Frame - 65,000.
   j. 4,000 Ampere Frame - 65,000.
2. Solid state circuit breakers shall be equipped with programmers, integral current sensors, logic and trip circuitry, sensor-powered shunt trips and integral ground fault protection. The programmer shall include silicon transistors, silicon diodes, silicon-controlled rectifiers and printed circuitboards to assure the circuit breaker's reliability and stability. Each printed circuit board shall be given a protective epoxy coating to prevent moisture absorption, fungus growth and signal leakage. Gold plated surfaces shall be provided on all electrical connectors and adjustment taps. Sensing power and signals shall be derived from three current transformers inside the circuit breaker, which shall supply power to the solid-state programmer. The trip shall utilize logic circuitry contained in the programmer. The ampere setting shall be a tap adjustment which selects the continuous current setting of the breaker. These tap adjustments shall be made with knobs on the front of the programmers. Regulated d-c power shall be provided by the full wave rectifiers and filters in the power supply. There shall be individual signals from the programmer which shall trip the breaker on overloads, short circuits, ground faults and high temperatures. The interrupting capacity for the solid-state circuit breaker shall be 100,000 symmetrical amperes at 480 volts, unless otherwise indicated. It shall be possible to lock the operator handle in the "off" position with a padlock.

3. Molded plastic housings that contain standard molded case circuit breakers and current limiters connected to the load side of the breakers shall be provided as indicated. The circuit breaker shall be ambient temperature compensated, and shall be provided with thermal overload protection. The integrally fused circuit breaker shall be capable of interrupting short circuit currents up to 100,000 symmetrical amperes at 480 volts, unless otherwise indicated. The time current limiting characteristics of the fuses shall be coordinated with the time current tripping characteristics of the circuit breaker. The fuse limiters shall be individually interlocked with the breaker element tripping mechanism so that no fuse can be inserted or removed until the circuit breaker is in the "off" position. An interlock shall be provided so the circuit breaker cannot be closed if a fuse limiter is either missing or has blown. Fuse limiters shall be individually removable from the molded case housing. It shall be possible to lock the operator handle in the "off" position with a padlock.
4. Motor circuit protectors shall be provided as shown on the drawings. They shall be molded case magnetic-trip-only circuit breakers. Each pole shall provide instantaneous protection by means of a single adjustable magnetic element that trips all currents equal or above the trip setting. The single adjustment screw shall adjust all poles simultaneously. Tripping shall be clearly indicated by the handle automatically assuring a position midway between the manual "OFF" and "ON" positions. All poles shall be constructed to open, close and trip simultaneously. The contacts shall be of non-welding silver alloy. It shall be possible to lock the operator handle in the "OFF" position with a padlock.
5. As indicated, motor circuit protectors shall be provided with current limiters having an interrupting capacity of 100,000 amperes, unless otherwise indicated. The MCP and limiter shall be fully coordinated so the motor circuit protector shall open all three poles if the limiter operated. The current limiters shall be so constructed that they can only be replaced by an identical or similar limiter having the same interrupting capacity. It shall be possible to lock the motor circuit protector handle in the "OFF" position with a Padlock.
6. The circuit breakers shall be mounted inside low voltage switchgears, motor control centers, switchboards or separate metal enclosures as indicated. Breakers shall be equipped with indications for the "trip","on", and "off" positions, and connectors that fit the conductors shown on the drawings. Submittal shall include complete descriptive data, technical data and manufacturers Certified Test Reports for circuit breakers 600 amperes and larger. The molded case circuit breakers shall be manufactured by Square D, Allen Bradley, Cutler Hammer, Siemens, General Electric, or approved equal.

C. Fused Switches shall be provided in metal enclosures that are suitable for locations shown on the Drawings. Each switch shall be industrial type, heavy duty, horsepower rated, quick-make, quick-break and equipped with fuses, cover-handle interlock, "ON-OFF" indications and feature to lock the operating handle in the "OFF" position. The drawings shall indicate the volts, amperes and number of poles. The switches shall include connectors that shall fit the conductors shown on the drawings. The fuses shall be Fusetron or Low-peak dual-element type and capable to interrupt 200,000 amperes, unless otherwise indicated. Ratings for volts and amperes shall be shown on the drawings. The enclosure shall be finished as specified in Section 16160. On the front of the enclosure, attach a plastic nameplate that identifies the load. The fused switches shall be manufactured by Square D, Allen Bradley, Cutler Hammer, Siemens, General Electric, or approved equal.

D. Overload Relays shall be provided in each phase of all circuit breakers and magnetic starters to properly protect the conductors and equipment that shall be connected on the circuits. Provide one spare overload relay for each overload relay provided.

E. Overcurrent Protection Device Coordination. All overcurrent protection devices on this

project shall be coordinated so that they will perform as follows:

1. When two or more overcurrent protective devices in series with each other experience current flow greater than their rated current, the device with the lowest rated current shall trip and/or open the circuit first and thereby prevent the higher rated devices from operating.
2. The Supplier of the circuit breakers shall prepare a coordination study to verify the above stated performance requirements. The study shall be documented by the Supplier and the documents shall include but not be limited to the following:
   a. Manufacturer's overcurrent device operating curve printed on transparent paper for each overcurrent device. In the case of fuses, both minimum melt and maximum clearing time curves shall be included.
   b. One reproducible copy of all project single line diagrams so marked to show which operating curve applies to each overcurrent device on the diagram (the operating curves shall also be correspondingly marked).
   c. A tabulation of the required settings of all of the adjustable overcurrent devices so that the performance requirements is met. This documented coordination study shall be submitted for review before the overcurrent devices are supplied for the project. Circuit breakers which have ground fault protection features are specifically required to meet this performance requirement.

2.15 WIRING DEVICES

A. Receptacles and switches shall be specification grade, heavy duty and provided in galvanized steel and cast metal boxes with covers as identified and located on the drawings. Unless otherwise indicated, the device phenolic color shall be ivory for all flush duplex receptacles and local switches, and their coverplates. Unless otherwise indicated the device phenolic color shall be brown for all duplex receptacles and local switches which are installed in surface mounted boxes. Galvanized steel boxes shall be installed in the walls for flush devices. All surface device outlets shall have cast iron boxes.

B. Convenience Receptacles, for exterior installations, shall be single, grounding type, polarized, NEMA 5-15R, rated 20 amperes and 125 volts AC, and shall have side screw terminals for copper wire unless otherwise indicated equipped with ground fault capabilities. The metal coverplate shall attach to the box with corrosion resistant screws. The plug opening in the coverplate shall have an ethylene propylene rubber gasket. Attached to the coverplate shall be a stainless-steel hinge-spring metal cover. The receptacles shall be ivory and manufactured by Hubbell, Slater, P&S, Arrow Hart, General Electric or approved equal. The convenience outlet shall be weatherproof with the hinged cover closed. Also, the outlet shall be weatherproof with the hinged cover open and a cord plug attached to the receptacle. The coverplate shall be manufactured by Crouse-Hinds, Appleton, Intermatic or approved equal.

C. Local and Weatherproof Switches shall be toggle type, rated 20 amperes and 120-277 volts AC, and equipped with side screw terminals for copper wire. Single pole switches shall be #1221, #1991, #4901 brown and ivory. Three-way switches shall be #1223, #1993, #4903 brown and ivory. The switches shall be manufactured by Hubbell, Slater, P&S, Arrow Hart, General Electric or approved equal.

2.16 DISCONNECT SWITCHES

A. Provide the non-fusible disconnect switches, as indicated, specified and required.

B. Switches shall be steel enclosed, heavy duty, NEMA 1 and NEMA 3R as required, 2-pole and 3-pole, 250 volt and 600-volt, ampere rating as indicated, and finished as specified in Section 16000. On the front of the enclosure, attach a plastic nameplate that identifies the load. Disconnect switches shall be manufactured by Square D, Allen Bradley, Cutler Hammer, Siemens, General Electric, or approved equal.

C. Mechanisms shall have quick-make and quick-break operating handles and provisions for padlocking in the "OFF" position. The switch shall have an interlock to prevent unauthorized opening of the hinged cover when the switch is in the "ON" position, and an interlock to prevent closing the switch mechanism with the hinged cover open.

D. Copper Lugs shall be included for the copper wire connections. The lug shall fit the conductor which shall be connected to the lug.

2.17 SUPPORTS

A. Provide the galvanized and PVC coated metal channels, fittings, stanchions, clamps, hangers, and required hardware to support all conduit and equipment as required.

B. Channels shall be steel and cold rolled. One side of the channel shall have a continuous slot. On both sides of the slot, the edges turn inward and forms a guide for the spring nuts. The fittings shall be fabricated from steel and attached to the channel with bolts and spring nuts. The channel, fittings and hardware shall be hot-dipped galvanized and manufactured by Unistrut, GTE Products Co., Ideal Industries, Josyln Mfg & Supply Co., or approved equal.

C. One-Hole Clamps shall be malleable iron, galvanized for steel conduits and equipped with clamp-backs. The clamps shall be Efcor, Thomas and Betts, Appleton or approved equal.

D. Beam Clamps shall be malleable iron, galvanized, right angle and parallel types. The clamps shall be manufactured by Efcor, Thomas and Betts, Appleton or approved equal.

E. Spacers shall be plastic and provided to support underground conduits for concrete encasements. The spacers shall be Carlon, Johns-Manville, Underground Products or approved equal.

F. Steel Anchors shall be sleeve and stud types for securing equipment to concrete foundations, floors and walls. The anchors shall be Phillips "Red Head", Diamond or approved equal. Concrete foundation to include 4” housekeeping pad.

G. Toggle Bolts shall be steel, spring wing type for securing equipment to hollow walls and ceilings. Toggle bolts shall be Phillips "Red-Head", Diamond or approved equal.

H. Conduit Hangers shall be heavy gauge formed steel, galvanized and equipped with carriage bolts, 1/4-inch rods and nuts. The hangers shall be Efcor, Appleton, Ideal Industries, Josyln Mfg & Supply Co. or approved equal.

I. U-Bolts shall be heavy gauge steel, galvanized and equipped with two hexagon steel nuts. The U-bolts shall be Efcor, Kindorf or approved equal.

J. Hardware shall be provided to securely attach all equipment and materials.

2.18 NAMEPLATES

A. Nameplates shall be provided as indicated to identify equipment, and the positions and circuits within the equipment. Also, individually enclosed equipment shall be provided nameplates as indicated.

B. The Nameplates shall be laminated black plastic with 1/4-inch-high white letters, NEMA ES-1, 3-ply, 1/l6-inch thick, beveled and satin finished. Nameplate inscriptions shall include the identifications for the equipment and loads and shall identify the controls on control equipment as shown on the Drawings.

C. Plastic Nameplates shall be provided for switchgears, motor controllers, substations, service equipment, switchboards, motor control centers, panelboards, and individually enclosed circuit breakers, disconnect switches, magnetic starters, relays, manual starters and control stations unless otherwise indicated. Provide lighting switch nameplates as indicated on the Drawings.

PART 3 - EXECUTION

3.1 GENERAL

A. Provide the wiring installations and equipment installations, including connections and interconnections as indicated, specified and required. Assure proper fits for all equipment and materials in the spaces shown on the Drawings.

B. Excavations and backfills. Earthwork shall be performed for equipment foundations, supports and underground conduits as indicated and as specified.

C. Concrete shall be provided for electrical equipment foundations, support foundations and conduit encasements as indicated and as specified. Concrete foundation to include 4” housekeeping pad.

D. Painting. Painting shall be provided all for exterior exposed surfaces. Field damaged finishes on equipment shall be touched-up with paint that is equal in quality and color to the original. Finish shall be Desert Beige as approved by the OWNER.

3.2 RACEWAYS

A. Provide all the cable tray and conduit installations, including the outlet bodies, boxes, gaskets, covers, fittings and supports to complete the raceway systems as shown on drawings and as required. Install ground conductors in all non-metallic conduits.

B. Exposed Installations. The installations shall be completed with hot-dipped galvanized cable trays, rigid steel conduits and intermediate steel conduits with wrench tight connections. In hazardous areas, only rigid steel hot-dipped galvanized conduits shall be installed. In corrosive areas, PVC coated galvanized rigid steel conduits shall be installed. Maintain a minimum clearance of 12 inches for conduits that shall be installed near hot pipes or surfaces (150 Degrees Fahrenheit or higher). Exposed conduits shall be installed parallel or perpendicular to buildings and structures.

C. Flexible Conduits. Flexible conduits shall be liquid-tight with fittings for short tight connections (30 inches maximum) to equipment, except in Class 1, Division 1 areas. A separate ground conductor shall be installed in flexible conduit that does not have the internal copper bonding conductor included by the manufacturer.

D. Flexible Couplings. The couplings shall be explosion-proof with fittings for short, flexible, tight connections to equipment in Class 1, Division 1 hazardous areas.

E. Threads. All steel conduit threads shall be coated with a corrosion resisting lubricant, and the connections shall be made watertight. The lubricant shall maintain the grounding continuity.

F. Locknuts and Bushings. Locknuts and bushings shall be installed on the threads of steel conduits that enter through close-fit openings in enclosures.

G. Sealing Bushings. The bushings shall be installed on the ends of exterior conduits that terminate at indoor equipment. The bushing shall provide a water-tight seal inside the conduit.

H. Seal Fittings. Seal fittings shall be connected to rigid steel conduits in hazardous areas to prevent gases and flames to pass from one area to another through the conduit system. Also, sealing fittings shall be installed to completely water seal inside conduits and the areas around steel conduits that pass through concrete floors and outside walls.

I. Expansion/Deflection Fittings. Expansion/Deflection fittings shall be connected to steel conduits as indicated and required.

J. Penetrations. Penetrations through concrete for sleeves and conduits shall be approved by the Owner. Submit the sizes, locations and methods for all penetrations.

K. Stub-ups. All steel conduit stub-ups shall be painted per requirements in Pertinent Sections. Conduits shall be painted a minimum of 4 inches above and below concrete slabs. Finish shall be applied before concrete is poured. Identify spare stub-ups under control panels, motor control centers and switchboards with tags as to the location of the termination of the conduit at the other end.

L. Terminations. Conduits entering equipment, including control panels, motor control centers, switchboards, etc. shall enter in the same vertical section in which the circuit will terminate. Tag conduits at each end for identification.

M. Tool Marks. Conduits and fittings that have tool marks shall be smoothed and finished with paint that matches the original finish.

N. Conduit Through Roof. Provide a watertight seal around the conduit on the roof Coordinate the work with the roofing contractor.

O. Furnished Equipment. Provide conduit installations as shown on the Drawings, and specified in other Sections of the Specifications for furnished equipment.

P. Alterations. Alterations to existing installations shall be completed as indicated and specified.

3.3 BOXES AND FITTINGS

A. Outlet bodies, boxes, gaskets, covers, fittings and supports shall be installed as indicated, specified and required.

B. Cast Iron. Cast iron outlet bodies, boxes, gasketed covers and fittings shall be connected to exposed galvanized rigid steel conduits.

C. Sheet Steel. Sheet steel boxes shall be provided with close-fit holes for steel conduit connections. Weatherproof boxes shall be provided with interchangeable conduit hubs for steel conduit connections as indicated.

D. Interchangeable Hubs. The hubs shall be installed in steel enclosures for rigid steel conduit connections. Cut a close-fitting hole in the sheet steel enclosure and place the interchangeable hub in the opening. Connect the hub on the conduit and make a tight connection to the enclosure.

E. The purpose of all circuits shall be legibly identified at the panel, receptacles, junction boxes and equipment in a permanent manner (i.e. Etched Plates, Conductor Tag, Permanent Marker, Etc.). The labeling shall include panel circuit number, “To” and “From” identification and marked “Spare” where applicable.

3.4 CONDUCTORS AND CABLES

A. Install all the conductors and cables for the wiring as indicated, specified and required.

B. Conductors. Conductors shall be completely installed and connected. Apply wire lubricant to ease the pulling of conductors in conduits. Recommended pulling tensions shall not be exceeded. Splice and terminal connections shall be made tight with spring and compression connectors. The connectors shall be crimped with a tool that provides uniform and tight connections. Connectors shall be sized as outlined in paragraph on Wire Connectors in this Section. Include all the required wiring interconnections. When routing conductors and cables through precast concrete pull boxes and manholes, the longest (not shortest) route from entrance to exit shall be used.

C. Insulate. All connections shall be insulated as required with tight wraps of plastic tape. Apply insulation putty to fill irregularities and voids in splices. High and medium voltage cable splices shall be completed as instructed by the cable manufacturer.

D. Furnished Equipment. Provide wiring installations as shown on the Drawings, and specified in other Sections of the Specifications for furnished equipment.

E. The purpose of all circuits shall be legibly identified at the panel, receptacles, junction boxes and equipment in a permanent manner (i.e. Etched Plates, Conductor Tag, Permanent Marker, Etc.). The labeling shall include panel circuit number, “To” and “From” identification and marked “Spare” where applicable.

3.5 PANELBOARDS

A. Install and completely connect all the factory assembled panelboards as shown on the Drawings.

B. Elevation. The elevation to the top of the panelboard shall be six feet above grade unless otherwise indicated.

C. Clearance Space. Provide at least ½-inch clearance between the back of the panelboard cabinet and the RTU Cabinet.

D. Anchor Bolts. Securely attach the panelboard to the wall with anchor bolts.

E. Locking Devices. Attach locking devices on the handles of branch circuit breakers for the “ON” position as shown on the Drawings.

F. Circuit Director Card. Completely type the card to identify each connected and spare circuit.

G. Tight Connections. Provide tight connections for feeder and branch circuit wiring.

3.6 MOTORS AND CONTROLS

A. Install all the wiring and control equipment as indicated, specified and required.

B. Motors. Motors shall be provided with the driven mechanical equipment.

C. Wiring. The wiring installations shall be complete. Include all the required wiring interconnections between the motor magnetic starters, and between the starters and the instrument control panels. Provide motor frame conduit connection boxes as required. Be certain that all wiring connections provide the proper motor rotation.

D. Magnetic Starters. The magnetic starters shall be provided in the motor control centers unless otherwise indicated.

3.7 OVERCURRENT PROTECTION

A. Install all the overcurrent protective equipment as indicated, specified and required.

B. Metal Enclosures. The enclosures for individual equipment shall be constructed to satisfy the condition in the location where they shall be installed.

C. Overload Relays. Overload relays shall be provided in the control equipment for three phase and single-phase circuits as required. Check the full load amperes for each motor and the overload relay rating. Replace the relays that shall not satisfactorily protect the connected motors.

D. Trip Settings. Circuit breakers shall assure the required circuit protection with the indicated trip settings.

E. Fuses. Provide fuses that have the current and voltage ratings to protect the circuits shown on the Drawings.

3.8 WIRING DEVICES

A. Install the required local switches, convenience outlets and clock outlets complete, including the supports and wiring.

3.9 DISCONNECT SWITCHES

A. Provide the complete installations for fused disconnect switches and non-fused disconnect

switches where shown on the Drawings and as required.

B. Mounting Height. Switches shall be installed 5 feet from grade or floor to the top of the enclosure unless otherwise indicated.

C. Connections. The steel enclosures shall be connected complete with steel conduits terminating into interchangeable hubs attached to the enclosures. Wire connectors shall be provided for connecting the copper conductors.

3.10 SUPPORTS

A. Install the required structural channels, brackets, stanchions, U-bolts, clamps, anchors, hangers, fittings and other hardware to securely attach and support all the equipment and conduits.

B. Painting. Brackets, stanchions and other unfinished steel supports shall be painted per requirements of “Painting and Protective Coatings” Section of the Specifications.

3.11 NAMEPLATES

A. Nameplates shall be positioned and lined-up to provide a neat appearance. They shall be attached to the cleaned metal surfaces of enclosures as directed by the OWNER.

B. Nameplates. Nameplates shall be installed on primary interrupters, switchgears, substations, switchboards, service equipment, motor controllers, motor control centers, panelboards, and individually enclosed circuit breakers, disconnect switches, magnetic starters, manual starters, relays and control stations unless otherwise indicated. Install lighting switch nameplates as indicated on the Drawings.

3.12 CHECKING, ADJUSTING AND TESTING

A. Provide the required labor and equipment, and all checking, adjusting and testing operations on the electrical installations.

B. Check all wire terminals shall be checked to assure tight connections.

C. Adjust. Adjust repeat cycle timers, interval timers and time delay relays and other devices so the controls shall operate in the indicated sequence.

D. Wiring Tests. The tests shall be performed to detect wrong connections, short circuits, continuity and grounds. Insulation tests shall be made with a hand crank test instrument on all cables and conductors. NOTE: WARNING. Do not make insulation tests on any conductors either signal or power that are connected to semi-conductor type equipment. Remove the conductors from the equipment before insulation testing; severe damage may result from meggar-type instruments. Power feeders and branch conductors shall be tested phase to phase, and phase to ground. Phase to ground tests on shielded cable shall mean "conductor to shield". After insulation resistance tests have been performed, high voltage and medium voltage shielded cables shall be "hi-Pot" tested in accordance with the current ICEA Standards and the manufacturer's recommendation. Voltage shall be applied and removed in a slow, even manner, and the conductors shall be grounded for at least one minute after the voltage is removed to ensure that no charge remains. Test voltage and application time for the various cables and conductors shall be submitted to the Owner. Correct any defects in the wiring systems.

E. Equipment Tests.
   1. Perform equipment tests as indicated and directed by the manufacturer. Refer to Section 16000 for Manufacturers' Certified Reports on primary interrupters, substations, switchgears, service equipment and motor control centers.

F. Test Data. Test data for equipment, shielded cables and supply voltage shall be submitted to the Owner.

G. Supply Voltage. Test the supply voltage while the normal plant loads are operating. If the

voltage is not within normal limits (plus or minus one percent), notify the power company and request a voltage correction.

H. Operation Tests. Perform operation tests and observe that all loads operate satisfactorily. Refer to Section 16000 for Demonstration and Final Operation Test Plans and Results.

END OF SECTION

SECTION 16111 – CONDUITS

PART 1 – GENERAL

1.1 SCOPE OF WORK

A. Furnish and install conduits as required, and as shown on the Plans. Materials employed shall be as shown on the Plans.

1.2 SUBMITTALS

A. Submit product literature including manufacturer part number, model number, material, size, and specifications. Material shall not be installed until the ENGINEER has reviewed the submittal data.

B. Shop Drawings shall be submitted for review and acceptance showing routing, conduit size, and number and size of wires in each conduit before installation of conduit and any related work.

C. Proposed routing of conduits buried under floor slabs-on-grade.

D. Identify conduit by tag number of equipment served or by circuit schedule number.

E. Proposed routing and details of construction including conduit and rebar embedded in floor slabs, columns, etc. Identify conduit by tag number of equipment served or by circuit schedule number.

F. Proposed location and details of construction for openings in slabs and walls for raceway runs.

G. Refer to Section 16000 and Section 01300 for further submittal requirements.

1.3 REFERENCES

A. American National Standards Institute (ANSI): C80.1, Rigid Steel Conduit Zinc-Coated.

B. National Electric Manufacturers Association (NEMA): RN-1, Polyvinyl-Chloride (PVC) Externally Coated Galvanized Rigid Steel Conduit.

C. Underwriters Laboratories Inc. (UL):
   1. 1, Flexible Metal Conduit.
   2. 6, Rigid Metal Conduit.
   3. 360, Liquid-Tight Flexible Steel Conduit.
   4. 467, Grounding and Bonding Equipment.
   5. 514, Nonmetallic Outlet Boxes, Flush-Device Boxes and Covers.
   6. 651, Schedule 40 and 80 Rigid PVC Conduit.
   7. 870, Wireways, Auxiliary Gutters, and Associated Fittings.
   8. 884, Underfloor Raceways and Fittings.
   9. 886, Outlet Boxes and Fittings for Use in Hazardous (Classified) Locations.

PART 2 – PRODUCTS

2.1 RACEWAYS

A. Underground and/or concrete encased conduits shall be rigid PVC, unless otherwise indicated. Exterior / exposed conduits shall be PVC coated galvanized rigid steel, unless otherwise indicated.

B. All wiring, except as otherwise noted, shall be in conduit. Conduit size shall not be less than the National Electrical Code (NEC) size required for the conductors therein and shall not be smaller than 3/4-inch. No underground conduit shall be less than one inch.

C. Conduit type fittings shall be Crouse-Hinds, Appleton, or equal with wedge nut covers. All conduits located outdoors or in wet locations shall be watertight.

D. In unclassified areas, flexible conduit shall be grounding type, weatherproof, corrosion resistant, and watertight.

E. Couplings, connectors, and fittings shall be standard types specifically designed and manufactured for the purpose. They shall be installed to provide a firm mechanical assembly and electrical conductivity throughout.

F. Expansion fittings shall be OZ type AX with jumper for exposed locations and type DX at structural expansion joints, Spring City, or equal. Conduits shall have expansion fittings in accordance with NEC.

G. The conduits and fittings shall be supported per NEC requirements as a minimum.

2.2 GALVANIZED RIGID STEEL (GRS) [ALSO REFERRED TO AS “RGS”]

A. Conduit and couplings shall be hot-dipped galvanized with zinc coated threads and outer coating of zinc bichromate, in accordance with ANSI C80.1 standards, as manufactured by Jones & Laughlin Steel Corporation, Allied Tube & Conduit Corporation, Triangle PWC, or equal.

B. Steel conduit shall not be buried in earth without concrete encasement and additional corrosion protection. A half-lapped rapping of 20 mil PVC based corrosion protection tape shall be used.

2.3 PVC COATED GALVANIZED RIGID STEEL (PVC-GRS)

A. PVC coated GRS conduit shall be installed where shown on the Plans or elsewhere specified and shall conform to NEMA RN-1 and ANSI C80.1 standards.

B. The zinc surface of the conduit shall remain intact and undisturbed on both the inside and the outside of the conduit throughout the preparation and application processing. A Polyvinyl Chloride (PVC) coating shall be bonded to the galvanized outer surface of the conduit. The bond between the PVC coating and the conduit surface shall be greater than the tensile strength of the plastic. The thickness of the PVC coating shall be a minimum of 0.040-inch (40 mil).

C. A loose coupling shall be furnished with each length of conduit. A PVC coating shall be bonded to the outer surface of the coupling and a PVC sleeve equal to the outside diameter of the uncoated conduit shall extend beyond both ends of the coupling approximately one pipe diameter or 1-1/2 inches, whichever is smaller. The wall thickness of the coating on the coupling and the sleeve shall be a minimum of 0.055-inch (55 mil).

D. A PVC coating shall be bonded to the inner and outer surface of all conduit bodies and fittings and a PVC sleeve shall extend from all hubs. The wall thickness of the coating on conduit bodies and fittings and the sleeve walls shall be identical to those on couplings in length and thickness. The covers on all conduit bodies shall be coated on both sides and shall be designed to be completely interchangeable. The inside of conduit bodies shall remain undisturbed in the processing.

E. Type 304 stainless steel screws shall be furnished and used to attach the cover to the conduit body. All coated material shall be installed and patched according to the manufacturer's recommended installation and patching instructions.

F. Conduit straps shall be PVC coated or stainless steel.

G. PVC coated conduit and fittings shall be as manufactured by Kor Kap Corporation, Occidental Coating Company, Rob-Roy, or equal.

H. PVC coated flexible conduits shall be liquid and vaportight and manufactured in accordance with UL 360 standards.

2.4 RIGID NONMETALLIC - PVC

A. Where specifically indicated on the Plans, or elsewhere specified, conduit may be high density Schedule 40, 90 degrees C, heavy-duty PVC. The conduit shall be manufactured from virgin polyvinyl chloride compound which meets ASTM D1784, NEMA TC-2, ANSI C33.91, and UL 651 standards. Smoke emissions shall be limited to less than 6 grams per 100 grams of material tested.

B. Where conduit concrete encasement is indicated on the Plans, conduit supports shall be installed at five-foot intervals. PVC conduit shall be manufactured by Carlon, Triangle Conduit & Cable, or equal.

2.5 LIQUIDTIGHT FLEXIBLE METAL CONDUIT

A. Liquidtight flexible metal conduit shall be liquid and vaportight, oil and ultraviolet ray resistant and manufactured in accordance with UL 360 standards. Liquidtight flexible metal conduit shall be formed of a continuous, spiral wound, galvanized steel core with an extruded PVC jacket. The PVC jacket shall be rated for high ambient heat applications, 90 degrees Celsius.

B. For corrosive locations, liquidtight flexible metal conduit shall be formed of a continuous, spiral wound, aluminum core with an extruded PVC jacket. The PVC jacket shall be impervious to corrosive liquids and vapors.

C. An external bonding conductor shall be required for flexible conduit connections containing circuits rated at 60 amps or greater and for sizes 1 1/2 " or larger. Flexible conduit and connectors for 1 1/4" and smaller shall be listed for grounding.

D. Connectors for liquidtight flexible conduit shall be galvanized, furnished with a sealing ring and locknut, and suitable for wet locations.

2.6 WATER SEAL FITTINGS

A. Provide the malleable iron water seal fittings connected to rigid steel conduits as indicated, specified and required.

B. Sealing Bushings shall be provided on the ends of exterior underground conduits that terminate at indoor equipment. The bushing shall consist of a thick neoprene sealing ring secured between two metal plates by socket head screws. When the conduit sealing bushing is in place and the screws are tightened, the neoprene shall become compressed between the metal plates and be forced against the conduit inside wall and also against the conductor insulation to form a watertight seal inside the conduit.

C. Wall and Floor Seals shall be provided to completely seal the areas around the conduits that pass through concrete walls and floors. Seals shall have a neoprene grommet between two pressure rings, which provides a watertight seal on the outer surface of the entering conduits.

2.7 CONDUIT FITTINGS

A. Provide all the hot-dip galvanized steel and iron conduit fittings required to complete the wiring installations.

B. Liquid-tight Conduit Fittings shall be Types LT, ST, CT as manufactured by Crouse-Hinds, Appleton, Pyle-National or approved equal.

C. Union shall be provided, as required, for conduit connections to threaded outlet bodies, boxes, and equipment, for connecting two steel conduits together. Unions shall be type UNY or UNF. Running threads are not acceptable. Union shall be Appleton, Crouse-Hinds, Pyle-National or approved equal.

D. Bushing Reducers shall be provided in conduit fitting hubs for connections to smaller conduits. Reducers shall be Appleton, Thomas and Betts, Efcor or approved equal.

E. Conduit Enlargers shall be provided for connecting two conduits of different sizes together. The enlargers shall be Appleton, Thomas and Betts, Efcor or approved equal.

F. Locknuts shall be provided on the threads of conduits that enter through close fitting openings in enclosures. Locknuts shall have notches all around for tightening with a screwdriver. Locknuts shall be Appleton, O-Z, Thomas and Betts or approved equal.

G. Metallic Insulated Bushings with ground terminals shall be provided on the ends of threaded steel conduits and nipples that terminate through openings in sheet steel enclosures. The malleable iron grounding bushings shall have smooth and well-rounded surfaces to protect the conductor insulation. The conduit threads shall be deep, clean and easily attached to the conduits. The bushings shall be O-Z, Efcor, Thomas and Betts or approved equal.

H. Plugs shall be the recessed type and installed in all unused conduit fitting hubs and couplings. Plugs shall be Appleton, Crouse-Hinds or approved equal.

I. Interchangeable Hubs shall be provided for rigid steel conduit connections to sheet steel enclosures. The interchangeable hub shall have an insulated throat, sealing ring and vibration-proof nut. Machined serrations on hub and nut shall bite into the metal enclosure assuring an equipment ground. The hubs shall be Myers "Scru-Tite," "Efcor" "Space-Saver", or approved equal.

PART 3 - EXECUTION

3.1 INSTALLATION

A. Conduit runs are schematic only, and shall be modified as required to suit field conditions, subject to review and acceptance by the ENGINEER.

B. Conduit shall run continuously between outlets and shall be provided with junction boxes where connections are made. Couplings, connectors, and fittings shall be acceptable types designed and manufactured for the purpose, and shall provide a firm mechanical assembly, and electrical conductivity throughout.

C. Conduit runs shall be straight and true. Elbows, offsets, and bends shall be uniform and symmetrical. Changes in direction shall be made with long radius bends, or with fittings of the condulet type.

D. Conduit runs in buildings and structures shall be exposed except as specifically noted, or accepted by the ENGINEER.

E. Conduit runs shall not interfere with the proper and safe operation of equipment, and shall not block or interfere with ingress or egress, including equipment removal hatches.

F. Exposed conduits shall be securely fastened with clamps, or straps, intended for conduit use. All exposed conduit shall be run on the walls and ceiling only and shall be parallel to the planes of the walls or ceiling. No diagonal runs will be permitted. Flexible conduit shall be used only for short lengths required to facilitate connections between rigid conduit to motors from junction boxes, or control equipment. The maximum length of flexible conduit shall be 3 feet.

G. Conduit runs on water-bearing walls shall be supported one inch away from the wall on an accepted channel. When channel galvanizing, or other coating, is cut or otherwise damaged, it shall be field coated to original condition. No conduit shall be run in water-bearing walls, unless specifically designated otherwise.

H. Conduit shall be thoroughly reamed to remove burrs. IMC or GRS shall be reamed during the threading process, and Rigid Nonmetallic PVC shall be reamed before applying fittings. A zinc rich cold galvanizing shall be used to restore corrosion protection on field cut threads. Bushings and lock nuts or hubs shall be used at conduit terminations. The

total number of bends in any run between pull points shall not exceed 360 degrees. Junction boxes and pull boxes shall be installed at points acceptable to the ENGINEER. Conduit ends shall be plugged to prevent the entrance of moisture or debris during construction. All spare conduits shall be adequately capped and shall contain a suitable pull string.

I. Joints shall be set up tight. Hangers and fastenings shall be secure, and of a type appropriate in design, and dimensions, for the particular application.

J. Conduit runs shall be cleaned and internally sized (obstruction tested) so that no foreign objects, or obstructions remain in the conduit prior to pulling in conductors.

K. After installation of complete conduit runs 2 inches and larger, conduits shall be snaked with a conduit cleaner equipped with a cylindrical mandrel of a diameter not less than 85 percent of the nominal diameter of the conduit. Conduits through which the mandrel will not pass shall not be used.

L. Expansion fittings shall be installed across all expansion joints and at other locations where necessary to compensate for thermal expansion and contraction.

M. Provide trenching, backfill, and compaction for conduits installed underground.

END OF SECTION

SECTION 16118 – CONCRETE PULL BOXES

PART 1 – GENERAL

1.1 SCOPE OF WORK

A. The CONTRACTOR shall furnish and install pre-cast concrete pull boxes in the locations indicated on the Plans and as required.

1.2 SUBMITTALS

A. Products shall be submitted for review prior to installation in accordance with the Contract Documents, Section 01300 and Section 16000.

PART 2 – PRODUCTS

A. The pull boxes shall be designed for traffic conditions, and the pull box and cover shall be designed for heavy traffic bridge loading unless otherwise noted. The pull boxes shall have dimensions indicated on the plans. The pull boxes shall be constructed of concrete.

B. The pull boxes shall be Quikset, Utility Vault Co., or equal, with covers. The covers shall be engraved "ELECTRICAL".

PART 3 – EXECUTION

3.1 INSTALLATION

A. The pull boxes shall be installed on 12 inches of compacted gravel and shall be installed in such a manner that the cover of the pull box will be flush with finished grade.

END OF SECTION

SECTION 16123 – CONDUCTORS AND CABLES

PART 1 – GENERAL

1.1 SCOPE OF WORK

A. This section covers the furnishing and installation of 600 Volt Class cables and conductors, terminations and splicing, and pulling lubricants.

1.2 SUBMITTALS

A. Products shall be submitted in accordance with Division 01.

1.3 REFERENCES

A. Insulated Cable Engineers Association/National Electrical Manufacturers Association (ICEA/NEMA):

B. S-68-516/WC 8, ethylene-propylene rubber-insulated wire and cable for the transmission and distribution of electrical energy.

C. S-61-402/WC 5, thermoplastic-insulated wire and cable for the transmission and distribution of electrical energy.

D. S-66-524/WC 7, cross-linked thermosetting-polyethylene-insulated wire and cable for transmission and distribution of electrical energy.

E. Underwriters Laboratory, Inc.:
   1. 44, rubber insulated wires and cables.
   2. 83, thermoplastic-insulated wires and cables.
   3. 486A, wire connectors and soldering lugs for use with copper conductors.
   4. 486B, wire connectors for use with aluminum conductors.
   5. 510, insulating tape.

F. National Electric Code.

G. Insulated Cable Engineers Association.

PART 2 – PRODUCTS

2.1 ACCEPTED MANUFACTURERS

A. Conductors and Multi Conductor Cables (MCC), subject to compliance with Contract Documents, the following manufacturers are acceptable: American Insulated Wire Corporation, Cablec Corporation, Okonite Company, Southwire Company, or equal.

2.2 CONDUCTORS

A. Cables and conductors shall be rated for 600 volts. Wire sizes shall be American Wire Gauge (AWG) sizes with Class B stranded construction. Number 2 AWG and smaller shall be factory color coded with a separate color for each phase and neutral, which shall be used consistently throughout the system. Larger cables shall be coded by the use of colored tape. Conductors sized No. 1 and larger shall be Type 2, rated for 90 degrees C. All circuit conductors, #6 or smaller shall be "THWN" stranded copper. All other conductors shall be "XHHW" stranded copper.

B. Individual or multiple conductor cables for power, control, and alarm circuits of 480 volts or less shall be insulated for not less than 600 volts and shall have insulation type as indicated on the Plans. "THHW' shall conform to ICEA S-61-402/NEMA WC 5 and UL 83 and "XHHW' shall conform to ICEA 5-66-524/NEMA WC 7 and UL 44. Where wire size is not indicated, they shall be of the size required by the NEC, except that no wire external to panels and motor control centers shall be less than No. 12 AWG, unless specifically noted on the Plans. Panel control wiring shall not be less than No. 14 AWG.

C. All wiring shall be as indicated on the Plans. Wires shall be new and shall be soft drawn copper with not less than 97 percent conductivity. The wire and cable shall have size, grade of insulation, voltage, and manufacturer's name permanently marked on the outer covering at not more than 2-foot intervals. All wires shall conform to the latest Standards of the ASTM, and ICEA, and shall be

tested for their full length by these Standards. Insulation thickness shall be not less than that specified by the National Electrical Code.

2.3 TERMINATIONS AND SPLICES

A. Other parts of cable systems such as splices and terminations shall be rated at not less than 600 volts. Splicing shall join conductors mechanically and electrically to provide a complete circuit prior to installation of insulation.

B. Splices in wires No. 10 AWG and smaller shall be made with an insulated, solderless, pressure type connector, Type I, Class 1, Grade B, Style G, or Type II, Class 1 of FS W-S-610 and conforming to the applicable requirements of UL 486A.

C. Splices in wires No. 8 AWG and larger shall be made with noninsulated, solderless, pressure type connector, Type II, Class 2 of FS W-S-610, conforming to the applicable requirements of UL 486A and UL 486B. They shall then be covered with an insulation and jacket material equivalent to the conductor insulation and jacket.

D. Insulated conductor splices below grade or in wet locations shall be sealed type conforming to ANSI C119.1 or shall be waterproofed by a sealant-filled, thick wall, heat shrinkable, thermosetting tubing or by pouring a thermosetting resin into a mold that surrounds the joined conductors.

E. Bare conductor splices in wet locations or below grade shall be of the exothermic type.

2.4 WIRE CONNECTORS

A. Connectors shall be provided for splices and terminal connections of all copper conductors and cables. The connector shall fit the conductor to which it shall be connected, and the assembly shall have joint contact surfaces not less than 50 percent.

B. 120 – 240V shall use red or black as ungrounded connectors; white or gray as grounded conductors; and green as grounding conductors. 480V shall use brown as Phase A, orange as Phase B, and yellow as Phase C; white or gray grounded conductor/neutral; and green as grounding conductor. Conductors shall be terminated in appropriately sized terminal boxes.

C. Compression Connectors for No. 8 AWG and larger shall be copper lugs for terminal connections, and two-way copper sleeves and taps for splice connections. A crimping tool shall be provided to make tight and neat compression connections. The connectors and crimping tool shall be Anderson-Square D, Thomas and Betts, Buchanan or approved equal.

D. Tapered Spring Connectors shall have live springs attached to inner steel housings and enclosed with plastic insulators. Connectors shall be provided for No. 10 AWG conductors and smaller, and shall be Buchanan Type B2, Scotchlok Type B, Thomas and Betts Type PT or approved equal.

E. Ground Clamps shall be provided for cable connections to ground rods and metal pipes as shown on the Drawings. Clamps shall be copper alloy, heavy duty, corrosion resistant and consist of U-bolts and saddles with bolted cable connections. The ground clamps shall be O-Z, Thomas and Betts Burndy or approved equal.

F. Electrical Tape shall be plastic, 0.007 inches thick, and resistant to abrasion, alkalies, acids, corrosion, moisture, low and high temperatures. The tape shall be Scotch No. 33 Plus, Plymouth Premium Black No. 4453 or approved equal.

G. Wire Markers shall be provided to identify each conductor at equipment terminals, and in intermediate junction boxes, pull boxes, handholes and manholes. At motor control centers and control panels, identify each motor or other electrical device circuit conductor with the motor or device number shown on the drawings and with the terminal number of the motor control center or control panel to which the conductor is connected. At motor and device terminals, at control stations, and in junction boxes, pull boxes, handholes and manholes, identify each motor or device circuit conductor with the terminal number of the motor control center or control panel to which the conductor is connected. In addition to identifying each conductor with the terminal number, in junction boxes, pull boxes, handholes and manholes, identify each group of conductors forming a motor or device circuit with the motor or device number shown on the drawings. At panelboards, junction boxes, pull boxes, handholes and manholes, identify each panelboard circuit conductor with the panelboard number and circuit number. The individual conductor wire markers shall be adhesive and manufactured by Thomas and Betts, Brady, Scotch 3M or approved equal. The wire marker to identify groups of conductors shall be nylon cable tie markers as manufactured by Brady,

Seaton, Thomas and Betts, Panduit or approved equal. The marker pads on the cable tie markers shall be large enough to show the motor or device numbers. The motor or device numbers on the cable tie markers shall be 3/16-inch-high minimum and shall be applied to the marker pads using marking pens for the purpose which shall be provided by the manufacturer of the cable tie markers. When a device is not numbered on the drawings, use a short descriptive title or assign numbers and provide the Owner with a list of the devices and assigned numbers. Electrical devices include items such as solenoid valves, vibrators, horns, heaters, analyzers, computers, instruments, etc.

2.5 PULLING LUBRICANT

A. All cables shall be properly coated with pulling compound (Aqua Gel, Polywater, or equal) before being pulled into conduits so as to prevent mechanical damage to the cables during installation. "Yellow 77" is not acceptable.

B. Other lubricants to be substituted must be accompanied by a statement from the cable manufacturer as to its acceptable use with the cable being installed.

2.6 IDENTIFICATION

A. All conductors shall be numbered with "tube sleeve" type tags with heat impressed letters and numbers.

B. Color code all wiring as follows:
   1. Lighting and power wiring: 120 – 240V shall use red or black as ungrounded connectors; white or gray as grounded conductors; and green as grounding conductors. 480V shall use brown as Phase A, orange as Phase B, and yellow as Phase C; white or gray grounded conductor/neutral; and green as grounding conductor.
   2. Color code ends of feeder phase conductors only.

PART 3 – EXECUTION

3.1 INSTALLATION

A. The pulling tension and side-wall pressures, as recommended by the cable manufacturer, shall not be exceeded.

B. As far as practical, all circuits shall be continuous from origin to termination without splices in intermediate pull boxes. Sufficient slack shall be left at the termination to make proper connections. In no case shall a splice be pulled into the conduit. Conductor splicing shall not be permitted without the ENGINEER's approval.

C. Install all cables in conduit.

D. Each feeder and branch circuit shall be installed in its own individual conduit unless combining feeder and branch circuits is permitted as defined in the following:
   1. As specifically indicated on the Plans.
   2. For lighting, multiple branch circuits may be installed in a conduit as allowed by the NEC and with the wire ampacity derated in accordance with the requirements of the NEC. Conduit fill shall not exceed the limits established by the NEC.
   3. When field conditions dictate and written permission is obtained from the ENGINEER.

E. Feeder and branch circuits shall be isolated from each other and from all instrumentation and control circuits.

F. Control circuits shall be isolated from all other feeder, branch and instrumentation circuits, except as noted above.
   1. 12 VDC, 24 VDC and 48 VDC control circuits may be combined in common conduit.
   2. 125 VDC control circuits shall be isolated from all other DC and AC control circuits.
   3. 120 VAC control circuits shall be isolated from all DC control circuits.

G. Make splices only at pull or junction boxes.
   Crimp or indented-type connectors are not allowed, except for control circuits landed on terminal strips.

END OF SECTION

SECTION 16124 – INSTRUMENTATION CLASS CABLE

PART 1 – GENERAL

1.1 SCOPE OF WORK

A. This section covers cable use for process signal and controls.

1.2 SUBMITTALS

A. Products shall be submitted in accordance with Section 01300, Section 16000, and elsewhere in the Contract Documents, prior to installation.

PART 2 - PRODUCTS

2.1 ACCEPTABLE MANUFACTURERS

A. Subject to compliance with Contract Documents, the instrumentation cable shall be as manufactured by Belden, Okonite, or equal.

2.2 INSTRUMENTATION CABLE

A. Instrument cable shall be Type TC, and have the number of individually shielded twisted pairs indicated on the Plans and shall be insulated for not less than 600 volts. Unless otherwise indicated, conductor size shall be No. 18 AWG minimum. Shielded, grounded instrumentation cable shall be used for all analog and low voltage digital signals.

B. The jacket shall be flame retardant with 90 degrees C temperature rating. The cable shield shall be a minimum of 2.3 mil aluminum or copper tape overlapped to provide 100 percent coverage and a tinned copper drain wire.

C. The conductors shall be bare soft annealed copper, Class B, 7 strand minimum concentric lay with 15 mils nominal thickness, nylon jacket, 4 mil nominal thickness, 90 degrees C temperature rating. One conductor within each pair shall be numerically identified.

D. Pairs shall be assembled with a nominal 2-inch lay and shall then be group shielded with a minimum of 1.3 mil aluminum or copper tape overlapped to provide 100 percent coverage. All group shields shall be completely isolated from each other.

PART 3 - EXECUTION

3.1 INSTALLATION

A. Feeder and branch circuits shall be isolated from each other, and from instrumentation and control circuits. Instrumentation cables shall be installed in separate raceways from other cables and wiring. This includes portions running through manholes. Instrumentation cable shall be continuous between instruments or between field devices and instrument enclosures. There shall be no intermediate splices or terminal boards, unless otherwise shown on the Plans.

B. Maintain electrical continuity of the shield when splicing twisted shielded pair conductors. Drain wires shall be terminated inside enclosures at grounded terminal blocks. Only one end of each instrument loop cable drain wire shall be grounded. Ground drain wire of shielded conductors at one end only.

C. Terminate instrumentation and control wiring, including spare wires, at control panels and motor control centers on terminal boards mounted inside the equipment.
   1. CONTRACTOR shall supply terminal boards as required.
   2. Do not field wire directly to devices.

END OF SECTION

SECTION 16130 – OUTLET, PULL, AND JUNCTION BOXES

PART 1 - GENERAL

1.1 SUMMARY

A. Section Includes: 1. Outlet, pull and junction boxes.

1.2 QUALITY ASSURANCE

A. Referenced Standards: Refer to Section 16000.

1.3 SUBMITTALS

A. Shop Drawings: Refer to the Contract Documents, Section 01300 and Section 16000.

1.4 DELIVERY, STORAGE, AND HANDLING

A. See Section 16000.

PART 2 - PRODUCTS

2.1 ACCEPTABLE MANUFACTURERS

A. Subject to compliance with the Contract Documents, the following manufacturers are acceptable:
   1. Galvanized steel boxes:
      a. Appleton Electric Co.
      b. Steel City.
      c. Raco.
   2. Sheet metal boxes for non-classified areas:
      a. Hoffman Engineering Co.
   3. Corrosion-resistant boxes:
      a. Hoffman Engineering Co.
      b. Crouse-Hinds.
   4. Hazardous location boxes (Class I, II & III):
      a. Appleton Electric Co.
      b. Crouse-Hinds.
      c. Killark.
      d. O-Z/Gedney.
   5. Raintight and watertight boxes:
      a. Appleton Electric Co.
      b. Crouse-Hinds.
   6. Terminal boxes:
      a. Hoffman Engineering Co.
   7. Boxes in sidewalk:
      a. Appleton Electric Co.
      b. Crouse-Hinds.
      c. O-Z/Gedney.
      d. Boxes in earth:
      e. Carlon Electric Products.
   8. Exposed switch and receptacle boxes:
      a. Appleton Electric Co.
      b. Crouse-Hinds.

B. Submit requests for substitution in accordance with Specification Section 01630.

2.2 MATERIALS

A. Pull and Junction Boxes for Offices and other Dry Architecturally Finished Areas:
   1. Material: 14 GA, galvanized steel.
   2. Concentric knockouts on all four sides.
   3. Flat cover fastened with screws.
   4. NEMA 1 classification.
   5. UL listed.

B. Pull and Junction Boxes for General Use Unclassified Areas Suitable for NEMA 12 Enclosures:
   1. Material: 14 GA galvanized steel with seams continuously welded, ground smooth and no knockouts.
   2. Zinc rich coating on all seams.
   3. Stainless steel captivated cover screws threaded into sealed wells.
   4. Flat door with oil resistant gasket.
   5. NEMA 12 classification.
   6. UL listed.

C. Pull and Junction Boxes for Wet Areas:
   1. Material: 14 GA steel with polyester powder coating inside and out over phosphatized surfaces.
   2. Seams continuously welded, ground smooth, no knockouts.
   3. Stainless steel clamps on four sides.
   4. Flat cover with oil resistant gasket.
   5. NEMA 4 classification.
   6. UL listed.

D. Pull and Junction Boxes for Corrosive Areas:
   1. Material: 14 GA steel with powdered epoxy resin coating inside and out or fiberglass-reinforced polyester material.
   2. Steel boxes:
      a. Seams continuously welded, ground smooth, no knockouts.
      b. Rolled lip around all sides.
      c. Hinged door.
      d. Captivated stainless steel door screws.
      e. Flat door with oil-resistant gasket.
   3. Fiberglass-reinforced polyester boxes:
      a. Hinged door with latch and lockout.
      b. Neoprene door gasket.
      c. Grounding bushing(s).
   4. NEMA 4X classification.
   5. UL listed.

E. Pull and Junction Boxes for Hazardous Areas:
   1. Material: Cast gray iron alloy or copper-free cast aluminum.
   2. Drilled and tapped openings or tapered threaded hub equipped.
   3. Flat bolted-down or threaded cover with neoprene gasket.
   4. Stainless steel hex head screws.
   5. Explosion proof, UL listed for Class 1 Groups C and D.

F. Pull and Junction Boxes for Sidewalks:
   1. Cast-iron box and cover, hot-dip galvanized.
   2. Flange for flush mounting.
   3. Checkered cover with neoprene gasket, pry bar slots and stainless-steel screws.
   4. UL listed.

5. Drilled and tapped holes.
6. Watertight NEMA 4 classification.

G. Large Pull and Junction Boxes (100 CU IN and larger):
1. Located in offices and other dry architecturally finished areas where EMT is utilized:
   a. NEMA 1 gasketed without knockouts.
2. Located in general use areas:
   a. NEMA 12 construction:
      1) Welded steel.
      2) Furnished with gray enamel inside and out over phosphatized surfaces.
3. Located in wet and corrosive areas:
   a. NEMA 4X with stainless steel screws.
   b. Type 304 L welded stainless steel:
4. Constructed of 14 GA steel with seams continuously welded, ground smooth, no knockouts.
5. Rolled lip around all sides.
6. Rigid handles for covers larger than 9 SF or heavier than 25 LBS.
7. Split covers when heavier than 25 LBS.

H. Terminal Boxes:
1. Galvanized 16 GA steel box provided with plain blank screw cover, subpanel, and terminal points.
2. Refer to Drawing for dimensions and number of terminals.
3. Terminal blocks shall be screw-post barrier-type, white center marker strip.
4. Rated 20 ampere, minimum 600 V.

I. Fiberglass Cable-Pulling Enclosure:
1. Use: Access points to facilitate pulling of electrical cables in buried conduit runs.
2. Size and quantity: As shown on Drawings.
3. Type: Rectangular fiberglass composite, suitable for direct burial pedestrian traffic on top, -50 DegF, chemical, sunlight, and weather resistant.
4. Provide matching top with "ELECTRIC" logo.

J. Outlet Boxes:
1. Use: Installation of wiring devices.
2. Boxes for exposed wiring:
   a. Cadmium plated, cast, ferrous metal, with threaded hubs.
3. Boxes for concealed wiring:
   a. Code gage, hot-dip galvanized steel.
   b. Include bar hangers for metal stud partitions.
   c. Provide barriers between switches in boxes with 277 V switches on opposite phases.
   d. Use extension and plaster rings where required.
   e. Provide grounding screw.

PART 3 - EXECUTION

3.1 INSTALLATION

A. Use locknut and bushing for boxes in non-classified areas.

B. Use cast metal boxes with threaded conduit hubs in hazardous areas.

C. Use Type FS and FD boxes in wet areas and where exposed rigid steel conduit is required.

D. Use epoxy resin coated, stainless steel, cast aluminum or fiberglass boxes for corrosive

areas.

E. Fill unused punched-out, tapped, or threaded hub openings with insert plugs.

F. Use outlet boxes sized to accommodate quantity of conductors enclosed.

G. Use boxes sized to accommodate conduit tying into box.

H. Install pull boxes or junction boxes in conduit runs where indicated or required to facilitate pulling of wires or making connections.
   1. Make covers of boxes accessible.

I. Install pull boxes or junction boxes rated for the area classification.

J. Install rigid conduit squarely into boxes which do not have hubs or are drilled and tapped.
   1. Install with locknut on the outside and bushing on inside.

K. Install conduit into boxes with hubs, or that are tapped, using thread lubricant.

L. Do not use back-to-back boxes on this Project.

M. Seal all points of conduit entry into fiberglass cable-pulling enclosures for a waterproof installation.

N. Support outlet boxes for incandescent fixtures (where applicable) and other ceiling-mounted devices in lay-in acoustical tile ceilings by bar hangers anchored to ceiling construction members which do not interfere with tile removal.

END OF SECTION

SECTION 16141 – WIRING DEVICES

PART 1 - GENERAL

1.1 SUMMARY

A. Section Includes:
   1. Light switches, receptacles, device plates, dimmers, plug-in strips and tele-power poles.

1.2 QUALITY ASSURANCE

A. Referenced Standards: Refer to Section 16000.

1.3 SUBMITTALS

A. Shop Drawings: Refer to the Contract Documents, Section 01300 and Section 16000.

PART 2 - PRODUCTS

2.1 ACCEPTABLE MANUFACTURERS

A. Subject to compliance with the Contract Documents, the following manufacturers are acceptable:
   1. Light switches (except explosion proof):
      a. Hubbell.
      b. Slater.
      c. P&S.
      d. Arrow Hart.
      e. General Electric.
      f. Leviton.
   2. Explosion proof light switches:
      a. Crouse-Hinds.
      b. Appleton Electric Co.
      c. Killark.
   3. Door switches:
      a. General Electric.
      b. Slater.
      c. P&S.
      d. Arrow Hart.
      e. Micro-switch.
   4. Receptacles (except explosion proof):
      a. Hubbell.
      b. Slater.
      c. P&S.
      d. Arrow Hart.
      e. General Electric.
      f. Leviton.
   5. Explosion proof receptacles:
      a. Crouse-Hinds.
      b. Appleton Electric Co.
      c. Killark.
   6. Welding receptacles:
      a. Crouse-Hinds.
      b. Appleton Electric Co.
   7. Tele-power poles:

a. Wiremold.
b. Walker.

8. Dimmers:
   a. Lutron.
   b. General Electric
   c. P&S.
9. Plug-in strip:
   a. Wiremold.
   b. Walker.

2.2 MATERIALS

A. Light Switches for Unclassified Areas:
1. Toggle type, quiet action, specification grade with grounding terminal.
2. Back and side wired.
3. Solid silver cadmium oxide contacts.
4. One-piece switch arm rated 20 A, 120/277 V AC.
5. UL listed.
6. Color: Ivory (or owner specified)
7. Wall plate: Type 304 stainless steel.
8. Type: As indicated on Drawings.

B. Receptacles for Unclassified Areas:
1. Straight blade, grounding type, specification grade.
2. Back and side wired with wrap-around bridge.
3. Rated 20 A, 125 V AC.
4. UL listed.
5. Color:
   a. For use on normal power: Ivory (or owner specified).
   b. For use on UPS systems: Red.
   c. For use on isolated ground systems: Orange.
6. Wall plate: Type 304 stainless steel.
7. Type: As indicated on Drawings.

C. Light Switches for Wet Areas:
1. Presswitch type, quiet action, specification grade, with grounding terminal.
2. Back and side wired.
3. Solid silver cadmium oxide contacts.
4. One-piece switch arm rated 20 A, 120/277 V AC.
5. UL listed.
6. Color. Ivory (or owner specified).
7. Wall plate: Gray weatherproof presswitch type.
8. Type: As indicated on Drawings.

D. Receptacles for Wet Areas:
1. Straight blade, grounding type, specification grade.
2. Back and side wired with wrap around bridge.
3. Rated 20 A, 125 V AC.
4. UL listed.
5. Color: Ivory (or owner specified).
6. Wall plate: Weatherproof, cast aluminum, UL listed, WDL open and closed.
7. Type: As indicated on Drawings.

E. Ground Fault Circuit Interrupter Receptacles:

1. Straight blade, grounding type, specification grade.
2. Rated 20 A, 125 VAC.
3. UL listed.
4. Test and reset buttons.
5. Wall plate: Indoor or weatherproof as required.
6. Feed-through type.

F. Light Switches for Corrosive Areas:
1. Corrosion-resistant NEMA 4X enclosure with switch consisting of:
   a. Fiberglass reinforced polyester enclosure.
   b. Fiberglass reinforced polyester gasketed wall plate with built-in toggle lever switch with stainless steel shaft.
   c. Grounding bushing.
   d. Rated 20 A, 125 V AC.
   e. UL listed.
   f. Type: As indicated on Drawings.
   g. Color. Yellow.
2. Optional: Corrosion-resistant enclosure and switch consisting of:
   a. Cast copper-free aluminum "FS" or "FD" ridge type hub box.
   b. Toggle type, quiet action, specification grade with grounding terminal.
   c. Rated 20 A, 125 V AC with solid silver cadmium oxide contacts.
   d. UL listed.
   e. Neoprene gasket.
   f. Cast aluminum cover with stainless steel screws and lever to activate switch.
   g. Type: As indicated on Drawings.
   h. Color: Yellow.

G. Receptacles for Corrosive Areas:
1. Corrosion-resistant straight blade, grounding type, specification grade.
2. Back and side wired with wrap-around bridge.
3. Rated 20 A, 125 V AC.
4. UL listed.
5. Color: Yellow.
6. Box: "FS" or "FD" ridge type cast hub box of copper-free aluminum.
7. Gasket: Neoprene.
8. Wall plate: Weatherproof, cast aluminum, UL listed, WDL open or closed.
9. Type: As indicated on Drawings.

H. Explosion proof Light Switches for Use in Hazardous Areas:
1. Explosion proof, UL listed for Class I, Division 1 and 2, Groups B, C, and D; and Class II, Division 1 and 2 areas, Groups E, F, and G.
2. EDS factory sealed.
3. Malleable iron body and cover.
4. Aluminum sealing chamber.
5. Front operated handle with stainless steel shaft.
6. Rated 20 A, 125 V AC.
7. With grounding screw.
8. Type: As indicated on Drawings.

I. Explosion proof Receptacles for Use in Hazardous Areas:
1. Explosion-proof, UL listed for Class I, Division 1 and 2, Groups B, C, and D; and Class II, Division 1 and 2, Groups F and G.
2. Factory-sealed malleable iron receptacle with spring-loaded cover.

3. Malleable iron mounting box.
4. Rated 20 A, 125 V AC.
5. "Dead-front" construction requiring plug to be inserted and rotated to activate receptacle.
6. Type: As indicated on Drawings.

J. Welding Receptacles: 1. 60 A, 480 V, 3 pole, 4 wire, grounding type.

K. Plug-In Strip: Surface steel raceway plug-in strip with single 15 A, 125 V, 3 wire grounding-type receptacles spaced 18 IN on center.
1. Prewired with two #12 TW and one #12 TW green insulated ground.
2. Minimum 1-1/4 IN wide x 3/4 IN deep.
3. Suitable fittings and snap-in cover.
4. Finish:
   a. Stainless steel.
5. Receptacle color:
   a. For use on normal power: Ivory (or owner specified).
   b. For use on UPS systems: Red.
   c. For use on isolated ground systems: Orange.

PART 3 - EXECUTION

3.1 INSTALLATION

A. Mount devices where indicated on the Drawings.

B. Surface mount receptacles and light switches in concrete construction.

C. In masonry and metal stud construction (when applicable), recess mount receptacles and light switches unless device precludes recessed mounting or unless otherwise noted on the Drawings.

D. Where more than one receptacle is installed in a room, they shall be symmetrically arranged.

E. Set switches and receptacles plumb and vertical to the floor.

F. Set recess-mounted switches and receptacles flush with face of walls.

G. Do not connect dimmers to loads in excess of 80 percent of the rating of the dimmer.

H. Provide blank plates for empty outlets.

END OF SECTION

SECTION 16143 – TERMINAL BLOCKS

PART 1 - GENERAL

1.1 SCOPE OF WORK

A. This section covers terminal blocks for control and other wiring.

1.2 SUBMITTALS

A. Products shall be submitted in accordance with Section 01300, Section 16000, and elsewhere in the Contract Documents prior to installation.

1.3 MANUFACTURERS

A. Terminal blocks shall be Entrelec, Phoenix Contact, Weidmuller, or equal.

B. Surge protection blocks shall be TELEMATIC, series SD, or equal.

C. Power distribution blocks shall be Ilsco Corporation, or equal.

PART 2 - PRODUCTS

2.1 TERMINAL BLOCKS

A. Terminal blocks shall mount on standard DIN rail, and be of the size required for conductors therein. A minimum of 25 percent spares shall be provided in each terminal box. No more than 2 conductors shall be allowed per termination. Jumper bar assemblies shall be installed for interconnecting terminal blocks, distributing power and signal commons. Terminal blocks shall be U.L. rated for 600 Volts, and 30 Amps, minimum.

B. Grounding terminal blocks shall be provided for instrumentation cable shields. The terminal blocks shall have distinctive 2-color bodies, and shall be mounted to the DIN rail with metal screw down type clamps, providing a positive ground connection. One grounding terminal block shall be installed for every 2 instrument cables terminated. Grounding terminal blocks shall be U.L. rated for 600 Volts, and 20 Amps, minimum.

C. Terminal blocks shall be available in a variety of colors, including red, green, blue, gray, black, yellow, and orange.

D. DIN mount fuse holders shall have blown fuse indicators for DC and AC circuits. Fuse holders shall be of the compression clamp type. Fuse holders shall be U.L. listed, and rated for 600 Volts. Fuse sizes shall not exceed the U.L. current rating for the fuse holders.

E. DIN rail shall be prepunched, zinc bichromate plated steel. Symmetrical DIN rail shall be 35mmX7.5mm, minimum.

F. Terminal blocks for 4 to 20 milliamp signals shall have knife disconnect switches, and accessible test points for testing and measurement of current loop signals, without the need for removing wire terminations.

2.2 SURGE PROTECTION BLOCKS (SPB)

A. Analog inputs and outputs shall be terminated at surge protection blocks (SPB). The SPBs shall be designed for a working voltage of 32 volts, and shall be fused.

B. SPBs shall provide full hybrid line to line protection, and shall have a GDT rating of 10,000 A (8/20µs pulse waveform).

C. SPBs shall be UL94 V-2 listed.

2.3 POWER DISTRIBUTION BLOCKS (PDB)

A. PDBs shall be Electro tin plated and manufactured from high strength 6061-T6 aluminum alloy.

B. PDBs shall be UL Recognized, rated 900 C, and CSA Certified.

C. PDBs shall provide flexibility in using the connector as an in-line splice or to reduce conductor size for taps.

D. PDBs shall be rated for 600 Volts and dual rated for Copper and Aluminum Conductors.

E. PDBs shall have the sizes and ratings as shown on the Plans. PART 3 EXECUTION.

PART 3 - EXECUTION

3.1 INSTALLATION

A. Each terminal block and fuse holder shall be identified with the circuit number, or conductor number, corresponding to the identification appearing on the shop Drawings for the equipment, or system.

B. Terminal block and fuse holder markers shall be computer printed plastic-type, with permanent markings.

C. End clamps and end sections shall be installed on each terminal block and fuse holder assembly.

D. Terminal blocks for DC voltages shall be blue, and AC voltages shall be gray.

END OF SECTION

SECTION 16150 - INDUCTION MOTORS

PART 1 - GENERAL

1.1 THE REQUIREMENT

A. This Section outlines the electrical requirements for squirrel-cage induction motors.

1.2 SUBMITTALS

A. Submit for the Engineer's approval shop drawings, factory test reports, manufacturers' certified reports and technical data for motors supplied with driven equipment to the extent required in this Section, and the Specification Sections for mechanical equipment.

B. Shop Drawings: In addition to information to be included in the shop drawing and, shop drawings shall include the following:
   1. Motor locked rotor and full load currents.
   2. Power factors and efficiencies at full load, three quarters load and half load.
   3. Motor housing material, winding material NEMA Design letter, NEMA Code Letter, ambient temperatures and maximum elevations in which motor is designed to operate continuously, motor type (inverter-duty, non-inverter-duty, etc.), service factor, NEMA insulation Class, temperature rise, type of enclosure, voltage, bearing life and dynamic balance; all of which shall comply to the requirements of the specifications.
   4. Nameplate data.
   5. Dimensions and weights of motors.
   6. Motor construction details.
   7. Speed torque/current at 100 percent volts.
   8. Wiring diagrams, internal and typical external connections.

C. Current Data: Submit to the Engineer of field recorded current data. The data shall indicate the full load current for each motor and current rating for the overload relay in each motor starter and controller.

PART 2 - PRODUCTS

2.1 GENERAL

A. Motors shall be supplied by the manufacturer of the driven equipment as specified in this section, and specifically outlined in the driven equipment specifications. The Motors shall be completely fabricated, assembled, checked and tested at the factory in accordance with NEMA MG-1. The induction motors shall be Siemens-Allis, Louis Allis, Reliance, U.S. Electrical Motors, or approved equal.

B. Motor Ratings (non-submersible type):
   1. Torque and slip characteristics shall be as recommended by the manufacturer of the driven equipment and as specified. Motor manufacturer shall confirm motor capability to the specifications.
   2. Motors shall operate continuously and satisfactorily in ambient temperatures from minus 10 degrees C to plus 50 degrees C at a maximum elevation of 1,200 feet without exceeding nameplate horsepower rating.
   3. The motors shall have high power factor and the minimum power factor shall be 80 percent at full load.
   4. Motors shall be designed for high efficiency. Motors with the following minimum efficiencies, at full load, shall be provided:
      a. 80 percent minimum efficiency shall be provided for motors through 5 horsepower.
      b. 85 percent minimum efficiency shall be provided for motors 7-1/2 through 15 horsepower.

c. 90 percent minimum efficiency shall be provided for motors 20 through 40 horsepower.
d. 92 percent minimum efficiency shall be provided for motors 50 through 125 horsepower.
e. 94 percent minimum efficiency shall be provided for motors 150 horsepower and larger.

5. The motors shall be sized so that the BHP does not exceed 95 percent of the full load nameplate horsepower.
6. The motor must be able to accelerate the driven machine from zero to top speed at 90 percent of rated voltage without overheating.
7. The maximum locked rotor KVA/HP code letter for motors smaller than 15 HP shall not exceed the requirements for NEMA Design B motors. The maximum locked rotor KVA/HP code letter shall be Code G for motors 15 HP through 250 HP unless otherwise indicated. The maximum locked rotor KVA/HP code letter shall be Code F for motors 300 horsepower and larger unless otherwise indicated.
8. All motors shall be insulated and braced for full voltage across the line starting regardless of the starting method used.
9. Motors 1/2 HP and larger shall be NEMA MG1-1.16 Design B and shall have NEMA MG1-1.65 Class F insulation.
10. The temperature rise by resistance above the temperature of the cooling medium, for each of the various parts of the motor shall not exceed the values of the NEMA MG1-1.65 Class B insulation system as indicated in NEMA MG 1-12.42. These are total temperatures, based on maximum ambient of 40° C (104° F), plus additional heat (temperature rise) generated by motor operation. Greater than 40° C ambient shall require at a minimum, Class H insulation special application considerations or special motor designs.
11. All open and TEFC motors 250 HP and less and all vertical motors shall have a 1.15 service factor. All horizontal motors larger than 250 HP shall have a 1.0 service factor.
12. Motors 1/2 HP through 250 HP shall be 208 volts, 3 phase, 60 Hertz unless otherwise indicated.
13. Motors smaller than 1/2 HP shall be 120/208 volts, 1 phase, 60 Hertz unless otherwise indicated.
14. Motors driven by adjustable speed drives shall be inverter-duty type.

C. Motor Construction:

1. Enclosures for induction motors shall be approved for the installations and as indicated. The enclosure types shall be one of the following as outlined in the driven equipment specifications unless otherwise indicated.
   a. Totally-enclosed fan cooled
   b. Totally-enclosed non-ventilated
   c. Weather-protected, Type I
   d. Weather-protected, Type II
   e. Drip-proof fully guarded
   f. Drip-proof
   g. Splash-proof
   h. Open
2. Provide epoxy vacuum pressure impregnated (VPI) motors when indicated in the driven equipment specifications. The windings in squirrel cage induction motors shall be completely filled with an insulating resin epoxy which also forms a protective coating.
   a. The stator windings on all motors, except 56 and 140 frame sizes, shall be vacuum pressure impregnated with an epoxy or shall be epoxy encapsulated 56 and 140 frame size motors shall have extra dips and bakes of Class F varnish.

3. Housing, end brackets and all outside components shall be cast iron or aluminum except WP II or open drip-proof enclosures which may be fabricated steel or aluminum.
4. A condensate drain hole shall be provided on all enclosed motors. The drain hole shall be provided in each end bracket on horizontal motors. A single drain hole shall be provided in the lower bracket of vertical motors. Open motors shall be self-draining. A U.L. approved breather/drain shall be provided on all explosion-proof motors.
5. The motors shall be equipped with terminal boxes for all conduit and wire connections as required.
   a. The terminal boxes shall be properly sized, diagonally split, cast iron, and rotatable in 90-degree steps. Provide a gasket between the box and motor frame and between the box and the cover. Terminal boxes shall be attached to the motor frame with grade 5 zinc plated and chromated steel bolts or cap screws. All terminal boxes shall have threaded holes for conduit entrance.
6. The castings shall be coated with a red-oxide zinc-chromate primer, and finished with a corrosion resistant epoxy coating. All fabricated steel enclosures shall be coated on all inside and outside surfaces except shafts and register fits.
7. Provide stainless steel fasteners and nameplates of ample size with clear numerals and letters.
   a. Nameplates shall indicate the manufacturer, serial number, model number, type, horsepower, phase, hertz, volts, design, full load amperes, locked rotor code letter, service factor, speed, insulation class, temperature rating, information required by NEMA MG 1-10.38 and other essential data.
   b. Nameplate data shall be in the English language and units.
   c. Nameplates shall be secured to the motor frame with corrosion resisting pins in accessible locations.
8. Ground lugs shall be provided in all main motor terminal boxes for grounding.
9. All motors shall have copper windings.
10. Antifriction bearings shall be grease lubricated except for vertical, high thrust motors, which may require oil lubrication.
    a. Grease lubricated bearings shall include accessible fittings for in-service, periodic relubrication.
    b. Oil lubricated bearings shall be a reservoir type with a sump for settling foreign matter, accessible and exterior fill and drain plugs and a visual oil level indicator with maximum and minimum indicator levels.
    c. Horizontal, direct connected motor bearings shall be designed for 1-year minimum B-10 bearing life at NEMA minimum V-belt criteria for the rating.
    d. Horizontal, V-belt connected motor bearings shall be designed for 3-year minimum B-10 bearing life for the application V-belt drive or 1-year minimum B-10 bearing lift at NEMA minimum V-belt criteria whichever is more restrictive.
    e. Vertical motor bearings shall be designed for 2-year minimum B-10 bearing life at design operating thrust. At maximum operating thrust, B-10 life shall not be less than one year. Transient (shut-off) thrust shall not exceed 30% of the static deformation limit. Motor shall be designed for 30% momentary upthrust capacity except 3600 RPM units which must have 30% continuous upthrust capacity. Any system which exceeds 30% upthrust must be designed for continuous upthrust at one year B-10 bearing lift.
    f. Pre-lubricated, double shield bearings are acceptable only on single phase and 56 frame motors.
11. The dynamic balance of motors built in frame size 143 and larger shall be 0.001 inches total amplitude or peak to peak displacement.
12. Accessories for motors 125 HP and larger shall include the following:
    a. A set of non-linear, resistance temperature detectors, "PTC thermistors" or equal, shall be embedded in the winding. The detector relays shall have one normally

open and one normally closed (spare) contacts, and shall be mounted in the motor control center. One relay shall have the normally open contact to actuate an alarm and shut down motor when the temperature rise reaches 15 degrees centigrade below the motor insulation temperature rating when operating in an ambient temperature of 40^0C. The detector shall protect the motor against overheating caused by overloads, loss of cooling medium and single phasing.

b. A set of non-linear, resistance temperature detectors, "PTC thermistors" or equal, shall be required for bearing temperature. The detector relay shall have one normally open and one normally closed (spare) contacts, and shall be mounted in a box with cover on the motor frame. One relay shall have the normally open contact to actuate an alarm and shut down motor when the temperature rise reaches 15 degrees centigrade below the motor insulation temperature rating when operating in an ambient temperature of 40^0C. The detector shall protect the motor against overheating caused by loss of cooling medium and bearing failure.

c. All of the above accessories shall have wires brought out in a terminal box or boxes.

13. Motors shall have a guaranteed maximum noise level that shall be in accordance with NEMA MG3-1974 Standards Publication for Sound Level Prediction for Installed Rotating Electrical Machines, except where more restrictive requirements are outlined in other Sections of the Specifications.

PART 3 - EXECUTION

3.1 GENERAL

A. Provide all the equipment installations and wiring installations, including connections as indicated, specified and required. Assure proper fits for all equipment and materials in the spaces as shown on the Drawings.

B. Motors:

1. Provide power, control, alarm, and grounding installations for all motors as indicated and required.
2. Check the connections and provide correct rotation for all motors.
3. Record the full load current to each motor, and the overload relay rating in each motor starter for the certified data submittal.
4. Provide the required wiring for all control equipment that shall be furnished and installed by other Sections of the Specifications.
5. Field damaged factory finish on equipment shall be touched-up with paint that is equal in quality and color to the original factory finish.

3.2 FACTORY TESTS

A. All Motors shall be given a standard commercial test as defined by NEMA MG 1-12.51 and IEEE 112a and b.

B. All Motors 125 horsepower and Larger shall be given complete tests as defined by IEEE 112 Method A and B. Report of test shall include data on IEEE 112 Form A2, as applicable to the motor tested. Test shall confirm the following:

1. Service factor temperature.
2. Efficiency
3. Torque
4. No load, full voltage vibration level.

C. Noise Tests shall be determined by measurement in accordance with the latest revision of IEEE-85, Test Procedure for Air Borne Noise Measurements and Rotating Electrical Machinery. The motor shall be operating during test on rubber at no load with rated voltage and frequency.

D. Vibration Tests shall be per NEMA MG 1-12.06 and MG 1-2053.

E. All Testing, other than lock conditions shall be at full voltage ±5 percent.

3.3 FIELD CHECKS

A. Motor Installations shall be complete and correct.

B. Operation Tests shall be performed to observe that motors start, run and stop satisfactorily under design load.

END OF SECTION

SECTION 16160 – ENCLOSURES

PART 1 - GENERAL

1.1 SCOPE OF WORK

A. This specification includes enclosures to house electrical controls, instruments, terminal blocks, and serve junction boxes where shown on the Plans.

1.2 SUBMITTALS

A. Products shall be submitted in accordance with Section 01300, Section 16000, and elsewhere in the Contract Documents prior to installation.

1.3 MANUFACTURERS

A. Enclosures shall be manufactured by Hammond, Hoffman, Rittal, or equal.

PART 2 - PRODUCTS

2.1 STEEL

A. Enclosures shall be fabricated from 14-gauge steel with seams that are continuously welded. Doors shall have full length piano hinges with the door removable by pulling the hinge pin.

B. A rolled lip shall be provided around three sides of the door and around all sides of the enclosure opening. The gasket shall be attached with oil-resistant adhesive and held in place with steel retaining strips. Exterior hardware, such as clamps, screws, and hinge pins, shall be of stainless steel for outdoor installations. A hasp and staple shall be provided for padlocking. Each enclosure shall have a print pocket. All wires entering or leaving the enclosure shall terminate on terminal strips. All wires and terminals shall be clearly identified as specified elsewhere in these specifications.

C. Finish shall be white enamel interior, light gray enamel, ANSI 61 exterior, over phosphatized surfaces. Special finishes and colors shall be furnished for wet locations. Plans should be checked for special conditions.

2.2 NEMA RATING

A. Unless otherwise indicated on the Plans, enclosures shall be NEMA 12 for indoors, NEMA 4X for corrosive areas and outdoor installations. NEMA 4X enclosures shall be stainless steel, unless noted otherwise. NEMA 4 enclosures shall also be used in wet, or wash down areas.

2.3 FIBERGLASS

A. Enclosures shall be heavy-duty, compression molded, fiberglass reinforced polyester, high impact, heat resistant, NEMA 4X.

2.4 ANCHORAGE

A. Anchors for enclosures shall be installed as indicated in Drawings.

PART 3 - EXECUTION

3.1 INSTALLATION

A. Enclosures shall be installed as indicated on the Plans, and according to manufacturer's instructions.

B. Enclosures shall be properly grounded, and shall include ground straps connected to hinged doors and accessories.

END OF SECTION

SECTION 16170 – GROUNDING

PART 1 - GENERAL

1.1 SCOPE OF WORK

A. A ground grid system consisting of the indicated configuration of copper wires, and ground rods, or concrete encased grounding electrodes ("UFERs") shall be provided to minimize station potential gradient irregularities and drain leakage and fault currents to earth.

B. Whether indicated on the Plans or not, neutral conductors, cable shields, metallic conduits, cable terminations, junction boxes, poles, surge arresters, and other non-current-carrying metallic parts of equipment shall be grounded.

1.2 SUBMITTALS

A. Products shall be submitted in accordance with Section 01300, Section 16000, and elsewhere in the Contract Documents prior to installation.

1.3 REFERENCES

A. National Electrical Code (NEC) Article 250

PART 2 - PRODUCTS

2.1 GENERAL REQUIREMENTS

A. A resistance of not greater than 25 ohms shall be provided, unless otherwise specified. Ground resistances shall be measured as herein described. Resistances of systems requiring separate ground rods, rather than a counterpoise, shall be measured separately before bonding below grade. The combined ground resistance of separate systems bonded together below grade may be used to meet the specified ground resistance, but the minimum number of rods indicated must still be provided.

2.2 GROUND RODS

A. Ground rods shall be copper-clad steel conforming to UL 467, 314 inch in diameter by 10 feet in length. Unless otherwise indicated, ground rods shall be driven into the ground until tops of rods are approximately 6 inches below finished grade. In counterpoise systems, tops of ground rods shall be approximately at elevations of counterpoises. Where the specified ground resistance cannot be met with the indicated number of ground rods, additional ground rods, longer ground rods, or deep-driven sectional rods shall be installed and connected until the specified resistance is obtained, except that not more than three additional ground rods shall be required at any one installation. Ground rods shall be spaced as evenly as possible at least 6 feet apart and connected below grade.

2.3 CONNECTIONS

A. Connections above grade shall be made with bolted solderless connectors, and those below grade shall be made by a fusion-welding process. In lieu of a fusion-welding process, a compression ground grid connector of a type which uses a hydraulic compression tool to provide the correct circumferential pressure may be used. Tools and dies shall be as recommended by the manufacturer. An embossing die code or other standard method shall provide visible indication that a connector has been adequately compressed on the ground wire.

2.4 GROUNDING ELECTRODE CONDUCTOR

A. Service entrance ground wires shall be sized in accordance with 2020 NEC Table 250-66, unless otherwise indicated on the Plans. After being located to provide maximum physical protection, exposed ground wires shall be securely attached to structural supports at not more than 2-foot intervals with suitable fasteners. Bends greater than 45 degrees in

ground wires are not permitted. Routing of ground conductors through concrete should be avoided, except where specifically called for in these Documents. When concrete penetration is necessary, nonmetallic conduit shall be cast flush with the points of concrete entrance and exit, so as to provide an opening for the ground wire. The opening shall be sealed with a suitable compound after installation of the ground wire.

2.5 EQUIPMENT GROUNDING CONDUCTOR

A. Neutral conductors shall be grounded where indicated. Equipment grounding conductors shall be sized in accordance with 2020 NEC Table 250-122, unless otherwise indicated. Ground wires shall be protected by conduit, where such wires run exposed above grade in nonfence-enclosed areas, or are run through concrete construction. Where concrete penetration is necessary, nonmetallic conduit shall be cast flush with the points of concrete entrance and exit, so as to provide an opening for the ground wire. The opening shall be sealed with a suitable compound after installation of the ground wire. Bends greater than 45 degrees in ground wire connections to the ground rods, or counterpoises are not permitted.

2.6 EQUIPMENT GROUNDING

A. Equipment frames of motor housings, metallic tanks, metallic equipment enclosures, metal splicing boxes, chain-link fencing, and other metallic noncurrent-carrying metal items, shall be grounded. Connections to earth shall be made in the same manner as required for system grounding. Equipment or devices operating at less than 750 volts may be connected to secondary neutral grounding electrodes.

2.7 SURGE ARRESTER GROUNDING

A. Surge arresters shall be grounded. Resistance to ground for intermediate-class arresters shall be not more than 10 ohms and for distribution-class arresters shall be not more than 25 ohms. Ground wire connections shall be not less than No. 4 AWG for distribution arresters and No. 110 AWG for intermediate arresters. Connections to earth shall be made in the same manner as required for neutral conductors. Surge arrester grounds may use the same ground wires provided for equipment operating at more than 750 volts. Surge arrester and secondary neutral grounds shall be separate from and independent of each other but both grounds shall be bonded together below grade at the ground rods or may utilize a common counterpoise.

2.8 LIGHTING POLE GROUNDING

A. Base of fighting poles shall be connected to an adjacent ground rod as indicated on Plans. A ground connection from poles back to neutral ground points shall also be provided utilizing equipment grounding conductor.

2.9 METALLIC STRUCTURES

A. Metallic structures and buildings shall be grounded per NEC.

2.10 GROUNDING RINGS

A. When required, grounding rings shall be installed using bare copper cable with ground rods at least 25 feet intervals using thermoweld connecting means as indicated on Plans in accordance with NEC requirements.

PART 3 - EXECUTION

3.1 INSTALLATION

A. It is the intent of these Contract Documents that all device and equipment grounds shall be run as a separate conductor in the conduit from the equipment to the distribution panels or system ground. Wireways and enclosures shall be properly bonded and grounded, and ground conductors shall be run for all circuits.

B. Equipment cases and devices shall be grounded. Ground rods shall be driven, and concrete encased conduits installed, before a building, or structure is built, and ground conductors brought through the concrete to accessible points for grounding equipment. These systems shall be installed at each structure, where transformers, switchboards, panelboards, and MCCs are installed.

C. Duct banks shall contain a concrete encased system bare copper ground conductor. The system ground conductors shall run continuously in duct banks, through handholes and other raceway boxes. The system ground shall be connected to the structure grounding systems to provide a continuous grounding system. Each metallic raceway, panel, switchboard, and other metallic devices associated with the electrical and control systems shall be bonded to this grounding system.

D. Ground rod shall be installed not less than 6 inches below grade. Equipment, neutral, and surge arrester ground wires shall be connected to the ground grid as indicated.

3.2 TESTS

A. Pre-Energization Tests --- Pre-energization tests shall include, but shall not be limited to tests that the equipment engineer is required to perform under paragraph "GENERAL REQUIREMENTS." No part of the electrical system shall be energized until all station grounding system components have been tested and demonstrated to comply with the requirements specified, and until associated test reports have been submitted and approved.

B. Operating Test - After the installation is completed, the CONTRACTOR shall conduct an operating test for approval. Equipment shall be demonstrated to operate in accordance with the requirements herein. Tests shall be performed in the presence of the ENGINEER. The CONTRACTOR shall furnish instruments and personnel required for the test.

C. Ground-Resistance Measurements - Ground-resistance measurements of each ground rod shall be taken and certified by the CONTRACTOR to the ENGINEER. No part of the electrical distribution system shall be energized prior to the resistance testing of that system's ground rods and grounding system and submission of test results to the ENGINEER. Test reports shall indicate the location of the ground rod and grounding system and the resistance and the soil conditions at the time the test was performed. When the building water service is used as a ground or part of the grounding system, ground-resistance measurements shall also be made of this connection. Ground-resistance measurements shall be made in normally dry weather, not less than 48 hours after rainfall, and with the ground under test isolated from other grounds. The resistance to ground shall be measured using the fall-of-potential method described in IEEE Std 142 and Std 81.

3.3 TEST RESULTS

A. The CONTRACTOR shall perform the above tests and submit a certified test report prior to energizing the equipment.

END OF SECTION

SECTION 16190 – SUPPORTING DEVICES

PART 1 - GENERAL

1.1 SCOPE OF WORK

A. Supports, anchors, sleeves, and seals, are indicated on the Plans, schedules, and specified in other sections of these Specifications.

B. Types of supports, anchors, sleeves and seals specified in this section include the following:
   1. One-hole Conduit Straps
   2. One-Hole Conduit Straps with Clamp Backs
   3. Two-Hole Conduit Straps
   4. Conduit Hangers
   5. I-beam Clamps
   6. Channel Clamps
   7. Round Steel Rods
   8. Drop-in Anchors
   9. Wedge Type Anchor Bolts
   10. Lead Expansion Anchors
   11. Toggle Bolts
   12. Wall and Floor Seals
   13. Cable Supports
   14. U-Channel Strut System
   15. Sleeves

1.2 SUBMITTALS

A. Products shall be submitted in accordance with Section 01300, Section 16000, and elsewhere in the Contract Documents prior to installation.

PART 2 - PRODUCTS

2.1 MANUFACTURERS

A. Acceptable Manufacturers: Subject to compliance with requirements, manufacturers offering products which may be incorporated in the work include, but are not limited to, the following: Abbeon Cal Inc., Ackerman Johnson Fastening Systems Inc., Elcen Metal Products Co., Ideal Industries, Inc., Josyln Mfg and Supply Co., McGraw Edison Co., Rawlplug Co. Inc., Star Expansion Co., U.S. Expansion Bolt Co., Allied Tube and Conduit Corp., B-Line Systems, Inc., Greenfield Mfg Co., Inc., Midland-Ross Corp., OZlGedney Div; General Signal Corp., Power-Strut Div.; Van Huffel Tube Corp., and Unistrut Div; GTE Products Corp., and Robroy Industries.

2.2 GENERAL

A. Provide supporting devices that comply with manufacturer's standard materials, design, and construction, in accordance with published product information, and as required for complete installations, and as specified herein.

2.3 SUPPORTS

A. Provide supporting devices of types, sizes, and materials indicated, and having the following construction features:
   1. One-Hole Conduit Straps: For supporting electrical metallic tubing, and liquidtight flexible conduit; zinc plated steel, stainless steel or galvanized steel; snap-on, heavy duty.

2. One-Hole Conduit Straps with Clamp Backs: For supporting rigid metal conduit, and intermediate metal conduit; cast galvanized steel.
3. Two-Hole Conduit Straps: For supporting electrical metallic tubing, rigid metal conduit, and intermediate metal conduit; zinc plated steel, stainless steel or galvanized steel.
4. Conduit Hangers: For supporting electrical metallic tubing, rigid metal conduit, and intermediate metal conduit; zinc plated steel, stainless steel or galvanized steel.
5. I-Beam Clamps: Electroplated zinc or hot dipped galvanized malleable iron.
6. Channel Clamps: Electroplated zinc or hot dipped galvanized steel.
7. Round Steel Rod: National coarse thread, electroplated.

2.4 ANCHORS

A. Provide anchors of types, sizes, and materials indicated, with the following construction features:
1. Lead Expansion Anchors: For CMU walls, 114"-20 threads, set tool required.
2. Toggle Bolts: Electroplated steel, size as required.
3. Drop-in Anchors: Stainless steel, size as required.
4. Anchor Bolts: Stainless steel, size as required.
5. Half-round head, non-removable anchor bolts shall not be used.

2.5 SEALS

A. Provide seals of types, sizes and materials indicated; with the following construction features:
1. Wall and Floor Seals: Provide factory-assembled watertight wall and floor seals, of types and sized indicated; suitable for sealing around conduit, pipe, or tubing passing through concrete floors and walls. Construct seals with steel sleeves, malleable iron body, neoprene sealing grommets and rings, metal pressure rings, pressure clamps, and cap screws.
2. Conduit sealing bushings shall be manufactured by O-Z/Gedney, Model CSMI, or equal.
3. The conductor sealing bushings shall be manufactured by O-Z/Gedney, Model CSBG, or equal.

2.6 CONDUIT CABLE SUPPORTS

A. Provide cable supports with insulating wedging plug for non-armored type electrical cables in risers; construct 2" rigid metal conduit; 3-wires, type wire as indicated; construct body of malleable-iron casting with hot-dip galvanized finish.

2.7 U-CHANNEL STRUT SYSTEM

A. Provide U-channel strut system for supporting electrical equipment, 12-gage hot-dip galvanized steel, of types and sizes indicated; construct with 9/16" diameter holes, 8" O.C. on top surface, with the following fittings that mate and match with U-Channel:
1. Fixture hangers
2. Channel hangers
3. End caps
4. Beam clamps
5. Wiring stud
6. Thinwall conduit clamps
7. Rigid conduit clamps
8. Post Bases
9. U-bolts

2.8 PIPE SLEEVES

A. Provide pipe sleeves from the following:

1. Steel Pipe: Fabricate from Schedule 40 galvanized steel pipe; remove burrs.

2.9 PVC COATED U-CHANNEL STRUT SYSTEM

A. Provide PVC Coated U-channel strut system for supporting electrical equipment, 20 mil PVC coated steel, of types and sizes indicated; construct with 9/16" diameter holes, 8" O.C. on top surface, with all Stainless-Steel hardware, and the following fittings that mate and match with PVC Coated U-Channel:
   1. PVC Coated Strut nut
   2. PVC Coated Pipe straps
   3. Touch up compound (Gray)

2.10 STAINLESS STEEL U-CHANNEL STRUT SYSTEM

A. Provide Stainless Steel U-channel strut system for supporting electrical equipment, of types and sizes indicated; construct with 9/16" diameter holes, 8" O.C. on top surface, with all stainless-steel hardware, and the following stainless-steel fittings that mate and match with Stainless Steel U-Channel:
   1. Fixture hangers
   2. Channel hangers
   3. End caps
   4. Beam clamps
   5. Wiring stud
   6. Post bases
   7. Rigid conduit clamps
   8. U-bolts

PART 3 - EXECUTION

3.1 INSTALLATION

A. Install hangers, anchors, sleeves and seals as indicated, in accordance with the manufacturer’s written instructions and with recognized industry practices to ensure supporting devices comply with requirements. Comply with requirements of NECA and NEC for installation of supporting devices.

B. Coordinate with other electrical work, including raceway and wiring work, as necessary to interface installation of supporting devices with other work.

C. Install hangers, supports, clamps and attachments to support piping properly from building structure. Arrange for grouping of 2 or more parallel runs of conduits to be supported together on channel type hangers where possible. Install supports with spacing indicated and in compliance with NEC requirements.

D. Torque sleeve seal nuts, complying with the manufacturer's recommended values. Ensure that sealing grommets expand to form watertight seal.

E. Comply with the manufacturer's recommendations for touch up of field cut ends or damaged PVC coated U-channel and fittings.

F. Remove burrs and apply a cold zinc galvanizing paint to field cut galvanized U-channel strut.

END OF SECTION

SECTION 16195 – ELECTRICAL IDENTIFICATION

PART 1 – GENERAL

1.1 SCOPE OF WORK

A. Electrical identification work specified in this section covers the following:
   1. Buried cable warnings
   2. Electrical power, control and communication conductors
   3. Operational instructions and warnings
   4. Danger signs
   5. Equipment/system identification signs

1.2 SUBMITTALS

A. Submittals to the ENGINEER shall include the following:
   1. Manufacturers data on electrical identification materials and products
   2. Samples of each color, lettering style and other graphic representation required for each identification material or system

1.3 MANUFACTURERS

A. Subject to compliance with requirements, manufacturers offering electrical identification products maybe incorporated in the work include, but not limited to, the following:
   1. Brady, W.H. Co.
   2. Ideal Industries, Inc.
   3. Panduit Corp.
   4. or, equal

1.4 QUALITY COMPLIANCE

A. Comply with applicable requirements of UL Std. 969, "Marking and Labeling Systems", pertaining to electrical identification systems.

B. Comply with applicable requirements of NEMA Std. No's WC-1 and WC-2 pertaining to identification of power and control conductors.

PART 2 – PRODUCTS

2.1 GENERAL

A. Except as otherwise indicated, provide manufacturer's standard products of categories and types required for each application. Where more than single type is specified for an application, selection is Installer's option, but provide single selection for each application.

2.2 COLOR CODED CONDUIT MARKERS

A. Provide manufacturer's standard pre-printed, flexible or semi-rigid, permanent, plastic-sheet conduit markers, extending 360 degrees around conduits; designed for attachment to conduit by adhesive, adhesive lap joint of marker, matching adhesive plastic tape at each end of marker, or pretensioned snap-on. Except as otherwise indicated, provide lettering that indicates voltage of conductor{s} in conduit. Provide 8" minimum length for 2" and smaller conduit, 12" length for larger conduit.

B. Unless otherwise indicated or required by governing regulations, provide white markers with black letters.

2.3 CABLE AND CONDUCTOR WIRE MARKERS

A. Cable and conductor wire markers shall be self laminating vinyl on white background, printed using a Brady TLS2200 printer, Seton printer, or equal. Handwritten wire markers are not acceptable.

2.4 SELF-ADHESIVE PLASTIC SIGNS

A. Provide manufacturer's standard, self-adhesive or pressure-sensitive, pre-printed, flexible vinyl signs for operational instructions or warnings; of sizes suitable for application areas and adequate for visibility, with proper wording for each application, e.g., 208V, EXHAUST FAN, RECTIFIER.

B. Unless otherwise indicated or required by governing regulations, provide white signs with black lettering.

2.5 LETTERING AND GRAPHICS

A. Coordinate names, abbreviations and other designations used in electrical identification work, with corresponding designations shown, specified or scheduled. Provide numbers, lettering and wording as indicated or, if not otherwise indicated, as recommended by manufacturers or as required for proper identification and operation/maintenance of electrical systems and equipment. Comply with ANSI A13.1 pertaining to minimum sizes for letters and numbers.

PART 3 – EXECUTION

3.1 INSTALLATION

A. Install electrical identification products as indicated, in accordance with manufacturer's written instructions, and requirements of NEC.

B. Where identification is to be applied to surfaces that require finish, install identification after completion of painting.

C. Comply with governing regulations and requests of governing authorities for identification of electrical work.

3.2 CONDUIT IDENTIFICATION

A. Where electrical conduit is exposed in spaces with exposed mechanical piping that is identified by a color-coded method, apply color-coded identification on electrical conduit in manner similar to piping identification. Except as otherwise indicated, use white as coded color for conduit.

3.3 CABLE/CONDUCTOR IDENTIFICATION

A. Apply cable conductor identification, including voltage, phase and feeder number, on each cable conductor in each box enclosure/cabinet where wires of more than one circuit or communication/signal system are present, except where another form of identification (such as color-coded conductors) is provided. Match identification with marking system used in panelboards, shop drawings, contract documents, and similar previously established identification for project's electrical work.

3.4 EQUIPMENT/SYSTEM IDENTIFICATION

A. Install engraved plastic-laminate sign on each major unit of electrical equipment in building; including central or master unit of each electrical system including communication-control-signal systems, unless unit is specified with its own self-explanatory identification or signal system. Except as otherwise indicated, provide single line of text, 1/2" high lettering on 1-1/2" high sign (2" high where 2 lines are required), white lettering in black field. Provide text matching terminology and numbering of the contract documents and shop drawings. Provide signs for each unit of the following categories of electrical work:
   1. Panelboards, electrical cabinets and enclosures
   2. Access panel/doors to electrical facilities
   3. Major electrical switchgear.

B. Install signs at locations indicated or, where not otherwise indicated, at location for best convenience of viewing without interference with operation and maintenance of equipment. Secure to substrate with brass or stainless-steel screws, except use adhesive where screws should not or cannot penetrate the substrate.

C. All field instruments and devices shall have an identification tag meeting the following requirements:

1. Device designation or field instrument number on tag shall be as indicated on the Drawings or field instrument schedule below.
2. Device designation shall be permanently etched or embossed onto a stainless-steel tag which shall be fastened to the device housing with stainless steel rivets or self tapping screws of appropriate size.
3. Where neither of the above type of tag fastening can be accomplished, permanently attach the tag to the device or instrument by a circlet of 1/16-inch diameter stainless steel wire rope.
4. Panel mounted devices and field instruments shall be identified with nameplates as described herein.

3.5 CIRCUIT. IDENTIFICATION

A. The 3-phase wires shall be identified at the switchgear, panelboards and motor control centers as Phases A, B, and C. At 480V, Phase A shall be brown, Phase B shall be orange, and Phase C shall be yellow.

B. In addition to color coding all conductors, each conductor shall be identified in each pull box, manhole, panelboard, cable tray, or termination with circuit identification markers. This identification is applicable to all power, control, alarm, and instrumentation conductors and these markings shall be recorded on the Record Documents. Markers shall be slip-on PVC sleeve type as manufactured by Brady, Seton, or equal.

C. Markers for other cabling shall be B-292 vinyl as manufactured by Brady, Seton, or equal.

3.6 AUTOMATIC EQUIPMENT WARNING SIGNS

A. Permanent warning signs shall be mounted at all mechanical equipment that may be started automatically or from remote locations. Signs shall be in accordance with OSHA regulations and shall be suitable for exterior use. The warning signs shall be fastened with round head brass screws or bolts, located and mounted in a manner acceptable to the ENGINEER.

B. Warning signs shall be 7 inches high by 10 inches wide, colored yellow and black, on not less than 18-gauge vitreous enameling stock. Sign shall read:

CAUTION
THIS EQUIPMENT STARTS
AUTOMATICALLY
BY REMOTE CONTROL

3.7 HIGH VOLTAGE WARNING SIGNS

A. Permanent and conspicuous warning signs shall be mounted on all equipment, doorways to equipment rooms, pull boxes, manholes, where the voltage exceeds 600 volts.

B. Signs shall be in accordance with OSHA regulation, and shall be suitable for exterior use. The warning signs shall be fastened with round head brass screws or bolts, located and mounted in a manner acceptable to the ENGINEER.

C. Signs shall be 7 inches high by 10 inches wide, colored red and white, on not less than 18-gauge vitreous enameling stock. Sign shall read:

WARNING
HIGH VOLTAGE
KEEP OUT

3.8 CONDUCTOR FASTENERS

A. Glue-on type conductor fasteners shall not be used in any panels, panelboards, switchboards, switchgear, motor control centers, or other enclosures containing electrical devices and/or conductors.

END OF SECTION

SECTION 16416 – PANELBOARDS

PART 1 – GENERAL

1.1 SCOPE OF WORK

A. This section covers electrical panelboards.

1.2 SUBMITTALS

A. Products shall be submitted in accordance with the Contract Documents prior to installation.

B. Panel layout with alphanumeric designation, branch circuit breaker sizes and types, AIC rating, bus sizes, and other characteristics.

1.3 QUALITY ASSURANCE

A. NEMA PB-1, Panelboards

B. NEC 2020

C. UL67, Panelboards

PART 2 – PRODUCTS

2.1 PANELBOARDS

A. Dead-front panelboards, including lighting distribution and control panels, shall be furnished and installed as indicated on the Plans. Buses shall be copper. Mounting and type of enclosures shall be as indicated on the Plans. Where not indicated, indoor enclosures shall be NEMA 12 and outdoor enclosures shall be NEMA 3R. The minimum interrupting capacity of any device shall be as indicated on the Plans.

B. Protective devices shall be replaceable without disturbing adjacent units. Wire connectors shall be suitable for wire sizes indicated. Branch circuits shall be numbered as indicated on the Plans, and a complete typed circuit schedule shall be furnished under a transparent cover, and affixed to the panel. Phase busing shall be full height without reduction. Full size neutral bars shall be included, and shall have suitable lug for each outgoing circuit requiring neutral connection. Spaces for future protective devices provided in lighting panels shall be bused for the maximum device that can be fitted into them.

C. Panelboards shall be finished with a primer, rust resistant phosphate undercoat and two coats of oven baked enamel with finish ANSI grey. Doors shall not uncover any live parts, and shall be hinged and have latches that require no tool to operate. Panelboard doors shall be lockable. Lock and two keys shall be furnished.

D. Each panelboard shall have, on the outside of the door, a lamicoid nameplate with 3/4-inch letters as specified elsewhere in these Contract Documents.

E. Panelboards shall be manufactured by Cutler Hammer, General Electric, or equal,

F. Panelboards shall be service entrance rated where required, and as shown on the Plans.

G. Panelboards shall be bolt-on type and provided with spare breakers as indicated on the drawings.

H. Panelboards shall include a typed schedule of breakers located inside the panel.

PART 3 – EXECUTION

3.1 INSTALLATION

A. Panelboards shall be installed as indicated on the plans and according to manufacturer's instructions.

B. Provide grounding per NEC 408.40, and Section 16170.

C. CONTRACTOR shall verify all NEC clearance requirements prior to installation.

END OF SECTION

SECTION 16440 – DISCONNECT SWITCHES

PART 1 – GENERAL

1.1 SCOPE OF WORK

A. This section covers electrical disconnecting switches.

1.2 SUBMITTALS

A. Products shall be submitted in accordance with Section 01300, Section 16000, and elsewhere in the Contract Documents prior to installation.

PART 2 – PRODUCTS

2.1 DISCONNECT SWITCHES

A. Disconnect switches shall be heavy-duty safety switches with a quick-make, quick-break operating mechanism, with full cover interlock, and indicator handle. The disconnect switches shall be furnished with fuses of the size indicated on the Plans. One set of spare fuses shall be furnished for each fused disconnect switch. Disconnect switches shall be NEMA type HD heavy duty construction, UL 98 listed.

B. Enclosures shall be rated NEMA 12 for indoor use, and NEMA 3R for outdoor use, unless otherwise indicated on the Plans.

C. Disconnect switch handle shall be padlockable.

D. Disconnect switches in the corrosive areas as indicated on the Plans, shall be NEMA 4X, 304 stainless steel.

E. Disconnect switches shall be as manufactured by Square D, Cutler Hammer, Allen-Bradley, General Electric, or equal.

PART 3 – EXECUTION

3.1 INSTALLATION

A. Disconnect switches shall be installed as indicated on the Plans.

B. Provide grounding per NEC, and Section 16170.

END OF SECTION

SECTION 16476 – LOW VOLTAGE CIRCUIT BREAKERS

PART 1 – GENERAL

1.1 SCOPE OF WORK

A. The CONTRACTOR shall furnish and install, low voltage circuit breakers, as indicated on the Drawings and specified herein.

1.2 SUBMITTALS

A. Products shall be submitted in accordance with Section 01300, Section 16000, and elsewhere in the Contract Documents prior to installation.

1.3 QUALITY ASSURANCE

A. The breaker manufacturer's facilities shall be ISO 9001 certified.

PART 2 – PRODUCTS

2.1 GENERAL

A. Circuit breakers shall be manufactured by Cutler-Hammer, Allen-Bradley, General Electric, or equal.

B. Circuit breaker frame, trip, short circuit, and interruption ratings shall be as indicated on the Drawings, except that they shall be coordinated with the ratings of the equipment actually furnished, and shall be modified where necessary to suit the equipment. Circuit breakers to be used in motor control centers shall be as indicated on the Drawings. Where no indication of type is given on the Drawings circuit breakers protecting motors shall be motor circuit protectors, and other circuit breakers shall be molded case type.

C. Circuit breaker for mounting in motor control centers, or for separate mounting, shall be of the air-break type, quick-make and quick-break, 600 volt, with number of poles as indicated on the Drawings.

D. Each pole of the circuit breaker shall provide inverse time delay, and instantaneous circuit protection.

E. The breakers shall be operated by a handle, and shall have a switching mechanism that is mechanically trip free from the handle, so that the contacts cannot be held closed against short circuits, and abnormal currents. Tripping due to overload, or short circuit shall be clearly indicated by the handle automatically assuming a position between the manual ON and OFF positions. Latch surfaces shall be ground and polished. Poles shall be constructed so that they open, close, and trip simultaneously.

F. Breakers must be completely enclosed in a molded case. Non-interchangeable trip breakers shall have their covers sealed; interchangeable trip breakers shall have the trip unit sealed to prevent tampering. Ampere ratings shall be clearly visible. Contacts shall be non-welding silver alloy. Arc extinction must be accomplished by means of arc chutes. The minimum interrupting ratings of the circuit breakers shall be at least equal to the available short circuit current at the line terminals.

G. Circuit breakers shall conform to the applicable requirements of NEMA Standards Publication No. AB1.

H. Molded case circuit breakers shall be ambient temperature compensating that provides inverse time delay overload and instantaneous short circuit protection by means of a thermalmagnetic element. Compensation shall be accomplished by a secondary bi-metal that will allow the breaker to carry rated current between 25 degrees C and 50 degrees C with tripping characteristics that are approximately the same throughout this temperature range.

I. On breakers with interchangeable, thermal, adjustable magnetic trip, the accessibility and position of the adjustment knob shall not be changed from those on the standard breaker.

J. Unless mounted in a switchboard, or panelboard, circuit breakers shall be housed in a NEMA rated enclosure as described elsewhere in these specifications.

K. Provide circuit breakers with shunt trip mechanisms where shown on the Drawings.

PART 3 – EXECUTION

3.1 INSTALLATION

A. Circuit breakers shall be installed as indicated on the Drawings and per manufacturer's instructions.

END OF SECTION

SECTION 16477 – 600 V FUSES

PART 1 - GENERAL

1.1 SCOPE OF WORK

A. This section covers the requirements for protective fusing on this project. The CONTRACTOR shall furnish and install fuses and fuse holders per the Drawings and equipment manufacturers recommendations.

B. This specification includes the general requirements for various types of fuses whether they are shown on the Drawings or not. If fusing is required by codes or manufacturers recommendations, but not shown on the Drawings, this specification shall apply to the type of fusing provided by the CONTRACTOR.

C. Types of fuses specified in this section include the following:
   1. Class L time-delay.
   2. Class L fast-acting.
   3. Class RK1 time-delay.
   4. Class RK1 and Class J current-limiting.
   5. Class RK5 time-delay.
   6. Class K5 time-delay, noncurrent-limiting.
   7. Class T current-limiting.

1.2 QUALITY ASSURANCE

A. The fuse manufacturer's facilities shall be ISO 9001 certified.

1.3 CODES AND STANDARDS

A. UL Compliance and Labeling: Comply with applicable provisions of UL 198D, "High-Interrupting-Capacity Class K Fuses". Provide over-current protective devices which are UL-listed and labeled.

B. NEC Compliance: Comply with NEC as applicable to construction and installation of fusible devices.

C. ANSI Compliance: Comply with applicable requirements of ANSI C97.1 "Low-Voltage Cartridge Fuses 600 Volts or Less".

1.4 SUBMITTALS

A. Product Data: Submit manufacturer's technical product data on fuses, including specifications, electrical characteristics, installation instructions, furnished specialties and accessories in accordance with Section 01300, Section 16000, and the Contract Documents. In addition, include voltages and current ratings, interrupting ratings, current limitation ratings, time-current trip characteristic curves, and mounting requirements.

1.5 MANUFACTURERS

A. Subject to compliance with requirements, manufacturers offering fusible devices which may be incorporated in the work include, but are not limited to, the following: Bussmann, Gould-Shawmut, Reliance, or equal.

PART 2 - PRODUCTS

2.1 GENERAL

A. Except as otherwise indicated, provide fuses of types, sizes, ratings, and average time-current and peak let-through current characteristics indicated, which comply with manufacturer's standard design, materials, and constructed in accordance with published product information, and with industry standards and configurations.

2.2 CLASS L TIME-DELAY FUSES

A. Provide UL Class L time-delay fuses rated 600 volts, 60 Hz, with 200,000 RMS symmetrical interrupting current rating for protecting transformers, motors, and circuit-breakers.

2.3 CLASS L FAST-ACTING FUSES

A. Provide UL Class L fast-acting fuses rated 600 volts, 60 Hz, with 200,000 RMS symmetrical interrupting current rating for protecting service entrances and main feeder circuit-breakers.

2.4 CLASS RK1 TIME-DELAY FUSES

A. Provide UL Class RK1 time-delay fuses rated 600 volts, 60 Hz, with 200,000 RMS symmetrical interrupting current rating for protecting motors and circuit-breakers.

2.5 CLASS RK1 CURRENT-LIMITING FUSES

A. Provide UL Class RK1 current-limiting fuses rated 250 volts, 60 Hz, with 200,000 RMS symmetrical interrupting current rating for protecting circuit-breakers.

2.6 CLASS J CURRENT LIMITING FUSES

A. Provide UL Class J current-limiting fuses rated 600 volts, 60 Hz, with 200,000 RMS symmetrical interrupting current rating.

2.7 CLASS RK5 TIME-DELAY FUSES

A. Provide UL Class RK5 time-delay fuses rated 600 volts, 60 Hz, with 200,000 RMS symmetrical interrupting current rating for protecting motors.

2.8 CLASS K5 ONE-TIME FUSES

A. Provide UL Class K5 one-time fuses rated 250 volts, 60 Hz, with 100,000 RMS symmetrical interrupting current rating for protecting non-inductive loads.

2.9 CLASS T FUSES

A. Provide UL Class T fuses rated 600 volts, 60 Hz, with 200,000 RMS symmetrical interrupting current rating for protection of physically small devices.

PART 3 - EXECUTION

3.1 INSTALLATION

A. Fuse types and sizes shall be as indicated on the Plans. Fuses shall be installed in accordance with the National Electric Code (NEC) requirements and the manufacturer's written instructions.

B. Install fuses in proper fuse holders.

C. Where fuses are installed in the motor starters, fuses shall be sized to match the actual motor full load current.

D. Where fuses are installed in disconnect switches at HVAC units, the fuse sizes shall be sized to meet the HVAC manufacturer's requirements.

E. Fuses for control transformers shall be sized in accordance with the National Electrical Code.

F. Fuses shall be installed with the labels clearly visible.

3.2 FIELD QUALITY CONTROL

A. Prior to energizing fusible devices, test devices for circuit continuity and for short-circuits.

3.3 SPARE PARTS

A. Furnish 3 spare fuses of each size and type.

END OF SECTION

SECTION 16480 – MOTOR CONTROLLERS

PART 1 – GENERAL

1.1 SCOPE OF WORK

A. A motor controller is any device or group of devices normally used to start and stop a motor by making and breaking the motor circuit current. The motor controller and devices that make up the motor controller shall be governed by items indicated on the Plans, or elsewhere within these specifications.

The control panel shall be factory assembled, tested, and shall include the following but not limited to:

1. Variable frequency drive per Section 16482 – Adjustable Frequency Drive Equipment.
2. 5% Line reactor
3. Disconnect switch
4. PLC
5. LED HMI
6. Proper ventilation

B. Types of motor controllers specified in this section include the following:

1. Combination.
2. Fractional HP manual.
3. Variable Frequency Drives

C. This section applies to motor controllers rated 480 V and below.

1.2 CODE AND STANDARDS

A. Electrical Code Compliance: Comply with applicable local electrical code requirements of the authority having jurisdiction and NEC Articles 220, 250, and 430, as applicable to installation, and construction of motor controllers.

B. NFPA Compliance: Comply with applicable requirements of NFPA 70E, "Standard for Electrical Safety in the Workplace."

C. UL Compliance: Comply with applicable requirements of UL 486A and B, and UL 508, pertaining to installation of motor controllers. Provide controllers and components which are UL-listed and labeled.

D. NEMA Compliance: Comply with applicable requirements of NEMA Standard ICS 2, "Controllers, Contactors and Overload Relays" and Pub No. 250, "Enclosures for Electrical Equipment (1000 Volts Maximum)," pertaining to motor controllers and enclosures.

1.3 MAINTENANCE DATA

A. Submit maintenance data and parts list for each motor controller and component; including troubleshooting maintenance guide. Also, provide product data and shop drawings in a maintenance manual, in accordance with requirements of the Contract Documents.

1.4 SUBMITTALS

A. Product Data: Submit manufacturer’s data and installation instructions on motor controllers.

B. Shop Drawings: Submit shop drawings of motor controllers showing accurately scaled equipment locations and spatial relationships to associated motors and equipment.

C. Wiring Diagrams: Submit power and control wiring diagrams for motor controllers showing connections to electrical power panels, feeders, and equipment.

D. Submittal documents shall be provided in accordance with Section 16000 – General

Electrical Requirements, and other requirements of the Contract Documents.

PART 2 – PRODUCTS

2.1 GENERAL

A. Except as otherwise indicated, provide motor controllers and ancillary components that comply with manufacturer's standard materials, design, and construction in accordance with published product information, and as required for a complete installation.

2.2 ELECTRONIC OVERLOAD RELAYS

PART 3 – EXECUTION

A. Install motor controllers in accordance with equipment manufacturer's written instructions, and with recognized industry practices. Comply with applicable requirements of NEC, UL, and NEMA standards, to ensure that products fulfill requirements.

B. Tighten connectors and terminals, including screws and bolts, in accordance with equipment manufacturer's published torque values for equipment connectors. Where manufacturer's torque requirements are not indicated, tighten connectors and terminals to comply with tightening torques specified in UL Standards 486A and B, and the National Electrical Code.

C. Install fuses, of sizes indicated, in each fusible disconnect switch, if any.

D. Prior to energizing motor controller equipment, check with ground resistance tester, phase-to-phase, and phase-to-ground insulation resistance levels to ensure requirements are fulfilled.

E. Prior to energizing, check circuitry for electrical continuity, and for short-circuits.

F. Check rotation of each motor for proper direction.

G. Upon completion of installation of motor controller equipment and electrical circuitry, energize controller circuitry and demonstrate functioning of equipment in accordance with requirements. Where possible, correct malfunctioning units at site, then retest to demonstrate compliance; otherwise, remove and replace with new units, and retest to demonstrate compliance.

END OF SECTION

SECTION 16482 – VARIABLE FREQUENCY DRIVE (VFD) EQUIPMENT

PART 1 - GENERAL

1.1 DESCRIPTION

A. General: This specification defines the minimum requirements for Variable Frequency Drives (VFDs) and accessories for speed control of either constant or variable torque loads.

B. The CONTRACTOR shall furnish all labor, materials, equipment, appurtenances, and incidentals required to install, test, and operate the VFD systems specified herein, complete with all auxiliary items and accessories necessary to meet the highest standards for the type of service. Also included shall be provisions for instruction of the regular operating personnel in the operation and maintenance of all systems and equipment. This Section outlines the work for variable speed equipment, and forms a part of all applicable sections.

C. The VFD supplier shall provide and have complete system responsibility for the adjustable frequency drives. The supplier shall verify that the variable speed equipment's output speed, horsepower rating, and torque range agree with the driven motor requirements. The CONTRACTOR shall guarantee all work and equipment supplied in accordance with the General Conditions.

D. Motors shall be provided as specified in the section specifying the driven equipment.

E. Wiring for VFD equipment shall be provided as shown on the Drawings and as specified in Section 16000.

F. Provide the equipment and materials, including installation, conforming to the codes and standards that are listed in Section 16000, and IEEE 519.

G. Related Work Included in other Sections:
   1. Division 1 - General Requirements
   2. Division 11 – Equipment
   3. Division 15 -Mechanical
   4. Division 16 – Electrical

1.2 REFERENCES:

A. UL 508C

B. CE

C. NEC

D. Canadian Underwrites Laboratory (cUL)

E. ISO 9001

F. IEEE519

1.3 SUBMITTALS

A. Submit complete material lists, shop drawings, and technical data for Engineer's approval to the extent required in Section 16000 and Section 01300.
   1. Technical Data. Complete equipment description including detailed operation narrative and operation data shall be submitted to the Engineer with the shop drawings. The final version shall be included in the Operation and Maintenance Manual.
   2. Factory Test Reports. Submit certified test reports.
   3. Installation, Operations, and Maintenance Manuals. Submit one (1) electronic and four (4) hard-copies of complete installation, operation, and maintenance manuals.

a. Required operation and maintenance data includes, but is not limited to the following:
   1) Complete, detailed written operating instructions for each project or piece or equipment including: equipment function; operating characteristic; regulation and control; and shutdown. Manuals must be specific. General Manuals will not be accepted.
   2) Complete, detailed written preventative maintenance instruction.
   3) A complete inventory of all parts and components.
   4) Recommended spare parts lists and local sources of supply for parts.
   5) Written explanations of all safety considerations relating to operation and maintenance procedures.
   6) Name, address and phone number of manufacturers, manufacturer's local service representative, or installer.
   7) A written explanation with illustrations for each preventative maintenance task.
   8) Trouble shooting instructions.

4. Variable Speed System for Blower:
   a. The variable speed of the aeration blower shall be manually or automatically controlled. In the manual mode, control shall be available locally at the VFD Control Panel. In the remote automatic mode, control shall come from a 4-20 ma or networked (Ethernet I/P) signal, as shown in the plans.

PART 2 - PRODUCTS

2.1 ACCEPTABLE MANUFACTURERS

A. Danfoss VLT AQUA Series VFD (Variable Frequency Drive); Model FC-202.

2.2 GENERAL

A. Furnish complete VFD as specified herein or in the equipment schedule for loads designated to be variable speed. VFD’s shall be user-selectable for either constant or variable torque loads.

B. The VFD shall convert incoming fixed frequency three-phase AC power into a variable frequency and voltage for controlling the speed of three-phase AC induction motors. The VFD shall be a six-pulse input design. The VFD shall be of a PWM output design utilizing current IGBT inverter technology and voltage vector control of the output PWM waveform and shall output a waveform that closely approximates a sine wave.

C. The VFD shall be provided with an enclosure that is rated NEMA Type 4X/IP-66. A VFD that is mounted in a separate enclosure is not acceptable. The enclosure shall be suitable for installations that require protection against windblown dust and rain or splashing water. All cast aluminum parts shall be powder-coated with a durable epoxy that is capable of withstanding harsh environments.

D. The manufacturer of the VFD shall demonstrate a continuous period of manufacturing and development of VFD’s for a minimum of 40 years. VFD’s that are brand-labeled are not acceptable.

E. The VFD shall produce an output waveform capable of handling maximum motor cable distances of up to 1,000 ft. (unshielded) without tripping or derating.

F. The VFD shall utilize VVCPLUS, an output voltage-vector switching algorithm, or equivalent, in both variable and constant torque modes. VVCPLUS provides rated RMS fundamental voltage from the VFD. This allows the motor to operate at a lower temperature rise, extending its thermal life. VFD’s that cannot produce rated RMS fundamental output voltage or require the input voltage to be increased above motor

nameplate value to achieve rated RMS fundamental output voltage are not acceptable. VFD's that utilize Sine-Coded PWM or Look-up tables shall not be acceptable.

G. An Automatic Energy Optimization (AEO) selection feature shall be provided in the VFD to minimize energy consumption in variable torque applications. This feature shall optimize motor magnetization voltage and shall dynamically adjust output voltage in response to load, independent of speed. Output voltage adjustment based on frequency alone is not acceptable for single motor VT configurations.

H. An Automatic Motor Adaptation (AMA) function shall measure motor stator resistance and reactance to optimize performance and efficiency. It shall not be necessary to spin the motor shaft or de-couple the motor from the load to accomplish this optimization. Additionally, the parameters for motor resistance and motor reactance shall be user-programmable.

I. The VFD selected must be able to source the motor's full load nameplate amperage (fundamental RMS) on a continuous basis, and be capable of running the motor at its nameplate RPM, voltage, current, and slip without having to utilize the service factor of the motor.

J. The VFD shall offer a programmable motor parameter that allows the total number of poles of a motor to be programmed to optimize motor performance.

K. VFD shall automatically boost power factor at lower speeds.

L. The VFD will be capable of running either variable or constant torque loads. In variable torque applications, the VFD shall provide a CT-start feature and be able to provide full torque at any speed up to the base speed of the motor. In either CT or VT mode, the VFD shall be able to provide its full rated output current continuously and 110% of rated current for 60 seconds.

M. Switching of the input power to the VFD shall be possible without interlocks or damage to the VFD at a minimum interval of 2 minutes.

N. Switching of power on the output side between the VFD and the motor shall be possible with no limitation or damage to the VFD and shall require no additional interlocks.

O. The VFD shall have temperature-controlled cooling fans for quiet operation, minimized internal losses, and greatly increased fan life.

P. The VFD shall include an integral RFI filter conforming to the A2 standard as a minimum. VFD enclosures shall be made of metal to minimize RFI and provide additional immunity.

Q. VFD shall provide full galvanic isolation with suitable potential separation from the power sources (control, signal, and power circuitry within the drive) to ensure compliance with PELV requirements and to protect PLC's and other connected equipment from power surges and spikes.

R. All inputs and outputs shall be optically isolated. Isolation boards between the VFD and external control devices shall not be required.

S. There shall be six fully programmable digital inputs for interfacing with the systems external control and safety interlock circuitry. Two of these inputs shall be programmable as inputs or outputs.

T. The VFD shall have two analog signal inputs. Inputs shall be programmable for either 0 - 10V or 0/4-20 mA.

U. The VFD shall allow for connection, communication and control via Ethernet/IP networking, as shown in the plans.

V. Where required, the VFD shall include an I/O board that adds 3-digital inputs, 2-digital outputs, 2-analog inputs, and 1-analog output.

W. One programmable analog output shall be provided for indication of the drive status. This output shall be programmable for output speed, voltage, frequency, motor current and output power. The analog output signal shall be 0/4-20 mA.

X. The VFD shall provide two user programmable relays with 75 selectable functions. Two form 'C' 230VAC/2A rated dry contact relay outputs shall be provided.

Y. The VFD shall include a relay board that includes three additional Form 'C' 240V relays that are mounted inside the drive.

Z. Where required, the VFD shall include an integral controller, utilizing the VFD's PID loop controller feature to regulate either pressure, or flow in a system. The controller shall be compatible with systems having multiple VFD's, or with a VFD "master" and either soft starter or across-the-line follower units.

AA. The VFD shall accept input from blower devices that provide input on temperature or general alarms for shutdown.

BB. Run permissive circuit shall be provided to accept a "system ready" signal to ensure that the VFD does not start until equipment are in the proper state for VFD operation. The run permissive circuit shall also be capable of sending an output signal as a start command to actuate external equipment before allowing the VFD to start.

CC. The VFD shall be equipped with a standard RS-485 serial communications port and front-of-drive accessible USB port. Danfoss FC or ModBus RTU communications shall be integrally mounted.

DD. The VFD shall offer Ethernet/IP communication protocol.

EE. A Windows® compatible software program to display all monitoring, fault, alarm, and status signals shall be available. This software program shall allow parameter changes, storage of all VFD operating and setup parameters, and remote operation of the VFD. The software shall connect to the VFD with a standard USB cable.

2.3 HARMONICS

A. The VFD shall provide internal DC link reactors to minimize power line harmonics and to provide near unity power factor. DC Link reactor shall be installed so that power fluctuations to the DC Capacitors shall be reduced to increase Capacitor life. VFD's without a DC link reactor shall provide a 5% impedance line side reactor and provide spare capacitors.

B. The VFD shall be provided with line-side harmonic reduction, as required, to insure that the current distortion limits, as defined in table 10.3 of IEEE 519-1992, are met. PCC1, defined as the low voltage side of the distribution transformer, is used for purposes of calculation and referred, by the turns ratio of the transformer, to the PCC defined by the IEEE Recommended Practices as the Consumer-Utility interface. The tables of limits set forth therein are with reference to the PCC (primary side of the main transformer).

C. Harmonic solutions shall be designed to withstand up to 2%-line imbalances with the maximum Current Distortion not to exceed 11% at 100% load.

D. Harmonic solutions shall be capable of withstanding up to 2% ambient voltage distortion with the maximum Current Distortion not to exceed 12% at 100% load.

E. To ascertain the harmonic contribution of the VFD's at the PCC and to show compliance with IEEE 519-1992, harmonic analysis shall be performed and submitted with the bid package, provided that the VFD vendor is in receipt of the below listed information 10 working days prior to the bid date.

1. kVA rating of the low voltage distribution transformer(s)
2. X/R Ratio of utility low voltage distribution transformer(s)
3. Primary voltage
4. Secondary voltage
5. Secondary %IZ (impedance)
6. Length, size, & number of conductors between transformer LV side and distribution panel
7. System Single Line Diagram and electrical equipment list showing transformer and VFD detail
8. Total linear load kW to be connected to the distribution transformer
9. Anticipated maximum demand load (15 minute or 30 minute) on the distribution transformer (IEEE 519)

2.4 PROTECTIVE FEATURES

A. VFD shall have input surge protection utilizing MOV's, spark gaps, and Zener diodes to withstand surges of 2.3 times line voltage for 1.5 msec.

B. Printed Circuit boards shall be conformal coated to reduce the corrosion effect from environmental gases and other conditions. The conformal coating must meet IEC 61721-3-3, Class 3C2.

C. VFD shall include circuitry to detect phase imbalance and phase loss on the input side of the VFD.

D. VFD shall include current sensors to monitor all three-output phases to detect and report phase loss or unbalance or other power issues to the motor. The VFD will identify which of the output phases is low or lost.

E. VFD shall auto-derate the output voltage and frequency to the motor if an input phase is lost. This result will maintain operation without decreasing the life expectancy of the VFD. The use of this feature shall be user selectable and export a warning during the event.

F. VFD shall auto-derate the output voltage and frequency to the motor in the presence of sustained ambient temperatures higher than the normal operating range, so as not to trip on an inverter temperature fault. The use of this feature shall be user-selectable and a warning will be exported during the event. Function shall reduce switching frequency before reducing motor speed.

G. VFD shall auto-derate the output frequency by limiting the output current before allowing the VFD to trip on overload. The speed of the load can be reduced, but not stopped.

2.5 INTERFACE FEATURES

A. VFD shall provide a graphical local control panel (LCP).

B. VFD Keypad shall feature an INFO key that, when pressed, shall display the contents of the programming manual for the parameter that is currently viewed on the display. The description shall explain the feature and how the settings can be made by the operator.

C. VFD shall display all faults in plain text; VFD's which can display only fault codes are not acceptable.

D. The keypad shall feature a 6-line graphical display and be capable of digitally displaying up to five separate operational parameters or status values simultaneously (including process values with the appropriate engineering unit) in addition to Hand/Off/Auto, Local/Remote, and operating status.

E. Two lines of the display shall allow "free text programming" so that a site description or the actual name of the equipment being controlled by the VFD can be entered into the display.

F. Keypad shall provide an integral H-O-A (Hand-Off-Auto) and Local-Remote selection capability, and manual control of speed locally without the need for adding selector switches, potentiometers, or other devices.

G. All VFD's shall be of the same series, and shall utilize a common control card and LCP (keypad/display unit) throughout the rating range. The control cards and keypads shall be interchangeable through the entire range of drives used on the project.

H. VFD keypad shall be capable of storing drive parameter values in non-volatile RAM uploaded to it from the VFD, and shall be capable of downloading stored values to the VFD to facilitate programming of multiple drives in similar applications, or as a means of backing up the programmed parameters.

I. VFD Display shall have the ability to display 5 different parameters pertaining to the VFD or the load including: current, speed, DC bus voltage, output voltage, input signal in mA, or other values from a list of 92 different user-selectable parameters.

J. VFD display shall indicate which digital inputs are active and the status of each relay.

K. It shall be possible to toggle between three status read-out screens by pressing the [Status] key. Various operating variables, even with different formatting, can be shown in each status screen.

L. VFD display shall indicate the value of any voltage or current signal, including the engineering units of measurement, connected to the analog input terminals.

M. VFD display shall indicate the value of the current at the analog output terminals, including the engineering units of measurement.

N. A red FAULT light, a yellow WARNING light and a green POWER-ON light shall be provided. These indications shall be visible both on the keypad and on the VFD when the keypad is removed.

O. Two-level password protection shall be provided to prevent unauthorized changes to the programming of the VFD. The parameters can be locked via a digital input and/or the unit can be programmed not to allow an unauthorized user to change the parameter settings.

P. A quick setup menu with factory preset parameters shall be provided on the VFD to facilitate commissioning. Use of macros shall not be required.

Q. A digital elapsed time meter and kilowatt hour meter shall be provided in the display.

R. VFD shall offer as standard an internal clock. The internal clock can be used for: Timed Actions, Energy Meter, Trend Analysis, date/time stamps on alarms, Logged data, Preventive maintenance, or other uses. It shall be possible to program the clock for Daylight Saving Time / summertime, weekly working days or non-working days including 20 exceptions (holidays, etc.). It shall be possible to program a Warning in case the clock has not been reset after a power loss.

S. A battery back-up shall be provided to maintain internal clock operation during power interruptions. Battery life shall be no less than 10 years of normal operation.

T. The VFD shall store in memory the last 10 faults with time stamp and recorded data.

2.6 SOFTWARE FEATURES:

A. The VFD shall have an adjustable output switching frequency.

B. Four complete programming parameter setups shall be provided, which can be locally selected through the keypad or remotely selected via digital input(s), allowing the VFD to be programmed for up to four alternate control scenarios without requiring parameter changes.

C. In each programming set up, independent acceleration and deceleration ramps shall be provided. Acceleration and deceleration time shall be adjustable over the range from 0 to 3,600 seconds to base speed.

D. The VFD shall have four programmable “Bypass frequencies” with adjustable bandwidths to prevent the driven equipment from running at a mechanically resonant frequency. The feature shall offer a Semi-Automatic program to simplify the set-up.

E. In each programming setup, independent current limit settings, programmable between 50% and 110% of the drives output current rating, shall be provided.

F. PID parameter settings shall be adjustable while the VFD is operating, to aid in tuning the control loop at start up. The VFD will also be capable of simultaneously displaying set-point reference and feedback values with appropriate engineering units, as well as output frequency, output current, and run status while programming the PID function.

G. The VFD will include a “loss of follower” function to detect the loss of process feedback or reference signals with a live-zero value and a user-selectable choice of responses (go to set speed, min speed, max speed, stop, stop, and trip).

H. A Sleep Mode function shall be provided to reduce wear and heating of the equipment in periods where system demand is minimal. This function will operate in both open and closed loop modes:

1. In closed loop process control, when the output speed drops to a user-programmed minimum value (“sleep frequency”) for a specified time (“sleep mode timer”), the drive will enter a sleep mode and either go into standby, or boost mode before entering standby. The drive shall automatically restart the motor once the output of the PID processor exceeds a programmable value “wake up frequency”.
   a. Boost mode shall prevent short-cycling of the motor by temporarily adjusting the set-point by a user-programmable percentage. Upon reaching this value, the unit will go into standby.
2. In open loop, the drive shall be capable of entering sleep mode if the input reference drops below a user-programmable value. When the input reference increases above a user-programmable reference, the drive will automatically start.

I. An initial ramp function shall be available to provide a user-selectable ramp, up to 60 seconds, for applications requiring a faster or slower ramp than the normal ramp.

J. VFD shall offer up to 4 separate PID controllers. One controller shall operate the drive-in closed loop, while the other 3 provide control signals to other equipment. VFD’s with PI controllers only are not acceptable.

K. An Autotuning PI controller output feature shall provide automated PI controller settings. Once the user accepts the settings, the VFD will save the settings to memory.

L. Overheat detection shall be available to detect if the blower has a temp alarm. If this condition occurs, the drive will be safely stopped. A timer shall be included to prevent nuisance tripping.

M. VFD shall provide a flow compensation program to reduce energy by adjusting the Setpoint to match changes in flow (friction loss). Flow compensation shall also operate in Cascade control mode.

N. The VFD shall have a motor preheat function with the ability to be programmed to induce a small amount of current to the motor whenever it is at rest. This will prevent condensation inside the motor and help to extend its life without the need for space heaters or other external equipment.

O. The VFD will include a user-selectable Auto-Restart function that enables the VFD to power up in a running condition after a power loss, to prevent the need to manually reset and restart the VFD.

P. The VFD will include a user-selectable Reset function, which enables the selection of between zero and twenty restart attempts after any self-clearing fault condition (under-voltage, over-voltage, current limit, inverter overload, and motor overload), or the selection of an infinite number of restart attempts. The time between restart attempts shall be adjustable from 0 through 600 seconds.

Q. An automatic “on-delay” function may be selected from 0 to 120 seconds.

2.7 VFD shall catch a rotating motor operating either in forward or reverse at up to full speed.
PACKAGING OPTIONS

A. Provide a manual bypass consisting of a door interlocked main fused-disconnect padlockable in the off position, a built-in motor starter and a four position DRIVE/OFF/BYPASS/TEST switch controlling three contactors. In the DRIVE position, the motor is operated at an adjustable speed from the drive. In the OFF position, the motor and drive are disconnected. In the BYPASS position, the motor is operated at full speed from the AC power line and power is disconnected from the drive so that service can be performed. In BYPASS Position, a Danfoss MCD Softstarter will be in the circuit to allow the motor to avoid an across the line start. In the TEST position, the motor is operated at full speed from the AC line power. This allows the drive to be given an operational test while continuing to run the motor at full speed in bypass. Customer supplied normally closed dry contact shall be interlocked with the drives safety trip circuitry to stop the motor whether in DRIVE or BYPASS mode in case of an external safety fault.

2.8 SERVICE CONDITIONS

A. The ambient operating temperature of the VFD shall be -10ºC to 50ºC (14 to 122°F), with a 24-hour average not to exceed 45ºC. Storage temperatures shall be -13° F (-25° C) to149/158° F (65/70° C).

B. 0 to 95% relative humidity, non-condensing.

C. Elevation to 3,300 feet (1000 meters) without derating.

D. VFD shall provide full torque to the motor, given input voltage fluctuations of up to +10% to -15% of the rated input voltage (525 to 690VAC, 380 to 480VAC, or 200 to 240VAC). Line frequency variation of ± 2% shall be acceptable.

E. No side clearance shall be required for cooling of the units.

PART 3 - EXECUTION

3.1 SUBMITTALS

A. Submit manufacturer's performance data including dimensional drawings, power circuit diagrams, installation and maintenance manuals, warranty description, VFD's FLA rating, certification agency file numbers, catalog information and catalog cut-sheets for all major components.

B. All drawings shall be in an 8.5 X 11” reproducible format, and incorporate the manufacturer’s title block on the drawing.

C. This specification lists the minimum VFD performance requirements for this project. Each supplier shall list any exceptions to the specification. If no departures from the specification are identified, the supplier shall be bound by the specification.

D. Three copies of all submittals shall be provided.

E. Submit a computer-generated Harmonic Distortion Analysis for the jobsite location.

3.2 QUALITY ASSURANCE

A. The manufacturer shall be both ISO-9001 and ISO-14001 certified.

B. All products shall be CE marked; UL labeled, and meet the requirements of UL-508C and maintain cUL.

C. To ensure quality and minimize infant-mortality failures on the jobsite, each VFD shall be completely tested by the manufacturer. The VFD shall operate a dynamometer at full load and speed under elevated temperature conditions.

D. All optional features shall be functionally tested at the factory for proper operation.

E. Factory test documentation shall be available upon request.

3.3 EXAMINATION

A. Contractor to verify that job site conditions for installation meet factory recommended and code-required conditions for VFD installation prior to start-up, including clearance spacing, temperature, contamination, dust, and moisture of the environment. Separate conduit installation of the motor wiring, power wiring, and control wiring, and installation per the manufacturer's recommendations shall be verified.

B. The VFD is to be covered and protected from installation dust and contamination until the environment is cleaned and ready for operation. The VFD shall not be operated while the unit is covered.

3.4 START-UP AND WARRANTY

A. A factory-authorized service technician shall perform start-up on each drive. ("Start up" shall not include installation or termination of either power or control wiring.) The service technician shall perform start-up on up to 8 drives per day. Start-up costs provided with the bid shall include time and travel for the estimated number of visits required, but shall not be less than at least one half-day with travel. Additional labor or return trips to the site shall be billed at Danfoss' published straight-time rates. Upon completion, a startup service report shall be provided.

B. A 6-year on-site warranty shall be provided such that the owner is not responsible for any warranty costs including travel, labor, parts, or other costs for a full 6 years from the date of manufacture of the Drive. The warranty shall cover all Drive failures including line anomalies – including lightning strikes, load anomalies, accidental exposure to moisture or corrosives and accidental collision of other physical damage; product misapplications, vandalism and chronic problems due to the misapplication are not covered. The cost of the warranty shall be included in the bid.

END OF SECTION

SECTION 16500 – LIGHTING

PART 1 – GENERAL

1.1 SCOPE OF WORK

A. The CONTRACTOR shall provide all labor, materials, equipment and incidentals as shown, specified and required to furnish and install lighting fixtures.

1.2 QUALITY ASSURANCE

A. Reference Standards:
   1. National Electrical Code (NEC)
   2. UL Standard #57, Electric Lighting Fixtures
   3. UL Standard #844, Electric Lighting Fixtures for Use in Hazardous Location
   4. UL Standard #1570, Fluorescent Lighting Fixtures
   5. UL Standard #1571, Incandescent Lighting Fixtures
   6. UL Standard #1572, High Intensity Discharge Lighting Fixtures
   7. Illuminating Engineering Society (IES)
   8. All applicable local lighting ordinances

B. Miscellaneous:
   1. Lamps are identified for each luminaire in the Lighting Fixture Schedule on the Plans.
   2. Lighting fixtures and electrical components:
      a. UL labeled, complete with lamps.
      b. Rated for area classification as indicated.
   3. Location of lighting fixtures on Plans are intended to be used as a guide.
      a. Field conditions may affect actual locations.
      b. Coordinate with other trades to avoid conflicts in mounting of fixtures and other equipment.
   4. The quality standard is established by the fixture listed in the Lighting Fixture Schedule.
      a. This quality standard includes, but is not necessarily limited to construction features, materials of construction, finish, and photometrics.

1.3 SUBMITTALS

A. The following shall be submitted to the ENGINEER for review:
   1. Acknowledgment that products submitted meet requirements of standards referenced.
   2. Manufacturer's technical information on products to be used including photometric performance curves for the fixture and ballast data.
   3. Acknowledgment that products submitted are UL or ETL listed.
   4. When general data sheets constitute part of the submittal, identify the products to be used on this project.
   5. Manufacturer's installation instructions.
   6. Identification of fixtures by Lighting Fixture Schedule.
   7. UL nameplate data (Voltage, wattage, etc.).
   8. Finishes, colors, and mounting type.
   9. Pole, fixture, and accessories.
   10. Pole wind loading.

B. CONTRACTOR shall submit shop drawings, manufacturer's data sheets, and a complete wiring diagram detailing all connections to the electrical system in accordance with Section 16000, and other requirements of the Contract Documents.

PART 2 – PRODUCTS

2.1 MANUFACTURERS

A. Lamps shall be manufactured by General Electric, North American/Phillips, Sylvania, or equal.

B. Lighting fixtures shall be provided as indicated on the Lighting Fixture Schedule on the Plans.

C. Lighting ballasts shall be manufactured by General Electric, Advance, Jefferson, Universal, Bodine, Lithonia, or equal.

D. Light poles shall be as indicated on the Plans. Include base template, anchor bolts, cadmium-plated hardware and pole grounding lug, handhole, anchor base and bolt covers. Pole foundations shall be as indicated on the Plans.

2.2 MATERIALS

A. General:
   1. Lamps:
      a. See lighting fixtures specified on Electrical Plans for wattage, voltage and number required.
   2. All Fixtures:
      a. There shall be no live parts normally exposed to contact.
      b. When intended for use in wet area, mark fixtures "suitable for wet locations."
      c. When intended for use in damp areas, mark fixtures:
         "suitable for damp locations" or "suitable for wet locations."
      d. In wet or damp area, install fixtures so that water cannot enter or accumulate in the wiring compartment, lampholder, or other electrical parts.
      e. Gasket seals: Urethane foam
      f. Diffusers: UV stabilized acrylic plastic
   3. Underground wiring:
      a. Provide all wiring runs with separate green grounding conductor.
      b. Ground all pole bases.
   4. Pole wiring from base to ballast:
      a. No. 12 type XHHW.
      b. Each phase shall be protected by a 30A, 600V, type Tron waterproof fuseholder, Bussman "Limitron" type fuse, size rating 3-times load current.

B. Compact Fluorescent and Fluorescent Lamps:
   1. Rapid start
   2. Cool white (F32T8141 K-85CRI and F96T12I41 K-70CRIIHO/ES)

C. LED Lamps:
   1. Bulb finish: Clear
   2. Any burning position

D. Furnish a minimum of 2 lamps, or ten percent spare lamps of each type and wattage, whichever is greater.

2.3 FIXTURES

A. Compact Fluorescent, Fluorescent and LED Lighting Fixtures:
   1. Ballast:
      a. Rapid start, high power factor type
      b. CBM/ETL certified
      c. Sound rating A
      d. Two internal automatic-resetting thermal switch devices for coil and capacitor

2. Internal wiring: AWM, TFN or THHN
3. Channel and end plates: 22 GA steel
4. Steel door frame and socket track: 20 GA steel
5. Channel cover: 24 GA steel
6. Emergency ballast:
   a. Integral rechargeable nickel-cadmium battery, battery charger, and automatic transfer circuitry.
   b. Charging indicator light.
   c. Test Switch.
   d. Provide a minimum of 900 lumen output for 90 minutes upon loss of normal power.
   e. Mounted integral to the fixture.
   f. UL 924 listed.
7. Provide fixtures with emergency ballasts with permanent caution labels warning that the fixture is fed from an unswitched source.
   a. Provide emergency ballast also with a similar caution label.

B. HID Lighting Fixtures:
1. Ballasts for high pressure sodium lighting fixtures:
   a. Type: Regulating
   b. Ballast design center variance: Maximum 5 percent from rated lamp wattage.
   c. Lamp wattage regulation spread at the lamp voltage: Maximum 10 percent for +/-10 percent line voltage variation.
   d. Ballast primary current during starting not to exceed normal operating current.
   e. Lamp current crest factor: Maximum 1.8 for +/-10 percent line voltage variation at any lamp voltage, from nominal through life.
   f. Power factor shall not drop below 90 percent for +/-10 percent line voltage variations at any lamp voltage, from nominal through life.
   g. Capacitor variance: Tolerance of +/-6 percent which will not cause more than a +/-8 percent variation in regulation throughout rated lamp life for nominal line voltage.
   h. Capable of operation with an open circuit condition for a maximum of 6 months without significant loss of ballast or starting circuitry life.
2. Ballasts for metal halidelmercury vapor lighting fixtures:
   a. Type: Auto-regulator
   b. Voltage input range: +/-10 percent
   c. Lamp regulation spread: 20 percent maximum
   d. Power factor: 90 to 95 percent
   e. Input voltage dip (4sec.): 40 to 50 percent
   f. Crest factor of lamp current: 1.6 to 2.0
3. Ballasts for exterior HID lamps:
   a. UL approved
   b. High power factor designed for -20 Deg F temperature starting
4. Fixtures for non-hazardous locations:
   a. Type: Industrial low bay
   b. Ballast housing: Die-cast
   c. Filter: Activated charcoal
   d. Refractor: UV stabilized molded acrylic

2.4 MISCELLANEOUS ELECTRIC DEVICES

A. Photoelectric Control Units shall meet the following requirements:
1. Cadmium sulfide photocell

2. Aluminum weatherproof enclosure
3. 30 amp rated contacts
4. 120-volt AC power
5. The Photoelectric control unit shall be Tork Model 2100, or equal.

B. Motion Sensors shall meet the following requirements:
1. 110 degrees field of view, 60-foot range
2. Adjustable time setting from 15 seconds to 15 minutes
3. Operating temperature of -20 to + 130 degrees F.
4. Complete outdoor, weather proof sensor with complete mounting hardware
5. UL listed
6. The motion sensor(s) shall be manufactured by Leviton Model 50500-H or equal.

PART 3 – EXECUTION

3.1 INSTALLATION

A. Install lamps in all luminaires.

B. Replace all failed fluorescent, incandescent, metal halide, mercury vapor and high-pressure sodium lamps with new lamps prior to final acceptance by OWNER.

C. Surface and flush mounted fixtures shall be solidly connected to a junction box. Suspended fixtures shall be hung utilizing pendant mounting or stainless-steel chains and hooks. Each suspended fixtures, shall be electrically connected by a length of Type SO flexible cord. 3 conductor No. 14 AWG, minimum, with a twist-lock receptacle mounted in an individual junction box. Plugs and receptacles shall be as manufactured by Hubbell, General Electric Company, or equal.

D. Provide mounting brackets and/or structural mounting support for fixtures. Do not support fixture from conduit system. 2. Do not support fixture from outlet boxes.

E. Install with approved mounting hardware following manufacturer's recommendations.

F. Pole mounted fixtures shall be mounted on steel or aluminum poles as indicated on the Plans. All metal poles shall be bonded to the facility ground system. Poles shall have adequate handholes and weatherproof receptacles where indicated.

G. All anchor bolts and nuts shall be stainless steel. CONTRACTOR shall paint all steel poles with aluminum paint or other color in accordance with these Contract. Documents.

H. Fixture mounting heights and locations indicated on the Plans are approximate and are subject to revision in the field where necessary to avoid conflicts and obstructions.

3.2 ADJUSTING AND CLEANING

A. Wipe all lighting fixture reflectors, lenses, lamps, and trims clean after installation and prior to acceptance of Project by OWNER.

END OF SECTION

SECTION 16902 – ELECTRICAL CONTROLS, RELAYS AND ALARMS

PART 1 – GENERAL

1.1 SCOPE OF WORK

A. This Section includes the following:
   1. Pushbutton and Selector Switches
   2. Relays
   3. Alarms
   4. Intrinsic Safety Barriers
   5. Wireways
   6. Watthour Transducers
   7. Elapsed Time Meters and Time Clocks

1.2 REFERENCES

A. NEMA ICS 1: General Standards for Industrial Control Systems.

B. NEMA ICS 2: Standards for Industrial Control Devices, Controllers and Assemblies.

C. NEMA ICS 6: Enclosures for Industrial Controls and Systems.

D. NEMA ST 1: Standard for Specialty Transformers (Except General purpose Type).

1.3 SUBMITTALS

A. Data: a complete list of equipment and material including manufacturer's descriptive data and technical literature, performance charts, catalog cuts and installation instructions, spare parts data for each different item of equipment specified. The data shall include a complete Bill of Materials.

B. Drawings: containing complete wiring and schematic diagrams, control diagrams, and any other details required to demonstrate that the system has been coordinated and will properly function as a unit. Drawings shall show proposed layout, anchorage, support and appurtenances of equipment and equipment relationship to other parts of the work including clearances for maintenance and operations.

C. Submit shop drawings in accordance with the Contract Documents, and NEMA ICS 1 specifications indicating control panel layouts, wiring connections and diagrams, dimensions, support points.

1.4 PROJECT RECORD DOCUMENTS

A. Submit record documents in accordance with the Contract Documents.

B. Accurately record actual locations of control equipment. Revise diagrams included in Drawings to reflect actual control device connections.

1.5 OPERATION AND MAINTENANCE DATA

A. Submit operation data in accordance with the Contract Documents.

B. Include instructions for adjusting and resetting time delay relays, timers, and counters.

C. Submit maintenance data in accordance with the Contract Documents.

D. Include recommended preventative maintenance procedures and materials.

PART 2 – PRODUCTS

2.1 PUSHBUTTONS AND SELECTOR SWITCHES

A. Pushbuttons, pilot lights and selector switches shall be of the full size, heavy-duty

industrial, oil tight, 120 Volts, with interchangeable pilot lights, plug-in construction, double break silver contacts, chrome plated lock rings, with modular contacts, and NEMA rating equal to that of the enclosure on which devices are installed. All components shall be flush mounted on front of panel, unless otherwise noted.

B. Provide individual legend plates for indication of switch, pushbutton, and light function (e.g., Open, Closed, Hand-Off-Auto). A list shall be submitted for review and approval

C. Pilot lights shall be high intensity LED type. Pilot lights shall have clear lenses and LED lamps colored as shown on the Plans. Common, remote push-to-test circuitry shall be provided for each control panel to simultaneously test all indicating lights on the panel using a single pushbutton when there are 10 or more lights on the panel. Control panels with less than 10 lights shall utilize individual push-to-test lights and control circuitry.

D. Pushbuttons shall be maintained or momentary as required and as shown on the Drawings. Provide extended head pushbutton for all stop functions, mushroom head for emergency stop functions, and flush head pushbuttons for all other functions. Where indicated on the Drawings pushbuttons shall be illuminated type. Provide locking mechanism for all lock out functions. Selector switches shall have black knob operator, be maintained contact type unless noted otherwise, number and arrangement as required to perform intended functions specified but not less than one double pole, double throw, double break contact per switch. Contact rating shall be compatible with AC or DC throughput current of devices simultaneously operated by the switch contact but not less than 10 Amperes resistive at 120 Volts AC or DC continuous.

E. Potentiometers shall be provided with operators and resistive elements of the type and quantity indicated on the Drawings and as required with legend plates indicating percent of span.

F. The above devices shall be manufactured by Allen Bradley, General Electric, or equal.

2.2 RELAYS

A. Timing relays shall be heavy duty, 300V A.C., 10 amps, solid state design, poles as required per application, -10 degrees C to +60 degrees C, have timing repeatability of ±2.0% of setting, and be UL listed. The range shall be determined from the control descriptions and or schematic drawings. Provide mounting accessories, as required. The timing relays shall be manufactured by Allen Bradley, Cutler Hammer, or equal.

B. Control relays shall be of the plug-in socket base type with dust-proof plastic enclosures, with silver-cadmium oxide contacts rated 300-volt, 10 amperes, with contact arrangement and operating coils of the proper voltage as required by the control circuit sequence. Relays shall have indicating lamp to show energized state. Each relay shall have a minimum of two double pole, double throw contacts, or as required. Control relays shall be Allen Bradley, Cutler Hammer, or equal.

C. Alternating relays shall be UL listed, 120 VAC, with contacts rated for 10 amperes at 120 VAC, life expectancy of 100,000 operations, load indicating LEDs, and switch for load locking and load selecting options. Alternating relays shall be manufactured by TimeMark models 261, 271, and 471, and Diversified Electronics model ARA for duplex, triplex, and quadplex alternators.

2.3 ALARMS

A. Audible alarms shall be UL listed, 120 VAC, with solid state circuitry, vibrating horn, non-metallic corrosion resistant housing, with required mounting hardware, suitable for outdoor use capable of producing 100 dB at 10 feet. The audible alarm shall be manufactured by Federal Signal model 350, Edwards model 870--EX, or equal.

B. Rotating beacons for interior and/or exterior locations shall be UL listed, 120 VAC, with motor and cooling fan, rotating lights at 60 times per minute minimum, capable of

producing 36000 candlepower with required mounting hardware. Lens color shall be verified at the time of construction. The rotating beacons shall be manufactured by Federal Signal model 371 L or equal.

C. Rotating beacons for corrosive and/or hazardous locations shall be UL listed, 120 VAC, with solid state circuitry, rotating lights at 60 times per minute minimum, suitable for outdoor use capable of producing 36000 candlepower with required mounting hardware. Lens color shall be verified at the time of construction. The rotating beacons shall be manufactured by Edwards model 52EX or equal.

D. Strobe beacons shall be UL listed, NEMA 4X, 120 VAC, flashing at 80 times per minute minimum, producing peak candlepower of 520,000, effective candlepower of 165, with required mounting hardware. Lens color shall be verified at the time of construction. The rotating beacons shall be manufactured by Federal Signal model 151 XST, Edwards model 92EX, or equal.

2.4 INTRINSIC SAFETY BARRIERS

A. Intrinsic safety barriers shall permit connection of devices located in a hazardous area to other devices located in a safe area. Intrinsic safety barriers shall be EMC compliant, 10 to 35 V dc, 35 mA output current, hazardous area terminals identified by blue labels, terminals accommodating conductors up to 12 AWG, ambient temperature rating of -20 to +60°C. The intrinsic safety barriers shall be manufactured by MTL Inc., Ronan Engineering Co., R. Stahl Inc., or equal.

2.5 WIREWAYS

A. Wireways shall be PVC, snap-in slot design, with non-slip cover. Safe area wireways shall be light gray and marked "Safe Area Wiring." Hazardous area wireways shall be intrinsic blue and marked "Hazardous Area Wiring." The wireways shall be manufactured by Panduit Corporation, or equal.

2.6 WATTHOUR TRANSDUCERS

A. Watthour transducers for active or reactive power shall be DIN rail and surface mount, single phase or three phase with balanced or unbalanced load, electrically isolated input and output signals, 4 to 20 mA output signal, 0-10 mA to 0-10 A input current, 0-10 V to 0-600 VAC input voltage, 16-500 Hz selectable frequency. The watthour transducers shall be manufactured by Sineax model PQ502, or equal.

2.7 ELAPSED TIME METERS AND TIME CLOCKS

A. Elapsed time meters shall be self powered, non-reset, solid state counter which provides silent, accurate and noise immune operation. Elapsed time meters shall require no external power, five-year minimum battery life, 120 VAC power, accessories for panel mounting, nameplate below LCD display reading "HOURS", liquid crystal display with 6 digits approximately 2 inches high with 50,000-hour minimum display life and indication of sufficient battery power. The elapsed time meters shall be manufactured by Durant, Automatic Timing and Controls a Division of Sycon Corp., or equal.

B. Time clocks shall be microprocessor based, have 24-hour time control, up to 24 operations per day, programmable from panel face keys, skip-a-day feature allowing schedule to be skipped for one to seven days, SPDT switch contact rated at 15 amps at 120 V AC, with battery carryover to maintain time and program during power outage for 275 hours. The time clocks shall be manufactured by Tork, Paragon Electric Company, or equal.

PART 3 – EXECUTION

3.1 INSTALLATION

A. Fasteners shall be type 304 stainless steel.

B. Install devices in strict accordance with NEC requirements and per the manufacturer's recommendations.

C. Coordinate with other trades as necessary during installation of these devices.

3.2 ACCEPTANCE

A. All installations are subject to evaluation in accordance with NEC requirements and the manufacturer's recommendations. CONTRACTOR shall remove the unacceptable work and correct work at no charge to OWNER.

END OF SECTION

SECTION 16950 – ELECTRICAL TESTING

PART 1 – GENERAL

1.1 SCOPE OF WORK

A. The CONTRACTOR shall provide testing as specified herein.

1.2 REFERENCES

A. The following is a list of standards which may be referenced in this section:
   1. American National Standards Institute (ANSI):
      a. 450, Recommended Practice for Maintenance, Testing, and Replacement of Large lead Storage Batteries for Generator Stations and Substations.
      b. C2, National Electric Safety Code.
      c. C37.20.1, Metal-Enclosed Low Voltage Power Circuit Breaker Switchgear.
      d. C37.20.2, Metal-Clad and Station-Type Cubicle Switchgear.
      e. C37.20.3, Metal-Enclosed Interrupter Switchgear.
      f. C62.33, Standard Test Specifications for Varistor Surge Protective Devices.
   2. American Society for Testing and Materials (ASTM):
      a. D665, Standard Test Method for Rust Preventing Characteristics of Inhibited Mineral Oil in the Presence of Water.
      b. D877, Standard Test Method for Dielectric Breakdown Voltage of Insulating Liquids Using Disk Electrodes.
      c. D923, Standard Test Method for Sampling Electrical Insulating Liquids.
      d. D924, Standard Test Methods for A-Class Characteristics and Relative Permittivity (Dielectric Constant) of Electrical Insulating Liquids.
      e. D971, Standard Test Method for Interfacial Tension of 0.1 Against Water by the Ring Method.
      f. D974, Standard Test Method for Acid and Base Number by Color-indicator Titration.
      g. D1298, Standard Test Method for Density, Relative Density (Specific Gravity), or API Gravity of Crude Petroleum and Liquid Petroleum Products by Hydrometer Method.
      h. D1500, Standard Test Method for ASTM Color of Petroleum Products.
      i. D1524, Standard Test Method for Visual Examination of Used Electrical Insulating Oils of Petroleum Origin in the Field.
      j. D1533, Standard Test Methods for Water in Insulating Liquids.
      k. D1816, Standard Test Method for Dielectric Breakdown Voltage on Insulating Oils of Petroleum Origin Using VDE Electrodes.
      l. D2285, Standard Test Method for Interfacial Tension of Electrical Insulating Oils of Petroleum Origin Against Water by the Drop-Weight Method.
   3. Institute of Electrical and Electronics Engineers (IEEE):
      a. 43, Recommended Practice for Testing Insulating Resistance of Rotating Machinery.
      b. 48, Standard Test Procedures and Requirements for High-Voltage Alternating-Current Cable Terminators.
      c. 81, Guide for Measuring Earth Resistivity, Ground Impedance, and Earth Surface Potentials of a Ground System.
      d. 95, Recommended Practice for Insulation Testing of Large AC Rotating Machinery with High Direct Voltage.
      e. 118, Standard Test Code for Resistance Measurement.
      f. 400, Guide for Making High-Direct-Voltage Tests on Power Cable Systems in the Field.

4. National Electrical Manufacturers Association (NEMA):
   a. AB 4, Guideline for Inspection and Preventive Maintenance of Molded Case Circuit Breakers Used in Commercial and Industrial Applications.
   b. PB 2, Deadfront Distribution Switchboards.
   c. WC 7, Cross-Linked-Thermosetting-Polyethylene-Insulated Wire and Cable for the Transmission and Distribution of Electrical Energy.
   d. WC 8, Ethylene-Propylene-Rubber-insulated Wire and Cable for the Transmission and Distribution of Electrical Energy.
5. International Electrical Testing Association (NETA) 1999: Acceptance Testing Specifications (ATS) for Electrical Power Distribution Equipment and Systems.
6. National Fire Protection Association (NFPA):
   a. 70, National Electrical Code (NEC).
   b. 70E, Standard for Electrical Safety Requirements for Employee Workplaces.

1.3 SUBMITTALS

A. Administrative Submittals: Submit 30 days prior to performing inspections or tests:
   1. Schedule for performing inspection and tests
      a. Include notification dates for special inspections.
   2. List of references to be used for each test.
   3. Sample copy of equipment and materials inspection form(s).
   4. Sample copy of individual device test form.
   5. Sample copy of individual system test form.

B. Quality Control Submittals: Submit within 14 days after completion of test:
   1. Test or inspection reports and certificates for each electrical item tested.

C. Contract Closeout Submittals:
   1. In accordance with Operation & Maintenance requirements specified elsewhere.
   2. After test of inspection reports and certificates have been reviewed by ENGINEER and returned, insert a copy of each in operation and maintenance manual.

1.4 QUALITY ASSURANCE

A. Testing Firm Qualifications:
   1. Independent V party organization functioning as an unbiased testing authority.
   2. Professionally independent of manufacturers, suppliers, and installers, of electrical equipment and systems being tested.
   3. Employer of engineers and technicians regularly engaged in testing and inspecting of electrical equipment, installations, and systems.
   4. Supervising engineer accredited as Certified Electrical Test Technologist by National Institute for Certification of Engineering Technologists (NICET), or International Electrical Testing Association and having a minimum of 5 years testing experience on similar projects.
   5. Technicians certified by NICET or NETA.
   6. Assistants and apprentices assigned to project at ratio not to exceed two certified to one non-certified assistant or apprentice.
   7. Registered Professional Engineer to provide comprehensive project report outlining services performed, results of such services, recommendations, actions taken, and opinions.
   8. In compliance with OSHA Title 29, Part 1907 criteria for accreditation of testing laboratories.

B. Test equipment shall have an operating accuracy equal to, or greater than, requirements established by NETA ATS. Test instrument calibration shall be in accordance with NETA ATS.

1.5 SEQUENCING AND SCHEDULING

A. Perform inspection and electrical tests after equipment has been installed and certified by equipment manufacturer's representative.

B. Perform tests with apparatus de-energized whenever feasible.

C. Inspection and electrical tests on energized equipment are to be:
   1. Scheduled with OWNER and ENGINEER prior to de-energization.
   2. Minimized to avoid extended period of interruption to the operating equipment.

D. Notify OWNER and ENGINEER at least 72 hours prior to performing tests on energized electrical equipment.

PART 2 – PRODUCTS (NOT USED)

PART 3 – EXECUTION

3.1 GENERAL

A. Tests specified in this section are to be performed in accordance with the requirements of manufacturer's minimum recommendations, as identified herein, and as detailed in specific equipment specifications.

B. Tests and inspection shall establish that:
   1. Electrical equipment is operational within industry and manufacturer's tolerances.
   2. Installation operates as designed and intended by the equipment manufacturer.
   3. Equipment is suitable for energization.
   4. Installation conforms to requirements of Contract Documents and NFPA 70, NFPA 70E, and ANSI C2.

C. Perform inspection and testing in accordance with NETA ATS, industry standards, and manufacturer's recommendations.

D. Adjust mechanisms and moving parts for free mechanical movement.

E. Adjust adjustable relays and sensors to correspond to operating conditions, or as recommended by manufacturer.

F. Verify nameplate data for conformance to Contract Documents.

G. Realign and shim equipment not properly aligned and correct out of alignment, plump, or level condition.

H. Properly anchor electrical equipment found to be inadequately anchored.

I. Tighten accessible bolted connections, including wiring connections, with calibrated torque wrench to manufacturer's recommendations, or as otherwise specified.

J. Clean contaminated surfaces with cleaning solvents as recommended by manufacturer.

K. Provide proper lubrication of applicable moving parts.

L. Inform OWNER of working clearances not in accordance with NFPA 70.

M. Investigate and repair or replace:
   1. Electrical items that fail tests.
   2. Active components not operating in accordance with manufacturer's instructions.
   3. Damaged electrical equipment.

3.2 ELECTRICAL ENCLOSURES:

A. Remove foreign material and moisture from enclosure interior.

B. Vacuum and wipe clean enclosure interior.

C. Remove corrosion found on metal surfaces.

D. Repair or replace, as determined by OWNER, door and panel sections having dented surfaces.

E. Repair or replace, as determined by OWNER, poor fitting doors and panel sections.

F. Repair or replace improperly operating latching, locking, or interlocking devices.

G. Replace missing or damaged hardware.

H. Finish:
   1. Provide matching paint and touch up scratches and marks.
   2. If required due to extensive damage, as determined by OWNER, refinish the entire assembly.

I. Replace fuses and circuit breakers that do not conform to size and type required by the Contract Documents.

J. Grout, caulk, or seal around the base of enclosures to prevent the entrance of moisture, dust, and rodents.

3.3 DRY TYPE TRANSFORMERS

A. Visual and Mechanical inspection:
   1. Physical and insulator damage.
   2. Proper winding connections.
   3. Bolt torque level in accordance with NETA ATS, Table 10.12, unless otherwise specified by manufacturer.
   4. Defective wiring.
   5. Removal of shipping brackets, fixtures, or bracing.
   6. Free and properly installed resilient mounts.
   7. Cleanliness and improper blockage of ventilation passages.
   8. Verify that tap-changer is set at correct ratio for rated output voltage under normal operating conditions.
   9. Verify proper secondary voltage phase-to-phase and phase-to-ground after energization and prior to loading.

B. Electrical Tests:
   1. Insulation Resistance Tests:
      a. Applied megohmmeter do voltage in accordance with NETA ATS, Table 10.5 for each:
         1) Winding-to-winding.
         2) Winding-to-ground.
      b. 10-minute test duration with resistances tabulated at 30 seconds, 1 minute, and 10 minutes.
      c. Results temperature corrected in accordance with NETA ATS, Table 10.14.
      d. Temperature corrected insulation resistance values equal to, or greater than, ohmic values established by manufacturer.
      e. Insulation resistance test results to compare within 1 percent of adjacent windings.
   2. Perform tests and adjustments for fans, controls, and alarm functions as suggested by manufacturer.

3.4 LOW VOLTAGE CABLES, 600 VOLTS MAXIMUM

A. Visual and Mechanical Inspection
   1. Inspect each individual exposed power cable No. 4 and larger for:
      a. Physical damage.
      b. Proper connections in accordance with Single-Line Diagram.

c. Cable bends not in conformance with manufacturer's minimum allowable bending radius where applicable.
d. Color coding conformance with NFPA 70 or specifications.
e. Proper circuit identification.

2. Mechanical Connections For
   a. Proper lug type for conductor material.
   b. Proper lug installation.
   c. Bolt torque level in accordance with NETA ATS, Table 10. 12, unless otherwise specified by manufacturer.
3. Shielded Instrumentation Cables (IC) for
   a. Proper shield grounding.
   b. Proper terminations.
   c. Proper circuit identification.
4. Control Cables For:
   a. Proper termination.
   b. Proper circuit identification.
5. Cables Terminated Through Window Type CTs: Verify that neutrals and grounds are terminated for correct operation of protective devices.

B. Electrical Tests:
1. Insulation Resistance Tests:
   a. Applied megohmmeter do voltage in accordance with NETA ATS, Table 10.1.
   b. Phase-to-phase and phase-to-ground for 1 minute on each pole.
   c. Insulation resistance values equal to, or greater than ohmic values established by manufacturer or listed in NETA ATS, Table 10.1.
2. Contact Resistance Tests:
   a. Contact resistance in microhms across each switch blade and fuse holder, 30 amps and larger.
   b. Investigate deviation of 50 percent or more from adjacent poles or similar switches.

3.5 MOLDED CASE CIRCUIT BREAKERS

A. General: Inspection and testing limited to circuit breakers rated 200 amperes and larger.

B. Visual and Mechanical Inspection:
1. Proper mounting.
2. Proper conductor size.
3. Feeder designation according to nameplate and one-line diagram.
4. Cracked casings.
5. Connection bolt torque level in accordance with NETA ATS, Table 10.1.
6. Operate frame size and trip setting with circuit breaker schedules or one-line diagram.
7. Compare frame size and trip setting with circuit breaker schedules or one-line diagram.
8. Verify that terminals are suitable for 75 degrees C rated insulated conductors.

C. Electrical Tests:
1. Insulation Resistance Tests:
   a. Utilize 1,000-volt do megohmmeter for 480 and 600-volt circuit breakers.
   b. Pole-to-pole and pole-to-ground with breaker contacts opened for 1 minute.
   c. Pole-to-pole and pole-to-ground with breaker contacts closed for 1 minute.
   d. Test valves to comply with NETA ATS, Table 10.2.
2. Contact Resistance Tests:
   a. Contact resistance in microhms across each pole.
   b. Investigate deviation of 50 percent or more from adjacent poles and similar breakers.

3. Primary Current Injection Test to Verify:
    a. Long-time minimum pickup and delay.
    b. Short-time pickup and delay.
    c. Ground fault pickup and delay.
    d. Instantaneous pickup by run-up or pulse method.
    e. Trip characteristics of adjustable trip breakers shall be within manufacturer's published time-current characteristic tolerance band, including adjustment factors.
    f. Trip times shall be within limits established by NEMA AB 4, Table 5-3.
    g. Instantaneous pickup value shall be within values established by NEMA AB 4, Table 5-4.

3.6 INSTRUMENT TRANSFORMERS

A. Visual and Mechanical Inspection:
1. Visually Check Current, Potential, and Control Transformers For:
    a. Cracked insulation.
    b. Broken leads or defective wiring.
    c. Proper connections
    d. Adequate clearances between primary and secondary circuit wiring.
2. Verify Mechanically That:
    a. Grounding and shorting connections have good contact.
    b. Withdrawal mechanism and grounding operation, when applicable, operate properly.
3. Insulation resistance measurement on instrument transformer shall not be less than that shown in NETA ATS, Table 7.1.1.

3.7 METERING

A. Visual and Mechanical Inspection:
1. Verify meter connections in accordance with appropriate diagrams.
2. Verify meter multipliers.
3. Verify that meter types and scales conform to Contract Documents.
4. Check calibration of meters at cardinal points.
5. Check calibration of electrical transducers.

3.8 GROUNDING SYSTEMS

A. Visual and Mechanical Inspection:
1. Equipment and circuit grounds in motor control centers and panelboards assemblies for proper connection and tightness.
2. Ground bus connections in motor control centers and panelboards assemblies for proper termination and tightness.
3. Effective transformer core and equipment grounding.
4. Accessible connections to grounding electrodes for proper fit and tightness.
5. Accessible exothermic-weld grounding connections to verify that molds were fully filled and proper bonding was obtained.

3.9 AC INDUCTION MOTORS

A. General: Inspection and testing limited to motors rated 10 hp and larger.

B. Visual and Mechanical Inspection:
1. Proper electrical and grounding connections.
2. Shaft alignment.
3. Blockage of ventilating air passageways.
4. Operate Motor and Check for:
    a. Excessive mechanical and electrical noise.

b. Overheating.
c. Correct rotation.
d. Check vibration detectors, resistance temperature detectors, or motor inherent protectors for functionality and proper operation.
e. Excessive vibration.

5. Check operation of space heaters.

C. Electrical Tests:

1. Insulation Resistance Tests:
   a. In accordance with ANSWEEE 43:
      1) Motors above 200 hp for 10-minute duration with resistances
      2) tabulated at 30 seconds, 1 minute, and 10 minutes.
      3) Motors 200 hp and less for 1-minute duration with resistances tabulated at 30 and 60 seconds.
2. Insulation resistance values equal to, or greater than, ohmic values established by manufacturers.
3. Calculate polarization index ratios for motors above 200 hp. Investigate index ratios less than 1.5 for Class A insulation and 2.0 for Class B insulation.
4. Insulation resistance test on insulated bearings in accordance with manufacturer's instructions.
5. Measure running current and voltage, and evaluate relative to load conditions and nameplate full-load amperes.
6. Verify proper operation of motor moisture and winding temperature protection, and other ancillary devices.

3.10 MOTOR CONTROL CENTERS AND MOTOR CONTROLLERS

A. Visual and Mechanical Inspection:

1. Proper barrier and shutter installation and operation.
2. Proper operation of indicating and monitoring devices.
3. Proper overload protection for each motor.
4. Improper blockage of air-cooling passages.
5. Proper operation of drawout elements.
6. Integrity and contamination of insulation system.
7. Check door and device interlocking system by:
   a. Closure attempt of device when door is in OFF or OPEN position.
   b. Opening attempt of door when device is in ON or CLOSED position.
8. Check nameplates for proper identification of:
   a. Equipment title and tag number with latest Single-Line Diagram.
   b. Pushbuttons.
   c. Control switches.
   d. Pilot lights.
   e. Control relays.
   f. Circuit breakers.
   g. Indicating meters.
9. Verify that fuse and circuit breaker sizes and types conform to Contract Documents.
10. Verify that current and potential transformer ratios conform to Contract Documents.
11. Check bus connections for high resistance by low resistance ohmmeter and calibrated torque wrench applied to bolted joints:
    a. Ohmic value to be zero.
    b. Bolt torque level in accordance with NETA ATS, Table 10. 12, unless otherwise specified by manufacturer.
12. Check operation and sequencing of electrical and mechanical interlock systems by:

a. Closure attempt for locked open devices.
b. Opening attempt for locked closed devices.

13. Verify performance of each control device and feature famished as part of the motor control center or motor controller.
14. Control Wiring:
    a. Compare wiring to local and remote control, and protective devices with elementary diagrams.
    b. Check for proper conductor lacing and bundling.
    c. Check for proper conductor identification.
    d. Check for proper conductor lugs and connections.
15. Exercise active components.
16. Inspect contactors for:
    a. Correct mechanical operations.
    b. Correct contact gap, wipe, alignment, and pressure.
    c. Correct torque of all connections.
17. Compare overload rating with full-load current for proper size.
18. Compare fuse, motor protector, and circuit breaker with motor characteristics for proper size.
19. Perform phasing check on double-ended motor control centers to ensure proper bus phasing from each source.

B. Electrical Tests:
1. Insulation Resistance Tests:
    a. Applied megohmmeter DC voltage in accordance with NETA ATS, Table 10.1.
    b. Bus section phase-to-phase and phase-to-ground for 1 minute on each phase.
    c. Contactor phase-to-ground and across open contacts for I minute on each phase.
    d. Starter section phase-to-phase and phase-to-ground on each phase with starter contacts closed and protective devices open.
    e. Test values to comply with NETA ATS, Table 10.1.
2. Overpotential Tests:
    a. Maximum applied AC or DC voltage in accordance with manufacturer's published values. If not available, in accordance with NETA ATS, Table 11.
    b. Phase-to-phase and phase-to-ground for 1 minute for each phase of each bus section.
    c. Test results evaluated on pass/fail basis.
3. Current Injection through Overload Unit at 300 Percent of Motor Full-Load Current and Monitor Trip Time:
    a. Trip time in accordance with manufacturer's published data.
    b. Investigate values in excess of 120 seconds.
4. Control Wiring Tests:
    a. Apply secondary voltage to control power and potential circuits.
    b. Check voltage levels at each point on terminal boards and each device terminal.
    c. Insulation resistance test at 1,000 Volts DC on control wiring except that connected to solid state components.
        1) Insulation resistance to be 1 megohm minimum.
5. Operational test by initiating control devices to affect proper operation.

3.11 LOW VOLTAGE SURGE ARRESTORS

A. Visual and Mechanical Inspection:
1. Adequate clearances between arrestors and enclosures.
2. Ground connections to ground bus.

B. Electrical Tests:

1. Varistor Type Arrestors:
   a. Clamping voltage test.
   b. Rated RMS voltage test.
   c. Rated DC voltage test.
   d. Varistor arrester test values in accordance with ANSI C62.33, Sections 4.4 and 4.7.

END OF SECTION

SECTION 16951 – SHORT CIRCUIT AND COORDINATION REPORT

PART 1 – GENERAL

1.1 DESCRIPTION

A. General:
1. Prepare a short circuit analysis and protective device coordination study for the project electrical power source and distribution system.
2. The short circuit and coordination study report shall provide an evaluation of the electrical power system with the model numbers and settings of the protective devices.

B. Scope:
1. Perform and provide a complete short circuit analysis with equipment interrupting or withstand rating evaluation and a protective device coordination study for the electrical power distribution system serving the facility.
2. Include all portions of the electrical power distribution system from the utility primary service drop through and including motor loads 10 HP and greater, loads 50 KVA and larger, and protective devices 15 amperes and larger.
3. Electrical equipment bus impedance shall be assumed to be zero. Short circuit momentary duties and interrupting duties shall be calculated on the basis of maximum available fault current at each project power source or power distribution equipment including switchgear, switchboard, motor control center, and branch circuit panel boards.
4. A protective device coordination study shall be performed to determine proper selection of power fuse ratings, protective relay characteristics and settings, ratios and characteristics of associated voltage and current transformers, and circuit breaker trip characteristics and settings.
5. The coordination study shall include all voltage classes of equipment from the utility's closest upstream protective device to existing and new equipment including switchgear, switchboards, motor control centers, and 120-Volt panel boards main circuit protection.
6. Panel board branch circuit devices need not be considered. The phase overcurrent and ground-fault protection shall be included, settings for the adjustable protective devices, and electrical metering and monitoring devices.
7. An equipment evaluation study shall be performed to determine the adequacy of existing or proposed electrical equipment by tabulating and comparing the short circuit ratings with the available fault currents.
8. Problem areas or inadequacies in the proposed equipment shall be identified in the report.

1.2 REFERENCES

A. This section contains references to the following documents and they are part of this section as specified and modified. In case of conflict between the requirements of this section and those of the listed documents, the requirements of this section shall prevail.

Reference	Title
IEEE 141	Recommended Practice for Electrical Power Distribution for Industrial Plants

Reference	Title
IEEE 242	Recommended Practice for Protection and Coordination of Industrial and Commercial Power Systems

1.3 SUBMITTAL SCHEDULE

A. The report shall be submitted with the major electrical distribution equipment. and switchgear detailed product submittal.

B. The ENGINEER reviewed report shall be corrected, revised, and resubmitted as required. The report will be reviewed along with the electrical distribution and switchgear product submittal.

C. The CONTRACTOR shall distribute the ENGINEER accepted report to the major electrical distribution equipment and switchgear manufacturers before the electrical distribution equipment and switchgear is manufactured.

D. Provide an electronic copy, on flash-drive, of the protective device coordination study results as generated by the study software.

PART 2 – PRODUCTS

2.1 REPORT

A. The report shall be sealed and signed by the responsible electrical engineer, summarize the short circuit analysis, protective device coordination study, potential problem issues, conclusions, and recommendations that may affect the integrity of the project power distribution system. As a minimum, the report shall include the following.

1. The equipment manufacturer's information used to prepare the study.
2. Assumptions made during the study.
3. Short circuit calculations listing short circuit levels at each bus.
4. Simplified single line diagrams generated by the study software.
5. Coordination study time-current curves including the instrument transformer ratios, model numbers of the protective relays, relay settings, and trip unit settings associated with each breaker.
6. Comparison of short circuit duties of each bus to the withstand and interrupting capacity of the equipment protecting that bus.
7. Data used as input to the report including cable impedance, source impedance, equipment ratings, equipment time-current curves etc.

PART 3 – EXECUTION

3.1 GENERAL

A. Provide the short circuit analysis and the coordination study for the electrical power distribution system using SKM System Analysis, Inc. Power Tools, or equal.

B. The studies shall be performed in accordance with IEEE Standards 141 and 242 and shall utilize the ANSI; method of short circuit analysis in accordance with ANSI C37.010.

C. The studies shall be performed using actual equipment data for the new equipment. The analysis and study shall use the equipment and protective device data provided by the electrical distribution equipment manufacturer for the project.

3.2 SHORT CIRCUIT ANALYSIS

A. The short circuit analysis and report shall include the following:

1. One-Line Diagram:
   a. Location and function of each protective device in the system, such as relays, direct-acting trips, fuses, etc.
   b. Type designation, current rating, range or adjustment, manufacturer's style and catalog number for all protective devices.
   c. Power, voltage ratings, impedance, primary and secondary connections of all transformers.
   d. Type, manufacturer, and ratio of all instrument transformers energizing each relay.

e. Sources of short circuit currents such as utility ties, generators, synchronous motors, and induction motors.

2. Impedance Diagram:
   a. Available MVA or impedance from the power utility company.
   b. Local generated capacity impedance.
   c. Bus impedance.
   d. Transformer and/or reactor impedance.
   e. Cable impedance.
   f. Equipment impedance.
   g. System voltages.
   h. Grounding scheme (resistance grounding, solid grounding, or no grounding).
3. Calculations:
   a. Determine the paths and situations where short circuit currents are the greatest.
   b. Assume bolted faults and calculate the 3-Phase and line-to-ground short circuits of each case.
   c. Calculate the maximum and minimum fault currents.

3.3 PROTECTIVE DEVICE COORDINATION STUDY

A. The time-current characteristics of the specified and indicated protective devices shall be plotted on 5-cycle, log-log graph paper with a maximum of eight protective devices per plot. The coordination study time-current plots shall, at a minimum, include the following:
   1. Time-current for each protective relay or fuse showing graphically that the settings will provide protection and selectivity within industry standards. Each curve shall be identified, and the tap and time settings shall be specified.
   2. Time-current curves for each device shall be positioned to provide for maximum selectivity to minimize system disturbances during fault clearing. Reasonable coordination intervals and separation of characteristic curves shall be maintained.
   3. Where selectivity cannot be achieved, the report shall indicate the cause and recommend alternative solutions. Time-current curves and points for cable and equipment damage and symmetrical and asymmetrical fault currents.
   4. Circuit interrupting device operating and interrupting times.
   5. Indicate maximum fault values on the graph.
   6. Sketch of bus and breaker arrangement.

3.4 STUDY FIRM

A. The report for the short circuit analysis and protective device coordination study indicating results shall be performed, stamped, and signed by an Electrical Engineer registered in the State where the Project is located.

B. The CONTRACTOR shall provide the ENGINEER with submittal information for the electrical products used for the Project.

C. The ENGINEER performing the study must visit the project site after equipment is installed and modify the study as required, and resubmit the study.

END OF SECTION

DIVISION 17
INSTRUMENTATION
(NOT USED)

APPENDIX A
GEOTECHNICAL REPORT

American Geotechnical, Inc.
GEOTECHNICAL/CIVIL ENGINEERING, TESTING & INSPECTION

June 3, 2024 File No. 60448-01

PACE
17520 Newhope Street, Suite 200
Fountain Valley, CA 91106

Attention: Mr. Zirang Song

Subject: **GEOTECHNICAL INVESTIGATION REPORT**
Newhall Park Pool Pump Room Replacement Project
24923 Newhall Avenue
Santa Clarita, California

Dear Mr. Song:

As requested, American Geotechnical performed a geotechnical investigation for the subject project. The purpose of this investigation was to evaluate the geotechnical conditions and provide soil design parameters and earthwork recommendations for the project. This report has been prepared in accordance with our proposal dated January 19, 2024, and your written authorization.

The results of the investigation indicate that the proposed development is feasible provided the recommendations contained herein are incorporated into the project plans and specifications. This report should be reviewed in detail by all parties involved with the construction prior to proceeding further with the planned development and should be considered part of the construction documents. Should you have any questions regarding the information contained herein, please do not hesitate to contact our office. When formal plans become available, they should be forwarded to our office for review and comment before being submitted to the permitting authority.

We appreciate the opportunity to be of service. Should you have any questions regarding the information contained in this report, please do not hesitate to contact us.

Sincerely,

AMERICAN GEOTECHNICAL, INC.

REGISTERED PROFESSIONAL ENGINEER ARUMUGAM ALVAPPILLAI, Ph.D. No. GE2504 GEOTECHNICAL STATE OF CALIFORNIA

REGISTERED PROFESSIONAL ENGINEER GREGORY W. AXTEN No. GE103 GEOTECHNICAL STATE OF CALIFORNIA

Arumugam Alvappillai, Ph.D.
Principal Engineer
G.E. 2504

Gregory W. Axten
Principal Engineer/CEO
G.E. 103

Enclosures: Appendix A – Boring Logs
Appendix B – Summary of Laboratory Data
Appendix C – Geotechnical Guidelines for Grading Projects

Distribution: Addressee (Email: zsong@pacewater.com)

SP/60448-01 Geotechnical Investigation AA GWA 6-3-24 DL

1.0 INTRODUCTION

1.1 PURPOSE

The purpose of this investigation was to evaluate the site geotechnical conditions and to provide geotechnical recommendations for design and construction of the proposed development.

1.2 SCOPE OF SERVICES

The scope of the work performed during this investigation involved the following:

- Review of available reports and maps pertaining to the geotechnical conditions of the site and surrounding areas.
- Site reconnaissance to observe general site conditions.
- Subsurface exploration consisted of drilling two small diameter borings, AGSB-1, and AGSB-2 near the area of the proposed construction.
- Sampling and logging of the subsurface soil.
- Laboratory testing of selected soil samples collected from the excavations to determine the engineering properties of the soil.
- Engineering and geologic analyses of the field and laboratory data.
- Preparation of this report summarizing our findings, conclusions, and recommendations for the proposed construction.

1.3 SITE DESCRIPTION AND PROPOSED CONSTRUCTION

The site is the community pool area located within Newhall Park in the city of Newhall, California. There are various buildings including an equipment room, locker room, etc. around an in-ground pool. These pool area improvements are surrounded by an open grass field on the north and west sides, an asphalt parking lot on the south side, and Newhall Avenue on the east side. Large, mature trees are also present around the buildings. The site improvements are located on a relatively level terrain. A location map and an aerial view of the site are shown on the attached Plates 1 and 2, respectively.

The proposed construction at the site includes construction of a new single-story pool pump room on the east side of the existing pool as shown in Plate 2. The area is partly enclosed and has a concrete slab for the pool filter and other equipment. A conventional slab-on-grade foundation system will be utilized for the new building. It is our understanding that data obtained from this investigation will be used in the development of grading and foundation plans. When the final grading and foundation plans become available, the plans must be submitted to this office for review and comment. The recommendations provided herein may be revised upon our review of the grading/construction plan(s) and further site analyses.

2.0 INVESTIGATION

2.1 SUBSURFACE EXPLORATION

A subsurface investigation was performed at the site on April 25, 2024, and consisted of drilling two (2) small diameter borings AGSB-1 and AGSB-2 using a limited access drilling rig. Both borings were drilled within the landscaped area to a depth of about 20 feet below ground surface; AGSB-1 was in the east side of the pool near the proposed building while AGSB-2 was on the south side of the pool. Alluvial soils consisting of silty sand and sand with gravel were encountered in both borings to the depth explored. Groundwater was not encountered in our borings.

All borings were logged by our field personnel using both visual and tactile methods. Representative samples of the subsurface material were collected and forwarded to the laboratory for the purpose of estimating material properties for use in subsequent engineering evaluations. The approximate locations of the borings are shown on Plate 2. Detailed excavation logs are presented in Appendix A.

2.2 LABORATORY TESTING

Laboratory testing was performed on representative soil samples obtained during our field exploration. Samples were tested for the purpose of estimating material properties for use in subsequent engineering evaluations. Testing included in-situ moisture and density, maximum density/optimum moisture content, expansion index, swell/collapse, direct shear, and chemical soil testing. Our testing indicates non-expansive nature of the near surface soils with an expansion index (EI) value of 10. A summary of laboratory test results is included in Appendix B.

3.0 SITE GEOLOGY AND SEISMICITY

3.1 SITE GEOLOGY

Earth Materials

The project site is on Newhall Avenue at the Newhall Park on a generally flat area less than ½-mile between Newhall Creek and South Fork Santa Clara River. Earth materials underlying the site include Quaternary age alluvial material. The alluvial material is pervasive through the subsurface, consisting predominantly of silty sand and gravel including an up to 15-foot-thick layer of silty sand. Alluvial deposits likely originate from floodplains and historic drainage channels. Both of our borings AGSB-1 and AGSB-2 encountered alluvial materials to the depth of exploration.

Groundwater

Nearby monitoring wells show the groundwater as generally deeper than 80 feet below ground surface. The Seismic Hazard Zone Report for the Newhall quadrangle shows historic groundwater at the site as generally greater than 55 feet below ground surface. No groundwater was encountered in our borings.

Landslides

Regional geologic maps show no known landslides on site. The site is also not located in the State of California Seismic Hazard Zone for earthquake-induced landslides.

Flood Risk

The project site is located within a FEMA Flood Hazard Zone with base flood Elevation of approximately 1225 feet above sea level. The site is not located within the Tsunami Hazard Zone.

3.2 SEISMICITY

A risk common to all areas of southern California that should not be overlooked is the potential for damage resulting from seismic events. The site is located within a seismically active area, as is all Southern California. Although we are not aware of any active or potentially active faults on or within the immediate vicinity of the site, earthquakes generated on large regional faults such as the Newport-Inglewood, Elsinore, San Andreas, etc., could affect the site.

Ground Shaking

The intensity of the seismic shaking or strong ground motion at the project site during an earthquake depends on the distance between the project area and the epicenter of the earthquake, the magnitude of the earthquake, and the geologic conditions underlying and surrounding the site. Earthquakes occurring on faults closest to the project site would most likely generate the largest ground motions within the project area. Seismic design parameters regarding the ground shaking are presented in the Section 4.3

Faults

No mapped faults exist within the project site and the site is not within an Alquist-Priolo Special Study Zone. The closest mapped faults are the San Gabriel, Holser, Whitney, Sierra Madre, Santa Susana, and Simi Faults located 1.25 miles north, 2 miles north, 2.75 miles east, 4 miles south, 4.5 miles south, and 7.5 miles southwest, respectively.

Liquefaction

The site is not located within an area identified as having a potential liquefaction hazard. Liquefaction is a phenomenon in which saturated granular sediments temporarily lose their shear strength during periods of earthquake-induced strong ground shaking. The susceptibility of a site to liquefaction is a function of the depth, density, and water content of the sediments and the magnitude of an earthquake. Saturated, unconsolidated silts, sands, silty sands, and gravels within 50 feet of the ground surface are most susceptible to liquefaction. Typical effects of liquefaction include loss of bearing strength, lateral spreading, and settlement.

Earthquake-Induced Lurching, Lateral Spreading, and Landslides

The site is relatively flat with no elevation changes greater than 5 feet withing the Newhall Park. Distance to the top of slope to either stream is greater than ¼-mile. Therefore, the project site has a low susceptibility for lurching, lateral spreading, or landslide activity during a strong earthquake event.

4.0 CONCLUSIONS & RECOMMENDATIONS

4.1 BASIS

Conclusions and recommendations contained in this report are based upon information provided, information gathered, laboratory testing, engineering and geologic evaluations, experience, and judgment. Recommendations contained herein should be considered minimums consistent with industry practice. More rigorous criteria could be adopted if a lower risk of future problems is desired. Where alternatives are presented, regardless of what approach is taken, some risk will remain, as is always the case. Usually, the lowest risk is associated with the greatest cost.

4.2 SITE SUITABILITY

Geotechnical exploration, analyses, experience, and judgment result in the conclusion that the proposed development is geotechnically feasible. It is our opinion that the site can be improved without hazard of landslide, slippage, or damaging settlement, and improvement can occur without similar adverse impact on adjoining properties. Realizing this expectation will require adherence to good construction practice, agency and code requirements, the recommendations in this report, and possible addendum recommendations made after plan review and at the time of construction.

4.3 SEISMIC DESIGN CONSIDERATION

Based on the available information about the fault zone closest to the site and the soil conditions, the following seismic design parameters are recommended according to the California Building Code (CBC). Final selection of the appropriate seismic design coefficients should be made by the structural consultant based on the local laws and ordinances, expected response of the proposed structure and desired level of conservatism.

TABLE 1 Seismic Hazard Response and Design Parameters (Latitude: 34.386° - Longitude: -118.538°		
Seismic Parameter	**Symbol**	**Value**
Site Class	-	D
Risk Category	-	II
Spectral response acceleration parameter at short periods adjusted for site class effects	S_{MS}	2.65g
Spectral response acceleration parameter at a period of 1 s adjusted for site class effects	S_{M1}	1.99g
Design spectral response acceleration parameter at short periods	S_{DS}	1.77g
Design spectral response acceleration parameter at a period of 1 s	S_{D1}	1.32g
Peak Ground Acceleration adjusted for site class effects	PGA_M	0.99g
Notes: 1. The above design parameters are determined based on Site Class D using ASCE Hazard Tool.		

It should be realized that the purpose of the seismic design utilizing the above parameters is to safeguard against major structural failures and loss of life, but not to prevent damage altogether. Even if the structural engineer provides designs in accordance with the applicable codes for seismic design, the possibility of damage cannot be ruled out if moderate to strong shaking occurs as a result of a large earthquake. This is the case for essentially all structures in Southern California.

4.4 Grading

General

Grading is required for the proposed construction. When grading is conducted, it should be done in accordance with good construction practices, minimum code requirements, and the recommendations to follow. General guidelines for grading projects are also provided in Appendix C.

Site Preparation and Grading

Prior to the start of grading operations, utility lines within the project area, if any, should be located and marked in the field so they can be rerouted or protected during site development. All vegetation, debris, and other perishable material within the area of construction should be removed from the site. If the proposed construction requires demolition of any existing improvements/structures, all associated concrete slab and footing in the area of demolition should be entirely removed and hauled away from the site.

The grading needs to be performed to recompact near surface loose materials and to create a zone of structural fill for the proposed foundation and slab-on-grade floor system. Based on the information obtained from our investigation, a minimum over-excavation of 4 feet is recommended throughout the pad area for the proposed building. The actual removal depth may be locally increased based on the soil conditions encountered during grading. The over-excavation should also provide for a minimum of 2 feet of a properly compacted fill blanket below the bottom of the foundation system. In areas where less critical improvements such as walkways, minimum depth of over-excavation and re-compaction is 2 feet.

Based on our exploration at the site, the material present on-site can be easily excavated with conventional construction equipment. A representative of the geotechnical engineer should be present to review all excavations prior to placing fill. Except at fixed boundary conditions, such as the property boundaries, the limits of remedial grading should extend a minimum of 5 feet beyond the footprint of the proposed improvements. In the area where the construction abuts the property line walls or existing buildings, it is recommended that a temporary 1.5:1 (horizontal:vertical) backcut be made to help mitigate potential damage to existing structure. When excavations deeper than 4 feet are made, the contractor should provide temporary construction slopes and/or shoring as necessary. Temporary construction slopes should be no steeper than 1.5:1 (horizontal:vertical). It should be realized that the site is underlain by silty sand and sand that are subjected to sloughing and caving. Sheeting and bracing should be provided by the contractor, as necessary, to protect workers in the excavation.

Though not anticipated at this time, any permanent cut and fill slopes should not be constructed steeper than 2:1 (horizontal:vertical) and should be considered subject to review by the geotechnical consultant at the time of grading. These slopes should possess sufficient compacted fines to limit erosion risk. If

upon construction, relatively clean, cohesionless sands are encountered, reconstruction by blending in fines to compacted fill and/or flattening of slopes will be advised.

Where excavations undermine existing improvements, such as the existing walls, etc., temporary structural support should be provided to reduce the risk of damage resulting from undercutting. Though not anticipated at this time, any permanent cut and fill slopes should not be constructed steeper than 2:1 and should be considered subject to review by the geotechnical consultant at the time of grading. These slopes should possess sufficient compacted fines to limit erosion risk. If upon construction, relatively clean, cohesionless sands are encountered, reconstruction by blending in fines to compacted fill and/or flattening of slopes will be advised.

Where fill is to be placed, the upper 6 to 8 inches of the surface exposed by the excavation should be scarified, moisture-conditioned to 2 to 3 percent over optimum moisture content and compacted to 90 percent relative compaction.[1] If localized areas of relatively loose soil prevent proper compaction, over-excavation and re-compaction will be necessary. The on-site soil is generally suitable for use as compacted fill, provided that any cobbles or rock fragments greater than 4 inches are screened and removed from the soil prior to placement and compaction. A limitation of particle size to 2 inches is preferred.

All grading should be conducted in accordance with the applicable codes, agency requirements, the aforementioned recommendations, and the grading guidelines that accompany this report as mentioned above.

<u>Import Fill Material</u>

The import fill material, if utilized, should meet the following criteria:

1. No particles larger than 4 inches in largest dimension (limit to 2 inches is preferred).
2. Free of perishable material.
3. Plasticity Index of 20 or less and Liquid Limit of 40 or less.
4. Expansion Index of 20 or less.

[1] Relative compaction refers to the ratio of the in-place dry density of soil to the maximum dry density of the same material as obtained by the "modified proctor" (ASTM D1557) test procedure.

4.5 Preliminary Foundation Recommendations

General

Minimum criteria for the design of foundations applicable to the project are provided below. The criteria should not be considered a substitute for design by a structural engineer. The structural engineer should analyze the actual soil-structure interaction and consider, as needed, bearing, expansive soil influences, strength, stiffness, and deflections in the various slab, foundation, and other elements of the proposed structure to develop appropriate, design-specific details. Other influences may have to be considered as conditions dictate. The structural engineer should consider all applicable codes and authoritative sources where needed. If analyses by the structural engineer result in less critical details than are provided herein as minimums, the minimums presented herein should be adopted. It is likely that some more restrictive details will be required. If the structural engineer has any questions or requires further assistance, please do not hesitate to call or otherwise transmit the engineer's requests.

Foundation Design

The proposed building can be supported on a conventional shallow foundation system on compacted fill. A minimum of 2 feet of compacted fill blanket below the bottom of the footing is recommended. Allowable design parameters for foundations are provided below.

Minimum exterior and interior footings embedment into compacted fill (measured from lowest adjacent grade) ..... 24 inches

Minimum footing width ..... 16 inches

Allowable Bearing pressure

a. Sustained loads (pounds per square foot) ..... 2,000 psf

b. Total loads (including wind or seismic, increase by one-third) ..... 3,000 psf

Allowable Resistance to lateral loads

a. Passive soil resistance (pounds per cubic foot) within compacted fill ..... 200 pcf

b. Coefficient of sliding friction 0.45

The allowable bearing pressures are for dead plus long-term live loads and include a factor-of-safety of at least 3.0. The allowable bearing pressure indicated above can be increased by 500 psf for every additional foot of embedment, but not to exceed 3,000 psf. It should be noted that a minimum 2 feet of uniform fill blanket below the footing bottom is recommended above. As such, if the footing depth is increased, the minimum depth of removal and recompaction should also be increased accordingly.

Footings can be designed to resist lateral loads by using a combination of sliding friction and passive resistance. The coefficient of friction should be applied to dead load forces only. The upper 1-foot of passive resistance should be neglected where the soil is not confined by slabs or pavements.

Footings designed and constructed in accordance with the foregoing criteria are expected to settle less than 1-inch. Differential settlement of approximately half of the total settlement is expected over a distance of about 50 feet.

Building Slab-on-Grade

The slab-on-grade in the interior of the building should be a minimum of 5 inches thick and reinforced with No. 4 bars at 12 inches on center, both ways. The structural engineer should provide final slab detailing as necessary based on the overall foundation design. The slab should be underlain by 20-mil Stego wrap membrane unless potential moisture intrusion through concrete floor can be tolerated. The Stego membrane splices should be staggered between layers. The membrane should be sealed at all splices, around plumbing, and at the perimeter of slab areas. Every effort should be made to provide a continuous barrier and care should be taken not to puncture the membrane. Below the membrane and on top of the subgrade, an approximately 4-inch thick layer of free-draining crushed rock base (e.g., 3/4-inch rock) is suggested. The crushed rock should have no more than 10 percent passing the 3/4-inch sieve or more than 3 percent passing the No. 200 sieve. To protect the Stego membrane from the angular corners of crushed rock, a layer of Mirafi 140N should be placed on the rock subgrade with 8-inch laps at splices.

4.6 Retaining Walls

If retaining walls are planned, they should be designed to resist an equivalent fluid pressure of 50 and 65 pounds per cubic foot (pcf) for level and 2:1 backfill conditions, respectively. Appropriate allowances

should be made for anticipated surcharge loading. It is assumed that the project engineer will incorporate an appropriately designed wall backdrain system for the purpose of mitigating potential for hydrostatic and/or seepage forces. It is also assumed that a predominantly granular, non-expansive backfill is provided. The minimum widths recommended for granular backfill are 1.5 feet at the base of the wall and 0.6 times that height of the wall at the top. The uppermost 1.0 to 1.5 feet preferably should be backfilled with more cohesive material to minimize surface infiltration.

If walls are restrained against free movement by structural detailing, the active values given above should be increased. Although actual increase depends on the degree of restraint, 50 percent is recommended for design purposes. Walls designed without this restraint-related surcharge should anticipate wall rotation up to 0.01H.

Although not proposed at this time, for any walls with retaining height of more than 6 feet, seismic earth pressure should be added to the static earth pressure given above. The recommended seismic earth pressure for the site is 20 pcf. For simplicity, the seismic earth pressure can be applied as a uniform pressure equal to 10 times H, where H is the retained height.

It should be pointed out that the use of heavy compaction equipment in close proximity to the retaining walls can result in excess wall movement and/or soil loadings exceeding the design values. In this regard, care should be taken during the backfilling operations.

Waterproofing

If retaining walls form portions of the building interiors, very special consideration should be given to waterproofing of the walls to prevent damage to the building interior. Unless dampness is acceptable on exterior wall faces, waterproofing should also be incorporated into the exterior retaining wall design.

Even though groundwater is not expected to be a problem at this site, extreme care should be exercised in sealing walls against water and water vapor migration. Where retaining walls are planned against the interior space, continuity should be provided between the aforementioned wall moisture proofing on the back of the retaining wall and the moisture barrier typically placed under the slab areas. This waterproofing is necessary to prevent the foundation concrete acting as a wick through which moisture

migrates to the interior space despite the wall moisture proofing. Watertight foundation concrete should also be provided. The architect or structural engineer should develop the actual waterproofing details.

4.7 Exterior Flatwork

If exterior flatwork is considered, it should be placed over newly placed compacted fill. The new exterior flatwork should be at least 5 inches thick with No. 4 bars at 12 inches on center, each way. As recommended for interior slabs, a 4-inch thick crushed rock base under the slab and above the subgrade is also suggested. At least two No. 4 bars should be planned within the perimeter 6 inches and within 6 inches of planned control joints. Control joints should be planned at not more than 12-foot spacing for larger concrete areas such as the driveway and patio areas. Narrower areas of flatwork such as walkways should have control joints planned at not greater than 1.5 times the width of the walkway. Additionally, it is also recommended that at least 12-inch deepened footings be constructed along the edges of the patio slab and larger concrete flatwork.

Movement of exterior slabs adjacent to structures can be mitigated by doweling slabs to perimeter footings. Doweling should consist of No. 4 bars bent around exterior footing reinforcement. Dowels should be extended at least 2 feet into planned exterior slabs. Doweling should be spaced consistent with the patio reinforcement schedule. With doweling, 3/8-inch minimum thickness expansion joint material should be provided. Where expansion joint material is provided, it should be held down about 3/8 inch below the surface. The expansion joints should be finished with a color matched, flowing, flexible sealer (e.g., pool deck compound) sanded to add mortar-like texture. As an option to doweling, an architectural separation could be provided between the main structures and abutting appurtenant improvements.

4.8 Utility Trench Backfill

All utility trench excavations should be performed in accordance with Occupational Safety and Health Administration (OSHA) requirements. Depending on the depth of the excavations, temporary shoring may be necessary. The trenches should not be located within the influence of footings for the planned improvements. The zone of influence is defined as 1:1 projection from the bottom outside edges of the footings.

It is recommended that the utility pipes be underlain by a minimum of 3 inches of bedding material. This bedding material should be predominantly granular with a minimum sand equivalent of 30. Additionally, it is recommended that the soil engineer inspect the bottom of the excavations and determine the suitability of the supporting materials. Any loose debris at the bottom of the excavations should be removed and replaced with bedding soil.

The onsite materials may be used as backfill material. The backfill soil should be placed within the excavation in thin layers, 8 inches or less in thickness, and be compacted to at least 90 percent to the maximum laboratory density. Care should be exercised to prevent damage to the pipes during the compaction effort.

4.9 Concrete

Laboratory testing indicated that the surface soil at the site has low levels of sulfates, and as such no special sulfate resistant concrete mix design is required. However, based on the resistivity levels, the site soil is moderately corrosive for embedded steel. To reduce risk of corrosion, we recommend that the water-to-cement ratio in the concrete should be limited to 0.45. Use of utilizing Type V cement is also preferred. Limited use (subject to approval of mix designs) of a water-reducing agent may be included to increase workability. The concrete should be properly cured to minimize risk of shrinkage cracking. One-inch hard rock mixes are recommended. Pea-gravel mixes are specifically not recommended but could be utilized for relatively non-critical improvements (e.g., flatwork) and other improvements provided the mix designs consider limiting shrinkage. Contractors/other designers should take care in all aspects of designing mixes, detailing, placing, finishing, and curing concrete. The mix designers and contractor are advised to consider all available steps to reduce cracking. The use of shrinkage compensating cement or fiber reinforcing should be considered. Mix designs proposed by the contractor should be considered subject to review by the project engineer.

4.10 Drainage

The project civil engineer is usually the party responsible for site drainage. We recommend that positive drainage be established around the building and in other areas. Roof gutters and downspouts tied to a tight-line below grade pipe system is ideal for collecting and efficiently disposing of roof run-off. General drainage guidelines are provided below.

Drainage should be directed away from structures via non-erodible conduits to suitable disposal areas. Five percent drainage is recommended directly away from structures. At least two percent minimum is recommended for drainage over soil areas. In pipes or paved swales, one percent should be adopted as the minimum unless otherwise recommended by the project civil engineer. For yard drains, a 4-inch minimum pipe diameter is recommended because experience has shown that 3-inch pipes tend to clog easier. All enclosed planters should be provided with a suitably located drain or drains and/or flooding protection in the form of weep holes or similar. Preferably (i.e., not a requirement), structures should have roof gutters and downspouts tied directly to the yard drainage system.

4.11 Plan Review

When detailed grading and structural plans are developed, they should be forwarded to this office for review and comment.

4.12 Field Construction Review

During construction, a number of reviews by this office are recommended to verify the site geotechnical conditions and conformance with the intentions of the recommendations for construction. Although not all possible geotechnical observation and testing services are required by the City, the more site reviews requested, the lower the risk of future problems. The following site reviews are advised, some of which will probably be required by the agencies.

Preconstruction/pregrading meeting ..... Advised
Soil and geologic observation and testing during any grading ..... Required
Foundation excavation ..... Required
Subgrade preparation for slabs ..... Required
Reinforcement for slab/foundations ..... Advised

Unless otherwise agreed to in writing, all supplemental consulting services will be provided on an as-needed, time-and-expense fee schedule basis.

5.0 REMARKS

Only a portion of subsurface conditions have been reviewed and evaluated. Conclusions, recommendations, and other information contained in this report are based upon the assumptions that subsurface conditions do not vary appreciably between and adjacent to observation points. Although no significant variation is anticipated, it must be recognized that variations can occur.

This report has been prepared for the sole use and benefit of our client. The intent of the report is to advise our client on geotechnical matters involving the proposed improvements. It should be understood that the geotechnical consulting provided and the contents of this report are not perfect. Any errors or omissions noted by any party reviewing this report, and/or any other geotechnical aspect of the project, should be reported to this office in a timely fashion. The client is the only party intended by this office to directly receive the advice. Subsequent use of this report can only be authorized by the client. Any transferring of information or other directed use by the client should be considered "advice by the client."

Geotechnical engineering is characterized by uncertainty. Geotechnical engineering is often described as an inexact science or art. Conclusions and recommendations presented herein are partly based upon the evaluations of technical information gathered, partly on experience, and partly on professional judgment. The conclusions and recommendations presented should be considered "advice." Other consultants could arrive at different conclusions and recommendations. Typically, "minimum" recommendations have been presented. Although some risk will always remain, lower risk of future problems would usually result if more restrictive criteria were adopted. Final decisions on matters presented are the responsibility of the client and/or the governing agencies. No warranties in any respect are made as to the performance of the project.

REFERENCES

California Department of Water Resources, California's Groundwater Live, accessed May 2024

California Geological Survey (CGS), Information Warehouse. Regulatory Maps, accessed May 2024

California Geological Survey (CGS), 1997, Seismic hazard zone report for the Newhall 7.5-minute quadrangle, Ventura County, California, Department of Conservation, SHZR-004

California Geological Survey (CGS), 1998, Earthquake zones of required investigation, Newhall quadrangle, Department of Conservation, Scale 1:24,000

California Geological Survey (CGS), Landslide Inventory (Beta), accessed May 2024

Schafer Dixon Associates, Inc., 1990, Foundation investigation: San Fernando Road bridge over Placerita Creek and Magic Mountain Parkway bridge over Santa Clara River Southfork, Santa Clarita, California

Dibblee, T.W., and Ehrenspeck, H.E., 1996, Geologic map of the Newhall quadrangle, Los Angeles County, California, Dibblee Geological Foundation, Dibblee Foundation Map DF-56, Scale 1:24,000

Federal Emergency Management Agency (FEMA), FEMA Flood Map Service Center, accessed May 2024

State Water Resources control Board, GeoTracker GAMA Groundwater Information System Website, Accessed May 2024

US Geologic Survey (USGS), Unified Hazard Tool, accessed February 2024

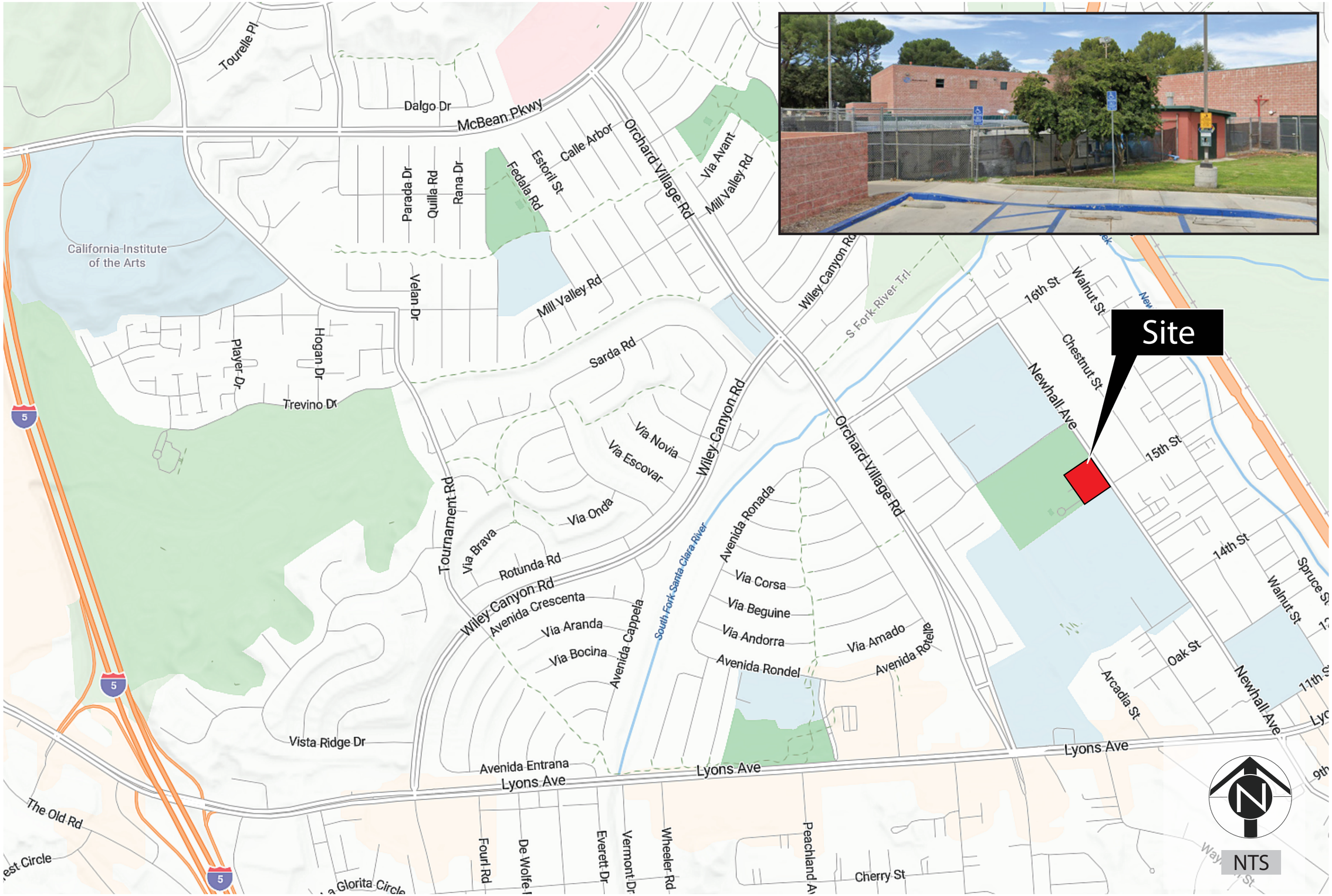

AMERICAN GEOTECHNICAL, INC.
22725 Old Canal Road
Yorba Linda, CA
(714) 685-3900

Site Location Map
Newhall Park Pool
Newhall, CA

FILE NO.
60448-01

DATE
June 2024

Plate:
1

AMERICAN GEOTECHNICAL, INC.
22725 Old Canal Road
Yorba Linda, CA
(714) 685-3900

Aerial View / Boring Location Map

Newhall Park Pool
Newhall, CA

FILE NO.
60448-01

DATE
June 2024

Plate:
2

APPENDIX A

Boring Logs

Boring No:	**AGSB-1**	**FN:**	**60448-01**
Project Name:	Newhall Park Pool Pump Room Project	Sheet:	1 of 1
Location:	24923 Newhall Avenue, Newhall, CA	Start:	4/25/2024
Estimated Surface Elev.	1222 +/- feet	End:	4/25/2024
Total Depth (ft.)	21.5 +/- feet	Initials:	MJ
Drill Rig Type (hammer, drop, etc.)	Mini Limited Access Rig, 140# hammer w/ 30" drop		
Boring Diameter, Groundwater, etc.	8" dia., No Groundwater		

Depth (feet)	Sample Type: INTACT	Sample Type: BULK	Blow Counts	Dry Unit Wt (PCF)	Moisture Content (%)	Laboatory Tests	USCS Symbol	Graphic Log	Field Description: Surface Condition: Grass Subsurface Conditions: FORMATION; Color, Classification, Moisture content, density/stiffness, etc.
0							SM		0-0.5' **Top Soil**
									0.5-6' **Silty Sand**, dark reddish brown, moist, loose to medium dense, fine to very fine grained
	X		4	93	12.9				
5	X		5	94.4	9.2				
	X		10	99.3	10.9		SM		6-15' **Silty Sand**, dark brown, moist, medium dense fine to very fine grained, trace gravel
10	X		6	93.9	12.9				@10' w/ orange staining
15	X		17	109.7	13.6		SP		15-21.5' **Sand w/ silt and gravel**, dark brown to orange brown, slightly moist to moist, medium dense to dense, fine to coarse grained
20	X		9	112	3.3				
									End of boring @ 21.5', backfilled with soil spoils

Notes:

X Ring samples

PLATE A1

American Geotechnical, Inc.
GEOTECHNICAL ENGINEERING / MATERIALS TESTING & INSPECTION

Boring No:	**AGSB-2**	**FN:**	**60448-01**
Project Name:	Newhall Park Pool Pump Room Project	Sheet:	1 of 1
Location:	24923 Newhall Avenue, Newhall, CA	Start:	4/25/2024
Estimated Surface Elev.	1222 +/- feet	End:	4/25/2024
Total Depth (ft.)	20.5 +/- feet	Initials:	MJ
Drill Rig Type (hammer, drop, etc.)	Mini Limited Access Rig, 140# hammer w/ 30" drop		
Boring Diameter, Groundwater, etc.	8" dia., No Groundwater		

Depth (feet)	Sample Type: INTACT	Sample Type: BULK	Blow Counts	Dry Unit Wt (PCF)	Moisture Content (%)	Laboatory Tests	USCS Symbol	Graphic Log	Field Description: Surface Condition: Grass / Subsurface Conditions: FORMATION; Color, Classification, Moisture content, density/stiffness, etc.
0							SM		0-1' **Top Soil**
									1-10' **Silty Sand w/ gravel** , mottled tan and orange brown, moist, medium dense, coarse grained with some fine grains
	X		16	104.1	3				
5	X		7	104.1	3.1				
	X		13	103.7	8.1				@6' becomed dark brown, very fine to fine grained w/ roots
10	X		19	99.4	5.6		SP		10-20.5' **Sand w/ silt**, dark brown, slightly moist, medium dense, fine to medium grained @11' becomes fine to coarse grained
15	X		18	105.2	4.6				
20	X		50 for 6"						@20' Refusal; no recovery

Notes:

X Ring samples

PLATE A2

American Geotechnical, Inc.
GEOTECHNICAL ENGINEERING / MATERIALS TESTING & INSPECTION

APPENDIX B

Summary of Laboratory Data

Table B1: Laboratory Testing Summary

Address: 24923 Newhall Avenue, Newhall, CA
File No.: 60448-01

Excavation ID	Sample Depth (ft.)	Moisture Content (%)	Dry Density (pcf)	Saturation (%) S.G.=2.7	Max. Density (pcf)	Opt. Moisture Content (%)	Expansion Index (EI)	Swell (+) / Collapse (-) (%)
AGSB-1	0.5-10'	-	-	-	125.3	10.1	10.0	-
	2-3.5'	12.9	93.0	43	-	-	-	-
	4-5.5'	9.2	94.4	32	-	-	-	-0.25@480 psf
	6-7.5'	10.9	99.3	42	-	-	-	-
	10-11.5'	12.9	93.9	44	-	-	-	-0.6@1200 psf
	15-16.5'	13.6	109.7	69	-	-	-	-
	20-21.5'	3.3	112.0	18	-	-	-	-0.2@2400 psf
AGSB-2	2-3.5'	3.0	104.1	13	-	-	-	-
	4-5.5'	3.1	104.1	14	-	-	-	-
	6-7.5'	8.1	103.7	35	-	-	-	-0.55@720 psf
	10-11.5'	5.6	99.4	22	-	-	-	-
	15-16.5'	4.6	105.2	21	-	-	-	-0.25@1800 psf

American Geotechnical, Inc.

GEOTECHNICAL ENGINEERING / MATERIALS TESTING & INSPECTION

Project Name:	Newhall Park Pool Pump	Sample I.D.:	AGSB-1
File No:	60448-01	Depth:	6"-10'
Date Sampled	4/25/2024	Test Date :	5/6/2024 Tested By : RH
Address:	24923 Newhall Ave.	Soil Description:	Silty Sand w/ clay

RESISTIVITY - CTM 643		CORROSION POTENTIAL
MINIMUM RESISTIVITY (OHM CM):	**5700**	**Moderately Corrosive**

pH[1] - CTM 643
8.32

Temperature ©
20.8

CHLORIDE - CTM 422		
mg/kg	PPM(2)	CORROSION POTENTIAL
12	**12**	**Slightly Corrosive**

SULFATE - CTM 417		
mg/kg	PPM(2)	CORROSION POTENTIAL
3	**3**	**Negligible**

Sulfates (SO_4 mg/kg)[3]		**Chlorides (mg/kg)[4]**		**Resistivity (Ω-cm)[5]**	
		< 10	Negligible	> 20,000	Essentially non-Corrosive
0-1000	Negligible	10-25	Slightly Corrosive	10,000 - 20,000	Mildly Corrosive
1000-2000	Moderate	25-100	Moderately Corrosive	5,000 - 10,000	Moderately Corrosive
2000-20000	Severe	100-500	Very Corrosive	3,000 - 5,000	Corrosive
> 20000	Very Severe	> 500	Extremely Corrosive	1,000 - 3,000	Highly Corrosive
Sulfate corrodes some types of concrete		Chloride corrodes some types of metals		< 1,000	Extremely Corrosive
				Resistivity indicates how corrosive soil can be.	

[1] pH < 5 Corrosive

[2] In soil 1000mg/kg = 1000ppm = 0.10%

[3] Sulfate Ranges from ACI 318 Building Code [Table 4.3.1].

[4] Chloride Ranges from NAVFAC, DM-5 pg.5-9-53

[5] Resistivity Ranges from National Association of Corrosion Engineers(NACE International Resorce Center)

Samples Tested	1	2	3	
Boring ID	AGSB-1	AGSB-1	AGSB-1	
Depth (in/ft.)	4'-5.5'	10'-11.5'	20'-21.5'	
Initial Dry Density (pcf)	94.4	93.9	112	
Initial Moisture Content (%)	9.2	12.9	3.3	
Normal Stress (psf)	500	1200	2400	
Maximum Shear Stress (psf)	658	1111	2896	
Ultimate Shear Stress (psf)	602	1111	2669	
ASTM D3080 Soil Type	Intact	Intact	Intact	

	Peak	Ultim.
Friction, phi (Deg)	49	47
Cohesion (psf)	0	0

Sample Type:	Intact
Method:	Drained
Consolidation:	Yes
Saturation:	Yes
Strain Rate (in/min):	0.0033

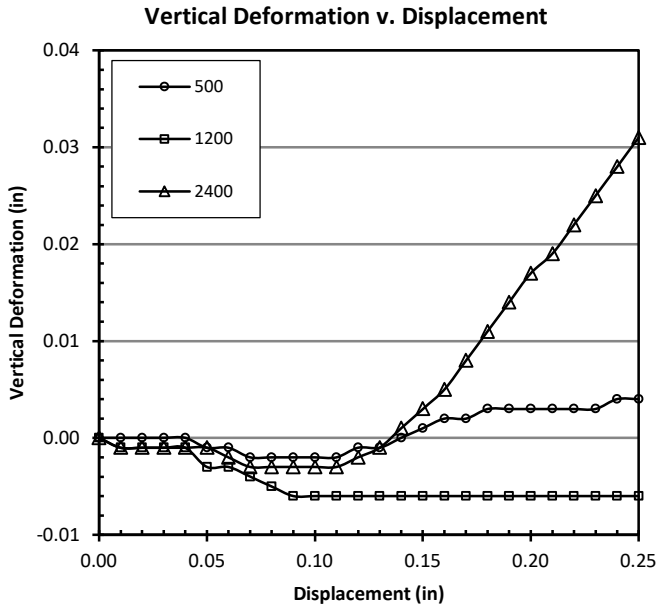

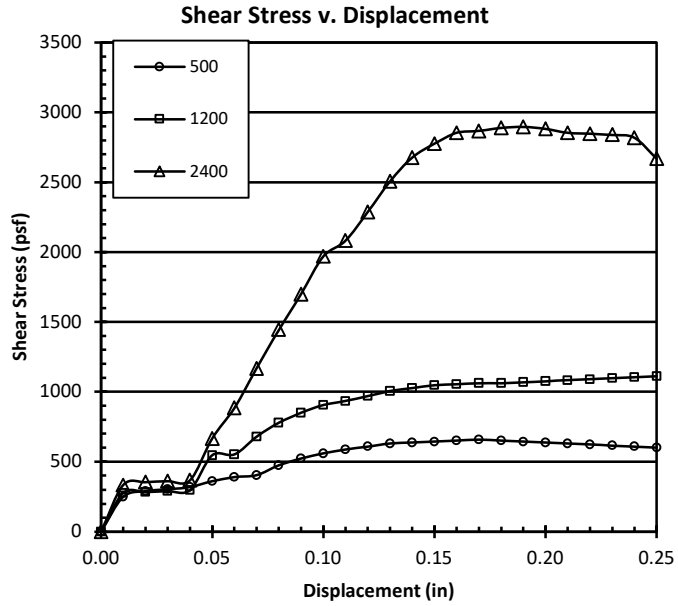

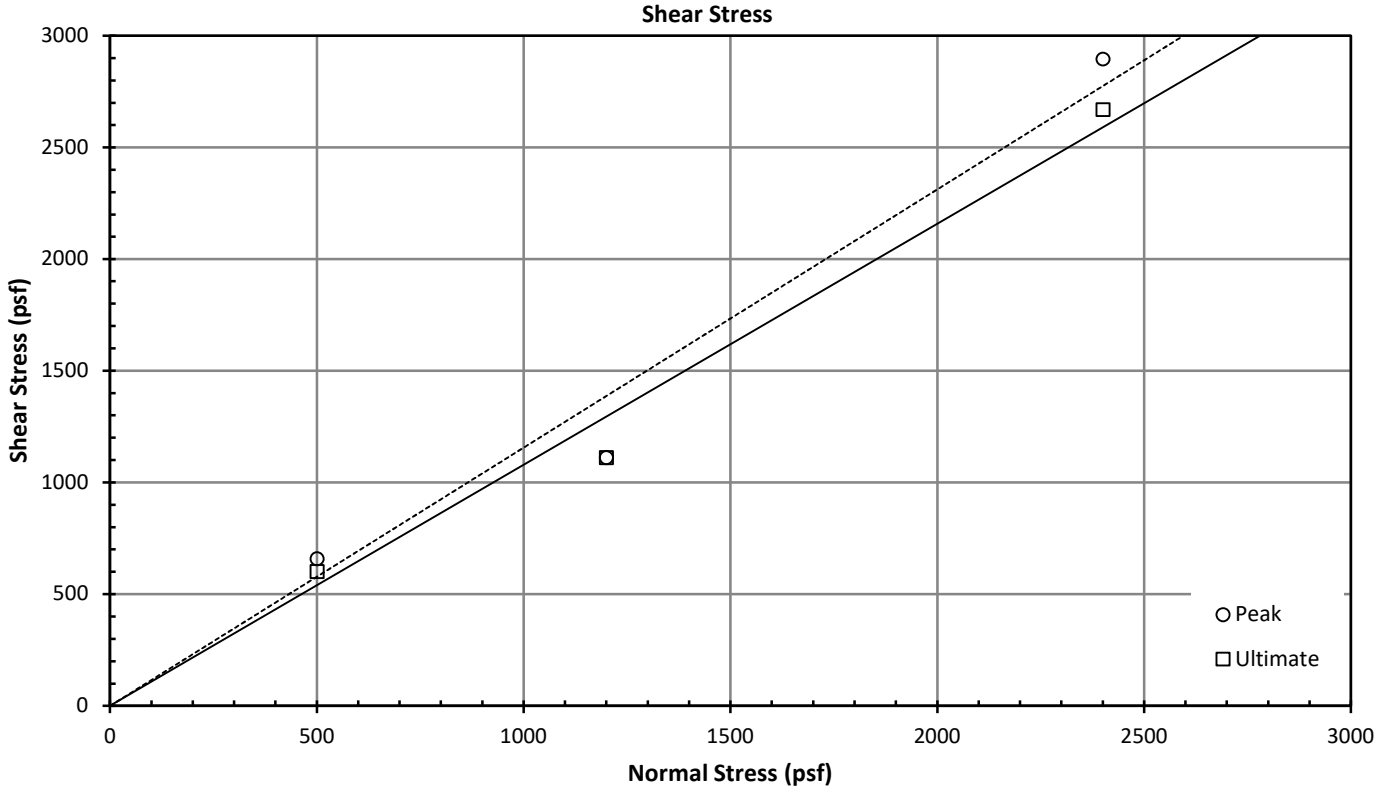

American Geotechnical, Inc.	DIRECT SHEAR TEST RESULTS Newhall Park Pool Pump Room Rep. 24923 Newhall Ave., Newhall	F.N.: 60448-01 Date: May 2024	Plate B1

APPENDIX C

Geotechnical Guidelines for Grading Project

TABLE OF CONTENTS

A. GENERAL 1

B. DEFINITIONS OF TERMS 2

C. OBLIGATIONS OF PARTIES 6

D. SITE PREPARATION 7

E. SITE PROTECTION 8

F. EXCAVATIONS 10
- F1 UNSUITABLE MATERIALS 10
- F2 CUT SLOPES 10
- F3 PAD AREAS 11

G. COMPACTED FILL 12
- G1 PLACEMENT 12
- G2 MOISTURE 14
- G3 FILL MATERIAL 14
- G4 FILL SLOPES 16
- G5 OFF-SITE FILL 19

H. DRAINAGE 20

I STAKING 21

J. MAINTENANCE 22
- J1 LANDSCAPE PLANTS 22
- J2 IRRIGATION 22
- J3 MAINTENANCE 22
- J4 REPAIRS 23

K. TRENCH BACKFILL 24

L STATUS OF GRADING 25

STANDARD DETAILS NOS. 1-9

- 1 CANYON SUBDRAIN
- 2 FILL OVER NATURAL/ CUT SLOPE
- 3 STABILIZATION/ BUTRESS FILL
- 4 STABILIZATION FILL
- 5 FUTURE CANYON FILL
- 6 TRANSITION LOT OVEREXCAVATION
- 7 ROCK DISPOSAL
- 8 MINOR SLOPE REPAIR
- 9 LOT DRAINAGE

GEOTECHNICAL GUIDELINES FOR GRADING PROJECTS

A. GENERAL

Al The guidelines contained herein and the standard details attached hereto represent this firm's standard recommendations for grading and other associated operations on construction projects. These guidelines should be considered a portion of the project specifications.

A2 All plates attached hereto shall be considered as part of these guidelines.

A3 The Contractor should not vary from these guidelines without prior recommendation by the Geotechnical Consultant and the approval of the Client or his authorized representative. Recommendations by the Geotechnical Consultant and/or Client should not be considered to preclude requirements for approval by the controlling agency prior to the execution of any changes.

A4 These Standard Grading Guidelines and Standard Details may be modified and/or superseded by recommendations contained in the text of the preliminary geotechnical report and/or subsequent reports.

A5 If disputes arise out of the interpretation of these grading guidelines or standard details, the Geotechnical Consultant shall provide the governing interpretation.

B. DEFINITIONS OF TERMS

Bl ALLUVIUM - unconsolidated detrital deposits resulting from flow of water, including sediments deposited in river beds, canyons, flood plains, lakes, fans at the foot of slopes and estuaries.

B2 AS-GRADED (AS-BUILT) - the surface and subsurface conditions at completion of grading.

B3 BACKCUT - a temporary construction slope at the rear of earth retaining structures such as buttresses, shear keys, stabilization fills or retaining walls.

B4 BACKDRAIN - generally a pipe and gravel or similar drainage system placed behind earth retaining structures such as buttresses, stabilization fills and retaining walls.

B5 BEDROCK - a more or less solid, relatively undisturbed rock in place either at the surface or beneath superficial deposits of soil.

B6 BENCH - a relatively level step and near vertical rise excavated into sloping ground on which fill is to be placed.

B7 BORROW (Import) - any fill material hauled to the project site from off-site areas.

B8 BUTTRESS FILL - a fill mass, the configuration of which is designed by engineering calculations to stabilize a slope exhibiting adverse geologic features. A buttress is generally specified by minimum key width and depth and by maximum backcut angle. A buttress normally contains a backdrain system.

B9 CIVIL ENGINEER - the Registered Civil Engineer or consulting firm responsible for preparation of the grading plans, surveying and verifying as-graded topographic conditions.

B10 CLIENT - the Developer or his authorized representative who is chiefly in charge of the project. He shall have the responsibility of reviewing the findings and recommendations made by the Geotechnical Consultant and shall authorize the Contractor and/or other consultants to perform work and/or provide services.

B11 COLLUVIUM - generally loose deposits usually found near the base of slopes and brought there chiefly by gravity through slow continuous downhill creep (also see Slope Wash).

B12 COMPACTION - is the densification of a fill by mechanical means.

B13 CONTRACTOR - a person or company under contract or otherwise retained by the Client to perform demolition, grading and other site improvements.

B14 DEBRIS - all products of clearing, grubbing, demolition, contaminated soil material unsuitable for reuse as compacted fill and/or any other material so designated by the Geotechnical Consultant.

B15 ENGINEERING GEOLOGIST - a Geologist holding a valid certificate of registration in the specialty of Engineering Geology.

B16 ENGINEERED FILL - a fill of which the Geotechnical Consultant or his representative, during grading, has made sufficient tests to enable him to conclude that the fill has been placed in substantial compliance with the recommendations of the Geotechnical Consultant and the governing agency requirements.

B17 EROSION - the wearing away of the ground surface as a result of the movement of wind, water and/or ice.

B18 EXCAVATION - the mechanical removal of earth materials.

B19 EXISTING GRADE - the ground surface configuration prior to grading.

B20 FILL - any deposits of soil, rock, soil-rock blends or other similar materials placed by man.

B21 FINISH GRADE - the ground surface configuration at which time the surface elevations conform to the approved plan.

B22 GEOFABRIC - any engineering textile utilized in geotechnical applications including subgrade stabilization and filtering.

B23 GEOLOGIST - a representative of the Geotechnical Consultant educated and trained in the field of geology.

B24 GEOTECHNICAL CONSULTANT - the Geotechnical Engineering and Engineering Geology consulting firm retained to provide technical services for the project. For the purpose of these guidelines, observations by the Geotechnical Consultant include observations by the Soil Engineer, Geotechnical Engineer, Engineering Geologist and those performed by persons employed by and responsible to the Geotechnical Consultants.

B25 GEOTECHNICAL ENGINEER - a licensed Civil Engineer who applies scientific methods, engineering principles and professional experience to the acquisition, interpretation and use of knowledge of materials of the earth's crust for the evaluation of engineering problems. Geotechnical Engineering encompasses many of the engineering aspects of soil mechanics, rock mechanics, geology, geophysics, hydrology and related sciences.

B26 GRADING - any operation consisting of excavation, filling or combinations thereof and associated operations.

B27 LANDSLIDE DEBRIS - material, generally porous and of low density, produced from instability of natural or man-made slopes.

B28 MAXIMUM DENSITY - standard laboratory test for maximum dry unit weight. Unless otherwise specified, the maximum dry unit weight shall be determined in accordance with ASTM Method of Test D 1557-78.

B29 OPTIMUM MOISTURE - test moisture content at the maximum density.

B30 RELATIVE COMPACTION - the degree of compaction (expressed as a percentage) of dry unit weight of a material as compared to the maximum dry unit weight of the material.

B31 ROUGH GRADE - the ground surface configuration at which time the surface elevations approximately conform to the approved plan.

B32 SITE - the particular parcel of land where grading is being performed.

B33 SHEAR KEY - similar to buttress, however, it is generally constructed by excavating a slot within a natural slope in order to stabilize the upper portion of the slope without grading encroaching into the lower portion of the slope.

B34 SLOPE - is an inclined ground surface the steepness of which is generally specified as a ratio of horizontal:vertical (e.g., 2:1).

B35 SLOPE WASH - soil and/or rock material that has been transported down a slope by mass wasting assisted by runoff water not confined by channels (also see Colluvium).

B36 SOIL - naturally occurring deposits of sand, silt, clay, etc. or combinations thereof.

B37 SOIL ENGINEER - licensed Civil Engineer experienced in soil mechanics (also see Geotechnical Engineer).

B38 STABILIZATION FILL - a fill mass, the configuration of which is typically related to slope height and is specified by the standards of practice for enhancing the stability of locally adverse conditions. A stabilization fill is normally specified by minimum key width and depth and by maximum backcut angle. A stabilization fill may or may not have a backdrain system specified.

B39 SUBDRAIN - generally a pipe and gravel or similar drainage system placed beneath a fill in the alignment of canyons or former drainage channels.

B40 SLOUGH - loose, noncompacted fill material generated during grading operations.

B41 TAILINGS - non-engineered fill which accumulates on or adjacent to equipment haul-roads.

B42 TERRACE - relatively level step constructed in the face of a graded slope surface for drainage control and maintenance purposes.

B43 TOPSOIL - the presumably fertile upper zone of soil which is usually darker in color and loose.

B44 WINDROW - a string of large rock buried within engineered fill in accordance with guidelines set forth by the Geotechnical Consultant.

C. **OBLIGATIONS OF PARTIES**

C1 The Geotechnical Consultant should provide observation and testing services and should make evaluations to advise the Client on geotechnical matters. The geotechnical Consultant should report his findings and recommendations to the Client or his authorized representative.

C2 The Client should be chiefly responsible for all aspects of the project. He or his authorized representative has the responsibility of reviewing the findings and recommendations of the Geotechnical Consultant. He shall authorize or cause to have authorized the Contractor and/or other consultants to perform work and/or provide services. During grading the Client or his authorized representative should remain on-site or should remain reasonably accessible to all concerned parties in order to make decisions necessary to maintain the flow of the project.

C3 The Contractor should be responsible for the safety of the project and satisfactory completion of all grading and other associated operations on construction projects, including, but not limited to, earth work in accordance with the project plans, specifications and controlling agency requirements. During grading, the Contractor or his authorized representative should remain on-site. Overnight and on days off, the Contractor should remain accessible.

D. SITE PREPARATION

D1 The Client, prior to any site preparation or grading, should arrange and attend a meeting among the Grading Contractor, the Design Engineer, the Geotechnical Consultant, representatives of the appropriate governing authorities as well as any other concerned parties. All parties should be given at least 48 hours notice.

D2 Clearing and grubbing should consist of the removal of vegetation such as brush, grass, woods, stumps, trees, roots of trees and otherwise deleterious natural materials from the areas to be graded. Clearing and grubbing should extend to the outside of all proposed excavation and fill areas.

D3 Demolition should include removal of buildings, structures, foundations, reservoirs, utilities (including underground pipelines, septic tanks, leach fields, seepage pits, cisterns, mining shafts, tunnels, etc.) and other man-made surface and subsurface improvements from the areas to be graded. Demolition of utilities should include proper capping and/or rerouting pipelines at the project perimeter and cutoff and capping of wells in accordance with the requirements of the governing authorities and the recommendations of the Geotechnical Consultant at the time of demolition.

D4 Trees, plants or man-made improvements not planned to be removed or demolished should be protected by the Contractor from damage.

D5 Debris generated during clearing, grubbing and/or demolition operations should be wasted from areas to be graded and disposed off-site. Clearing, grubbing and demolition operations should be performed under the observation of the Geotechnical Consultant.

D6 The Client or Contractor should obtain the required approvals from the controlling authorities for the project prior, during and/or after demolition, site preparation and removals, etc. The appropriate approvals should be obtained prior to proceeding with grading operations.

E SITE PROTECTION

EI Protection of the site during the period of grading should be the responsibility of the Contractor. Unless other provisions are made in writing and agreed upon among the concerned parties, completion of a portion of the project should not be considered to preclude that portion or adjacent areas from the requirements for site protection until such time as the entire project is complete as identified by the Geotechnical Consultant, the Client and the regulating agencies.

E2 The Contractor should be responsible for the stability of all temporary excavations. Recommendations by the Geotechnical Consultant pertaining to temporary excavations (e.g., backcuts) are made in consideration of stability of the completed project and, therefore, should not be considered to preclude the responsibilities of the Contractor. Recommendations by the Geotechnical Consultant should not be considered to preclude more restrictive requirements by the regulating agencies.

E3 Precautions should be taken during the performance of site clearing, excavations and grading to protect the work site from flooding, ponding or inundation by poor or improper surface drainage. Temporary provisions should be made during the rainy season to adequately direct surface drainage away from and off the work site. Where low areas cannot be avoided, pumps should be kept on hand to continually remove water during periods of rainfall.

E4 During periods of rainfall, plastic sheeting should be kept reasonably accessible to prevent unprotected slopes from becoming saturated. Where necessary during periods of rainfall, the Contractor should install checkdams, desilting basins, rip-rap, sand bags or other devices or methods necessary to control erosion and provide safe conditions.

E5 During periods of rainfall, the Geotechnical Consultant should be kept informed by the Contractor as to the nature of remedial or preventative work being performed (e.g., pumping, placement of sandbags or plastic sheeting, other labor, dozing, etc.).

E6 Following periods of rainfall, the Contractor should contact the Geotechnical Consultant and arrange a walkover of the site in order to visually assess rain related damage. The Geotechnical Consultant may also recommend excavations and testing in order to aid in his assessments. At the request of the Geotechnical Consultant, the Contractor shall make excavations in order to evaluate the extent of rain related-damage.

E7 Rain-related damage should be considered to include, but may not be limited to, erosion, silting, saturation, swelling, structural distress and other adverse conditions identified by the Geotechnical Consultant. Soil adversely affected should be classified as Unsuitable Materials and should be subject to overexcavation and replacement with compacted fill or other remedial grading as recommended by the Geotechnical Consultant.

E8 Relatively level areas, where saturated soils and/or erosion gullies exist to depths of greater than 1.0 foot, should be overexcavated to unaffected, competent material. Where less than 1.0 foot in depth, unsuitable materials may be processed in-place to achieve near-optimum moisture conditions, then thoroughly recompacted in accordance with the applicable specifications. If the desired results are not achieved, the affected materials should be overexcavated, then replaced in accordance with the applicable specifications.

E9 In slope areas, where saturated soil and/or erosion gullies exist to depths of greater than 1.0 foot, they should be overexcavated and replaced as compacted fill in accordance with the applicable specifications. Where affected materials exist to depths of 1.0 foot or less below proposed finished grade, remedial grading by moisture conditioning in-place, followed by thorough recompaction in accordance with the applicable grading guidelines herein may be attempted. If the desired results are not achieved, all affected materials should be overexcavated and replaced as compacted fill in accordance with the slope repair recommendations herein. As field conditions dictate, other slope repair procedures may be recommended by the Geotechnical Consultant.

F. EXCAVATIONS

F1 UNSUITABLE MATERIALS

F1.1 Materials which are unsuitable should be excavated under observation and recommendations of the Geotechnical Consultant. Unsuitable materials include, but may not be limited to, dry, loose, soft, wet, organic compressible natural soils and fractured, weathered, soft bedrock and nonengineered or otherwise deleterious fill materials.

F1.2 Material identified by the Geotechnical Consultant as unsatisfactory due to it's moisture condition should be overexcavated, watered or dried, as needed, and thoroughly blended to a uniform near optimum moisture condition prior to placement as compacted fill.

F2 CUT SLOPES

F2.1 Unless otherwise recommended by the Geotechnical Consultant and approved by the regulating agencies, permanent cut slopes should not be steeper than 2:1 (horizontal: vertical).

F2.2 If excavations for cut slopes expose loose, cohesionless, significantly fractured or otherwise unsuitable material, overexcavation and replacement of the unsuitable materials with a compacted stabilization fill should be accomplished as recommended by the Geotechnical Consultant. Unless otherwise specified by the Geotechnical Consultant, stabilization fill construction should conform to the requirements of the Standard Details.

F2.3 The Geotechnical Consultant should review cut slopes during excavation. The Geotechnical Consultant should be notified by the contractor prior to beginning slope excavations.

F2.4 If, during the course of grading, adverse or potentially adverse geotechnical conditions are encountered which were not anticipated in the preliminary report, the Geotechnical Consultant should explore, analyze and make recommendations to treat these problems.

F2.5 When cut slopes are made in the direction of the prevailing drainage, a non-erodible diversion swale (brow ditch) should be provided at the top-of-cut.

F3 PAD AREAS

F3.1 All lot pad areas, including side yard terraces, above stabilization fill or buttresses should be overexcavated to provide for a minimum of 3 feet (refer to Standard Details) of compacted fill over the entire pad area. Pad areas with both fill and cut materials exposed and pad areas containing both very shallow (less than 3 feet) and deeper fill should be overexcavated to provide for a uniform compacted fill blanket with a minimum of 3 feet in thickness (refer to Standard Details). Cut areas exposing significantly varying material types should also be overexcavated to provide for at least a 3-foot thick compacted fill blanket. Geotechnical conditions may require greater depth of overexcavation. The actual depth should be delineated by the Geotechnical Consultant during grading.

F3.2 For pad areas created above cut or natural slopes, positive drainage should be established away from the top-of-slope. This may be accomplished utilizing a berm and/or an appropriate pad gradient. A gradient in soil areas away from the top-of-slopes of 2 percent or greater is recommended.

G. COMPACTED FILL

All fill materials should be compacted as specified below or by other methods specifically recommended by the Geotechnical Consultant. Unless otherwise specified, the minimum degree of compaction (relative compaction) should be 90 percent of the laboratory maximum density.

G1 PLACEMENT

G1.1 Prior to placement of compacted fill, the Contractor should request a review by the Geotechnical Consultant of the exposed ground surface. Unless otherwise recommended, the exposed ground surface should then be scarified (six inches minimum), watered or dried as needed, thoroughly blended to achieve near optimum moisture conditions, then thoroughly compacted to a minimum of 90 percent of the maximum density. The review by the Geotechnical Consultant should not be considered to preclude requirement of inspection and approval by the governing agency.

G1.2 Compacted fill should be placed in thin horizontal lifts not exceeding eight inches in loose thickness prior to compaction. Each lift should be watered or dried as needed, thoroughly blended to achieve near optimum moisture conditions then thoroughly compacted by mechanical methods to a minimum of 90 percent of laboratory maximum dry density. Each lift should be treated in a like manner until the desired finished grades are achieved.

G1.3 The Contractor should have suitable and sufficient mechanical compaction equipment and watering apparatus on the job site to handle the amount of fill being placed in consideration of moisture retention properties of the materials. If necessary, excavation equipment should be "shut down" temporarily in order to permit proper compaction of fills. Earth moving equipment should only be considered a supplement and not substituted for conventional compaction equipment.

G1.4 When placing fill in horizontal lifts adjacent to areas sloping steeper than 5:1 (horizontal: vertical), horizontal keys and vertical benches should be excavated into the adjacent slope area. Keying and benching should be sufficient to provide at least six-foot wide benches and a minimum of four feet of vertical bench height within the firm natural ground, firm bedrock or engineered compacted fill. No compacted fill should be placed in an area subsequent to keying and benching until the area has been reviewed by the Geotechnical Consultant. Material generated by the benching operation should be moved sufficiently away from the bench area to allow for the recommended review of the horizontal bench prior to placement of fill. Typical keying and benching details have been included within the accompanying Standard Details.

G1.5 Within a single fill area where grading procedures dictate two or more separate fills, temporary slopes (false slopes) may be created. When placing fill adjacent to a false slope, benching should be conducted in the same manner as above described. At least a 3-foot vertical bench should be established within the firm core of adjacent approved compacted fill prior to placement of additional fill. Benching should proceed in at least 3-foot vertical increments until the desired finished grades are achieved.

G1.6 Fill should be tested for compliance with the recommended relative compaction and moisture conditions. Field density testing should conform to ASTM Method of Test D1556-64, D2922-78 and/or D2937-71. Tests should be provided for about every two vertical feet or 1,000 cubic yards of fill placed. Actual test interval may vary as field conditions dictate. Fill found not to be in conformance with the grading recommendations should be removed or otherwise handled as recommended by the Geotechnical Consultant.

G1.7 The Contractor should assist the Geotechnical Consultant and/or his representative by digging test pits for removal determinations and/or for testing compacted fill.

G1.8 As recommended by the Geotechnical Consultant, the Contractor should "shut down" or remove grading equipment from an area being tested.

G1.9 The Geotechnical Consultant should maintain a plan with estimated locations of field tests. Unless the client provides for actual surveying of test locations, the estimated locations by the Geotechnical Consultant should only be considered rough estimates and should not be utilized for the purpose of preparing cross sections showing test locations or in any case for the purpose of after-the-fact evaluating of the sequence of fill placement.

G2 MOISTURE

G2.1 For field testing purposes, "near optimum" moisture will vary with material type and other factors including compaction procedure. "Near optimum" may be specifically recommended in Preliminary Investigation Reports and/or may be evaluated during grading. As a preliminary guideline "near optimum" should be considered from one percent below to three percent above optimum.

G2.2 Prior to placement of additional compacted fill following an overnight or other grading delay, the exposed surface or previously compacted fill should be processed by scarification, watered or dried as needed, thoroughly blended to near-optimum moisture conditions, then recompacted to a minimum of 90 percent of laboratory maximum dry density. Where wet or other dry or other unsuitable materials exist to depths of greater than one foot, the unsuitable materials should be over excavated.

G2.3 Following a period of flooding, rainfall or overwatering by other means, no additional fill should be placed until damage assessments have been made and remedial grading performed as described under Section E6 herein.

G3 FILL MATERIAL

G3.1 Excavated on-site materials which are acceptable to the Geotechnical Consultant may be utilized as compacted fill, provided trash, vegetation and other deleterious materials are removed prior to placement.

G3.2 Where import materials are required for use on-site, the Geotechnical Consultant should be notified at least 72 hours in advance of importing, in order to sample and test materials from proposed borrow sites. No import materials should be delivered for use on-site without prior sampling and testing by the Geotechnical Consultant.

G3.3 Where oversized rock or similar irreducible material is generated during grading, it is recommended, where practical, to waste such material off-site or on-site in areas designated as "nonstructural rock disposal areas". Rock placed in disposal areas should be placed with sufficient fines to fill voids. The rock should be compacted in lifts to an unyielding condition. The disposal area should be covered with at least three feet of compacted fill which is free of oversized material. The upper three feet should be placed in accordance with the guidelines for compacted fill herein.

G3.4 Rocks 12 inches in maximum dimension and smaller may be utilized within the compacted fill, provided they are placed in such a manner that nesting of the rock is avoided. Fill should be placed and thoroughly compacted over and around all rock. The amount of rock should not exceed 40 percent by dry weight passing the 3/4-inch sieve size. The 12-inch and 40 percent recommendations herein may vary as field conditions dictate.

G3.5 During the course of grading operations, rocks or similar irreducible materials greater than 12 inches maximum dimension (oversized material), may be generated. These rocks should not be placed within the compacted fill unless placed as recommended by the Geotechnical Consultant.

G3.6 Where rocks or similar irreducible materials of greater than 12 inches but less than four feet of maximum dimension are generated during grading, or otherwise desired to be placed within an engineered fill, special handling in accordance with the accompanying Standard Details is recommended. Rocks greater than four feet should be broken down or disposed off-site. Rocks up to four feet maximum dimension should not be placed in the upper 10 feet of any fill and should not be closer than 20 feet to any slope face. These recommendations could vary as locations of improvements dictate.

Where practical, oversized material should not be placed below areas where structures or deep utilities are proposed. Oversized material should be placed in windrows on a clean, overexcavated or unyielding compacted fill or firm natural ground surface. Select native or imported granular soil (S.E. 30 or higher) should be placed and thoroughly flooded over and around all windrowed rock, such that voids are filled. Windrows of oversized material should be staggered so that successive strata of oversized material are not in the same vertical plane.

The Contractor should be aware that the placement of rock in windrows will significantly slow the grading operation and may require additional equipment and/or special equipment.

G3.7 It may be possible to dispose of individual larger rock as field conditions dictate and as recommended by the Geotechnical Consultant at the time of placement.

G3.8 Material that is considered unsuitable by the Geotechnical Consultant should not be utilized in the compacted fill.

G3.9 During grading operations, placing and mixing the materials from the cut and/or borrow areas may result in soil mixtures which possess unique physical properties. Testing may be required of samples obtained directly from the fill areas in order to verify conformance with the specifications. Processing of these additional samples may take two or more working days. The contractor may elect to move the operation to other areas within the project, or may continue placing compacted fill pending laboratory and field test results. Should he elect the second alternative, fill placed is done so at the Contractor's risk.

G3.10 Any fill placed in areas not previously reviewed and evaluated by the Geotechnical Consultant, and/or in other areas, without prior notification to the Geotechnical Consultant may require removal and recompaction at the Contractor's expense. Determination of overexcavations should be made upon review of field conditions by the Geotechnical Consultant.

G4 FILL SLOPES

G4.1 Unless otherwise recommended by the Geotechnical Consultant and approved by the regulating agencies, permanent fill slopes should not be steeper than 2:1 (horizontal: vertical).

G4.2 Except as specifically recommended otherwise or as otherwise provided for in these grading guidelines (Reference G4.3), compacted fill slopes should be overbuilt and cut back to grade, exposing the firm, compacted fill inner core. The actual amount of overbuilding may vary as field conditions dictate. If the desired results are not achieved, the existing slopes should be overexcavated and reconstructed under the guidelines of the Geotechnical Consultant. The degree of overbuilding shall be increased until the desired compacted slope surface condition is achieved. Care should be taken by the Contractor to provide thorough mechanical compaction to the outer edge of the overbuilt slope surface.

G4.3 Although no construction procedure produces a slope free from risk of future movement, overfilling and cutting back of slope to a compacted inner core is, given no other constraints, the most desirable procedure. Other constraints, however, must often be considered. These constraints may include property line situations, access, the critical nature of the development and cost. Where such constraints are identified, slope face compaction on slopes of 2:1 or flatter may be attempted as a second-best alternative by conventional construction procedures including backrolling techniques upon specific recommendation by the Geotechnical Consultant.

Fill placement should proceed in thin lifts, (i.e., six to eight-inch loose thickness). Each lift should be moisture conditioned and thoroughly compacted. The desired moisture condition should be maintained and/or re-established, where necessary, during the period between successive lifts. Selected lifts should be tested to ascertain that desired compaction is being achieved. Care should be taken to extend compactive effort to the outer edge of the slope.

Each lift should extend horizontally to the desired finished slope surface or more as needed to ultimately establish desired grades. Grade during construction should not be allowed to roll off at the edge of the slope. It may be helpful to elevate slightly the outer edge of the slope. Slough resulting from the placement of individual lifts should not be allowed to drift down over previous lifts. At intervals not exceeding four feet in vertical slope height or the capability of available equipment, whichever is less, fill slopes should be thoroughly backrolled utilizing a conventional sheepsfoot-type roller. Care should be taken to maintain the desired moisture conditions and/or reestablishing same as needed prior to backrolling. Upon achieving final grade, the slopes should again be moisture conditioned and thoroughly backrolled. The use of a side-boom roller will probably be necessary and vibratory methods are strongly recommended. Without delay, so as to avoid (if possible) further moisture conditioning, the slopes should then be grid-rolled to achieve a relatively smooth surface and uniformly compact condition.

In order to monitor slope construction procedures, moisture and density tests should be taken at regular intervals. Failure to achieve the desired results will likely result in a recommendation by the Geotechnical Consultant to overexcavate the slope surfaces followed by reconstruction of the slopes utilizing over-filling and cutting back procedures and/or further attempt at the conventional backrolling approach. Other recommendations may also be provided which would be commensurate with field conditions.

G4.4 Where placement of fill above a natural slope or above a cut slope is proposed, the fill slope configuration as presented in the accompanying Standard Details should be adopted.

G4.5 For pad areas above fill slopes, positive drainage should be established away from the top-of-slope. This may be accomplished utilizing a berm and pad gradients of at least 2 percent in soil areas.

G5 OFF-SITE FILL

G5.1 Off-site fill should be treated in the same manner as recommended in these specifications for site preparation, excavation, drains, compaction, etc.

G5.2 Off-site canyon fill should be placed in preparation for future additional fill, as shown in the accompanying Standard Details.

G5.3 Off-site fill subdrains temporarily terminated (up canyon) should be surveyed for future relocation and connection.

H. DRAINAGE

H1 Canyon subdrain systems specified by the Geotechnical Consultant should be installed in accordance with the Standard Details.

H2 Typical subdrains for compacted fill buttresses, slope stabilizations or sidehill masses, should be installed in accordance with the specifications of the accompanying Standard Details.

H3 Roof, pad and slope drainage should be directed away from slopes and areas of structures to suitable disposal areas via non-erodible devices (i.e., gutters, downspouts, concrete swales).

H4 For drainage over soil areas immediately away from structures, (i.e., within four feet) a minimum of 5 percent gradient should be maintained. Pad drainage of at least 2 percent should be maintained over soil areas.

H5 Drainage patterns established at the time of fine grading should be maintained throughout the life of the project. Property owners should be made aware that altering drainage patterns can be detrimental to slope stability and foundation performance.

I STAKING

I1 In all fill areas, the fill should be compacted prior to the placement of the stakes. This particularly is important on fill slopes. Slope stakes should not be placed until the slope is thoroughly compacted (backrolled). If stakes must be placed prior to the completion of compaction procedures, it must be recognized that they will be removed and/or demolished at such time as compaction procedures resume.

12 In order to allow for remedial grading operations, which could include overexcavations or slope stabilization, appropriate staking offsets should be provided. For finished slope and stabilization backcut areas, we recommend at least a 10-foot setback from proposed toes and tops-of-cut.

J. MAINTENANCE

J1 LANDSCAPE PLANTS

In order to enhance surficial slope stability, slope planting should be accomplished at the completion of grading. Slope planting should consist of deep-rooting vegetation requiring little watering. Plants native to the southern California area and plants relative to native plants are generally desirable. Plants native to other semi-arid and arid areas may also be appropriate. A Landscape Architect would be the best party to consult regarding actual types of plants and planting configuration.

J2 IRRIGATION

J2.1 Irrigation pipes should be anchored to slope faces, not placed in trenches excavated into slope faces.

J2.2 Slope irrigation should be minimized. If automatic timing devices are utilized on irrigation systems, provisions should be made for interrupting normal irrigation during periods of rainfall.

J2.3 Though not a requirement, consideration should be given to the installation of near-surface moisture monitoring control devices. Such devices can aid in the maintenance of relatively uniform and reasonably constant moisture conditions.

J2.4 Property owners should be made aware that overwatering of slopes is detrimental to slope stability.

J3 MAINTENANCE

J3.1 Periodic inspections of landscaped slope areas should be planned and appropriate measures should be taken to control weeds and enhance growth of the landscape plants. Some areas may require occasional replanting and/or reseeding.

J3.2 Terrace drains and downdrains should be periodically inspected and maintained free of debris. Damage to drainage improvements should be repaired immediately.

J3.3 Property owners should be made aware that burrowing animals can be detrimental to slope stability. A preventative program should be established to control burrowing animals.

J3.4 As a precautionary measure, plastic sheeting should be readily available, or kept on hand, to protect all slope areas from saturation by periods of heavy or prolonged rainfall. This measure is strongly recommended, beginning with the period of time prior to landscape planting.

J4 REPAIRS

J4.1 If slope failures occur, the Geotechnical Consultant should be contacted for a field review of site conditions and development of recommendations for evaluation and repair.

J4.2 If slope failures occur as a result of exposure to periods of heavy rainfall, the failure area and currently unaffected areas should be covered with plastic sheeting to protect against additional saturation.

J4.3 In the accompanying Standard Details, appropriate repair procedures are illustrated for superficial slope failures (i.e., occurring typically within the outer one foot to three feet of a slope face).

K. TRENCH BACKFILL

K1 Utility trench backfill should, unless otherwise recommended, be compacted by mechanical means. Unless otherwise recommended, the degree of compaction should be a minimum of 90 percent of the laboratory maximum density.

K2 As an alternative, granular material (sand equivalent greater than 30) may be thoroughly jetted in-place. Jetting should only be considered to apply to trenches no greater than two feet in width and four feet in depth. Following jetting operations, trench backfill should be thoroughly mechanically compacted and/or wheel rolled from the surface.

K3 Backfill of exterior and interior trenches extending below a 1:1 projection from the outer edge of foundations should be mechanically compacted to a minimum of 90 percent of the laboratory maximum density.

K4 Within slab areas, but outside the influence of foundations, trenches up to one foot wide and two feet deep may be backfilled with sand and consolidated by jetting, flooding or by mechanical means. If on-site materials are utilized, they should be wheel-rolled, tamped or otherwise compacted to a firm condition. For minor interior trenches, density testing may be deleted or spot testing may be elected if deemed necessary, based on review of backfill operations during construction.

K5 If utility contractors indicate that it is undesirable to use compaction equipment in close proximity to a buried-conduit, the Contractor may elect the utilization of light weight mechanical compaction equipment and/or shading of the conduit with clean, granular material, which should be thoroughly jetted in-place above the conduit, prior to initiating mechanical compaction procedures. Other methods of utility trench compaction may also be appropriate, upon review by the Geotechnical Consultant at the time of-construction.

K6 In cases where clean granular materials are proposed for use in lieu of native materials or where flooding or jetting is proposed, the procedures should be considered subject to review by the Geotechnical Consultant.

K7 Clean granular backfill and/or bedding are not recommended in slope areas unless provisions are made for a drainage system to mitigate the potential build-up of seepage forces.

L STATUS OF GRADING

Prior to proceeding with any grading operation, the Geotechnical Consultant should be notified at least two working days in advance in order to schedule the necessary observation and testing services.

L1 Prior to any significant expansion or cut back in the grading operation, the Geotechnical Consultant should be provided with adequate notice (i.e., two days) in order to make appropriate adjustments in observation and testing services.

L2 Following completion of grading operations and/or between phases of a grading operation, the Geotechnical Consultant should be provided with at least two working days notice in advance of commencement of additional grading operations.

CANYON SUBDRAIN

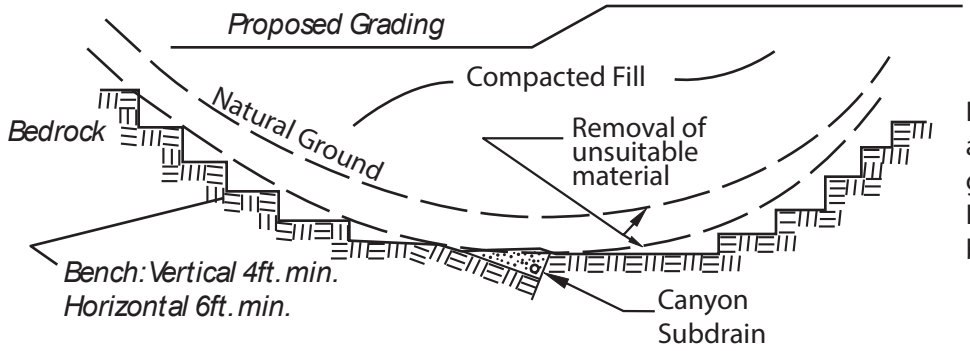

Drains along canyon walls as recommended by the geotechnical consultant. Install as - needed per buttress backdrain detail.

Dozer Trench

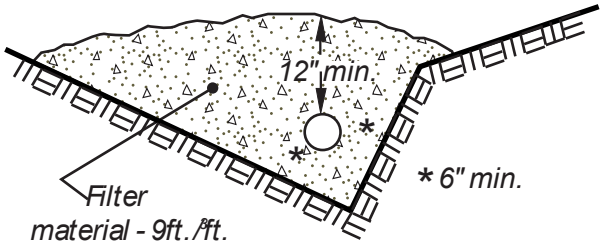

Geofabric Alternative

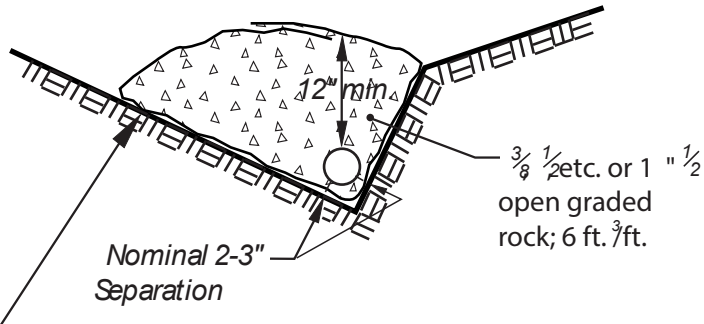

Backhoe Trench

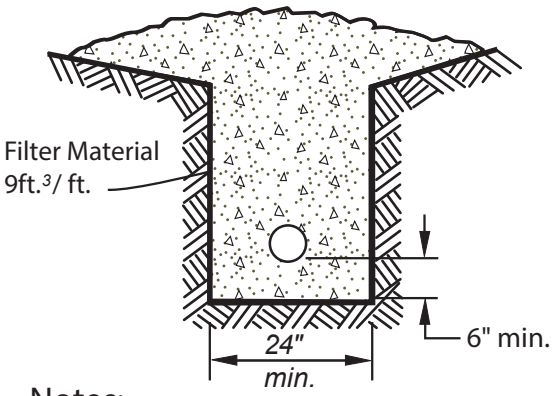

Geofabric Alternative

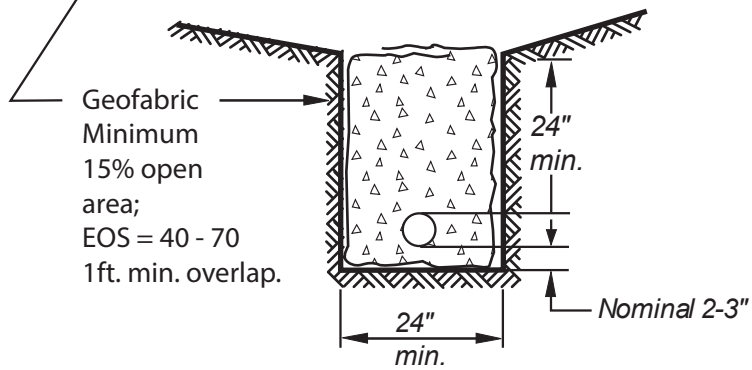

Notes:

1- Pipe be 4" min. diameter, 6" min. for runs of 500ft to 1000ft, 8" min. for runs of 1000ft. or greater.

2- Pipe should be schedule 40 PVC or similiar. Upstream ends should be capped.

3- Pipe should have 8 uniformly spaced 3/8" perforations per foot placed at 90° offset on underside of pipe. FInal 20 foot of pipe should be nonperforated.

4- Filter material should be Calif. Class 2 Permeable Material.

5- Appropriate gradient should be provided for drainage; 2% minimum is recommended.

6- For the Geofabric Alternatives and gradients of 4% or greater, pipe may be omitted from the upper 500ft. For runs of 500, 1000, and 1500ft or greater 4", 6", and 8" pipe, respectively, should be provided.

STANDARD DETAIL NO. 1

FILL OVER NATURAL SLOPE

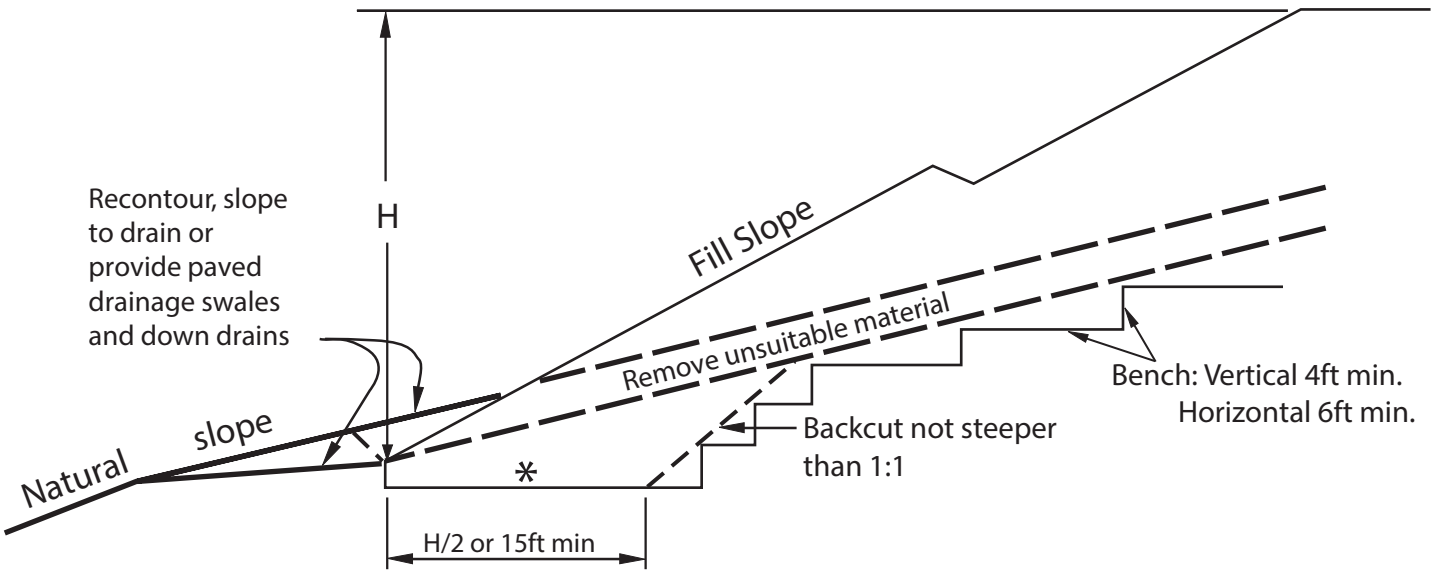

FILL OVER CUT SLOPE

* 2 ft. min. key depth at toe; tip key 1ft. nominal or 4% into slope

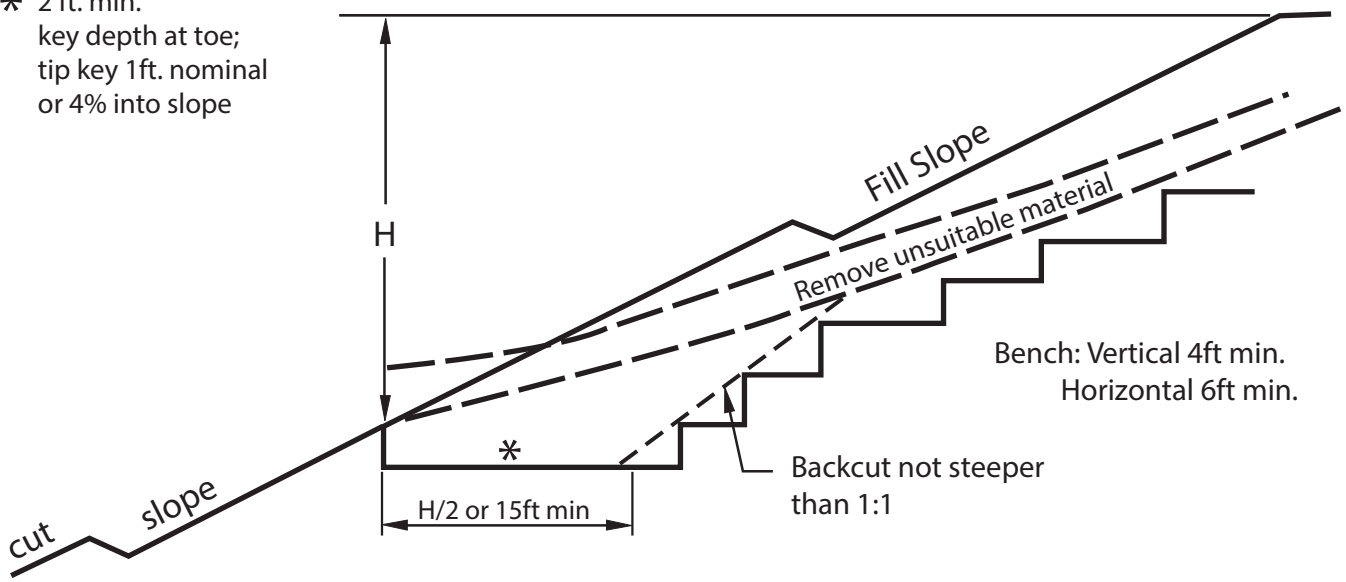

Notes:

1 - If overfilling and cutting back to grade is adopted, 15ft. min. fill width may be reduced to 12ft. min. In no case should the fill width be less than 1/2 the height of fill remaining.

2 - Backdrain as recommended by geotechnical consultant per buttress backdrain detail.

STANDARD DETAIL NO. 2

STABILIZATION FILL

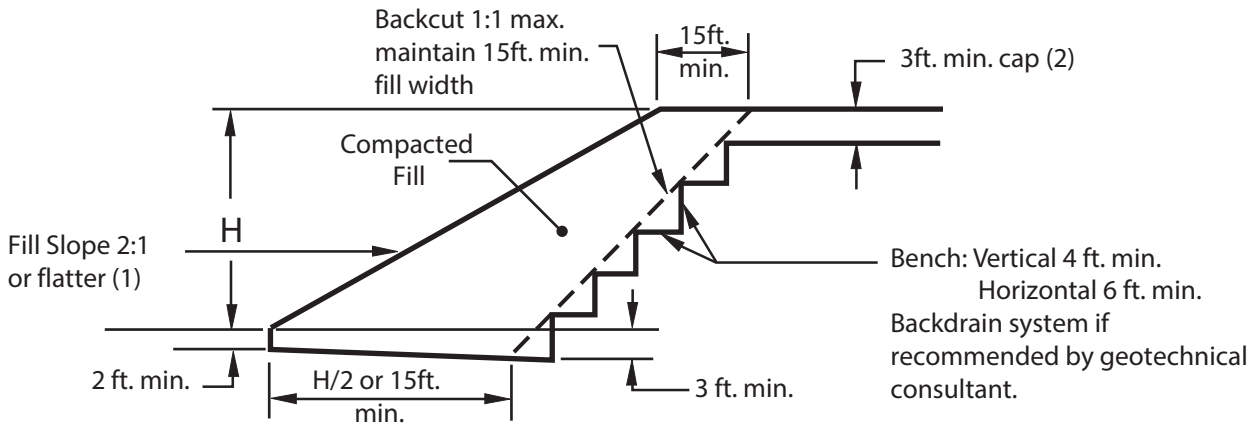

BUTTRESS FILL

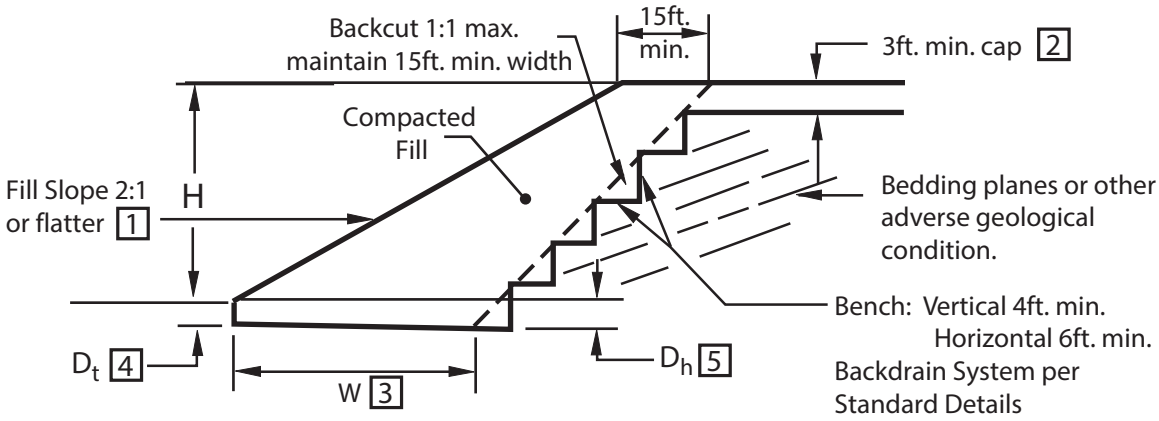

Notes:

1 - If overfilling and cutting back to grade is adopted, 15ft. may be reduced to 12ft. In no case should the fill width be less than 1/2 the fill height remaining.

2 - A 3ft. blanket fill shall be provided above stabilization and buttress fills. The thickness may be greater as recommended by the geotechnical consultant.

3 - W = designed width of key.

4 - D_t = designed depth of key at toe

5 - D_h = depth of key at heel; unless otherwise specified, $D_h = D_t + 1$ft.

STANDARD DETAIL NO. 3

STABILIZATION FILL

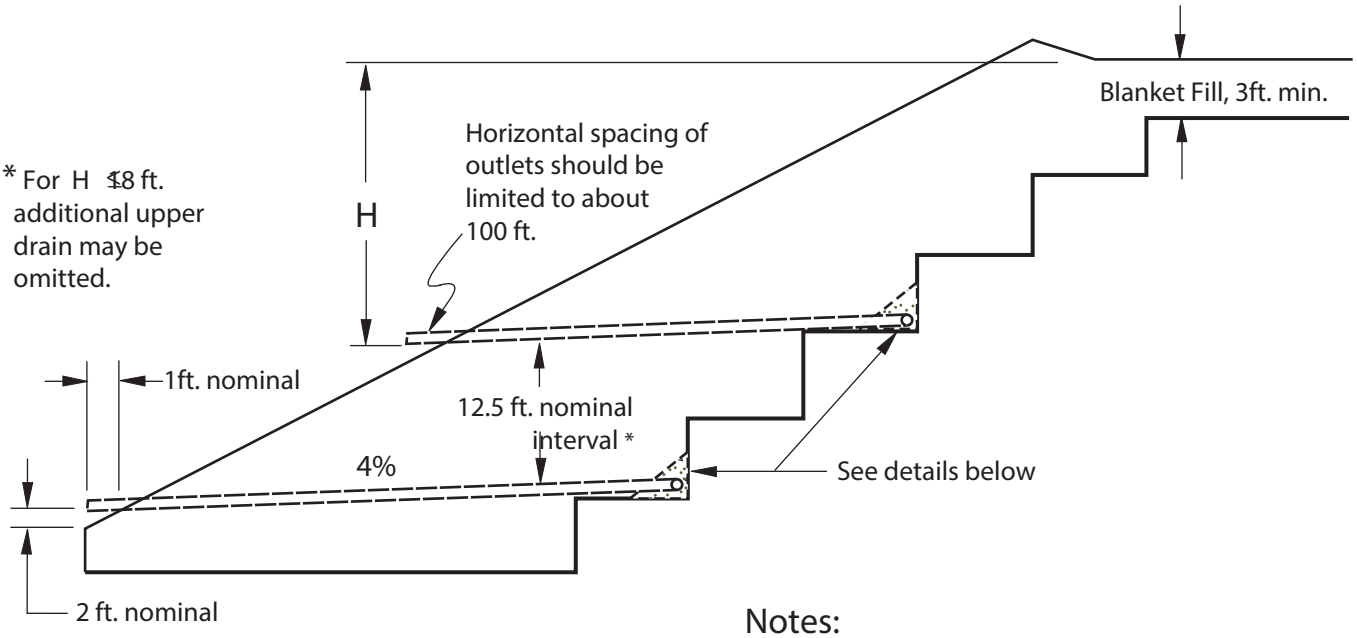

Conventional Backdrain

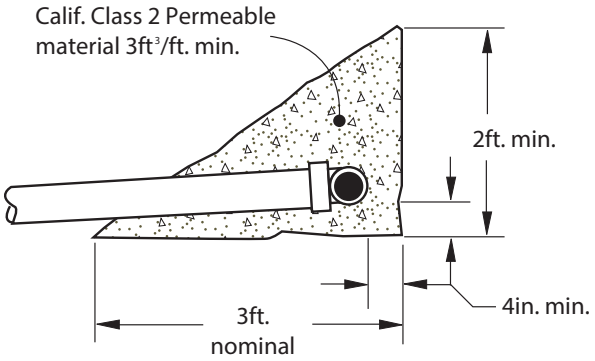

Geofrabic Alternative

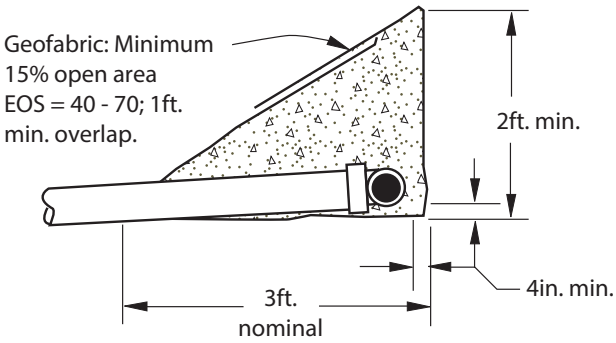

Clean, open graded rock; pea gravel 3/8, 1/2, 3/4 or 1-inch; 3ft³/ft. min.

Notes:

1 - Pipe should be 4 inch diameter Schedule 40 PVC or similiar.
2 - Gradients should be 4% or greater.
3 - Cap all upstream ends
4 - Trenches for outlet pipes should be backfilled with compacted native soil.
5 - Backdrain pipe should have 8 uniformly spaced perforations per foot placed 90° offset on underside of pipe. Outlet pipe should be nonperforated.
6 - For the geofrabric alternative the backdrain pipe may be omitted provided at least 20 feet (i.e. 10 ft each side of outlet) of perforated pipe is provided to lead into each outlet.
7 - At each outlet the geofabric should be appropriately overlapped (1ft.) at cuts in fabric or otherwise sealed or taped around the pipe.

STANDARD DETAIL NO. 4

FUTURE CANYON FILL

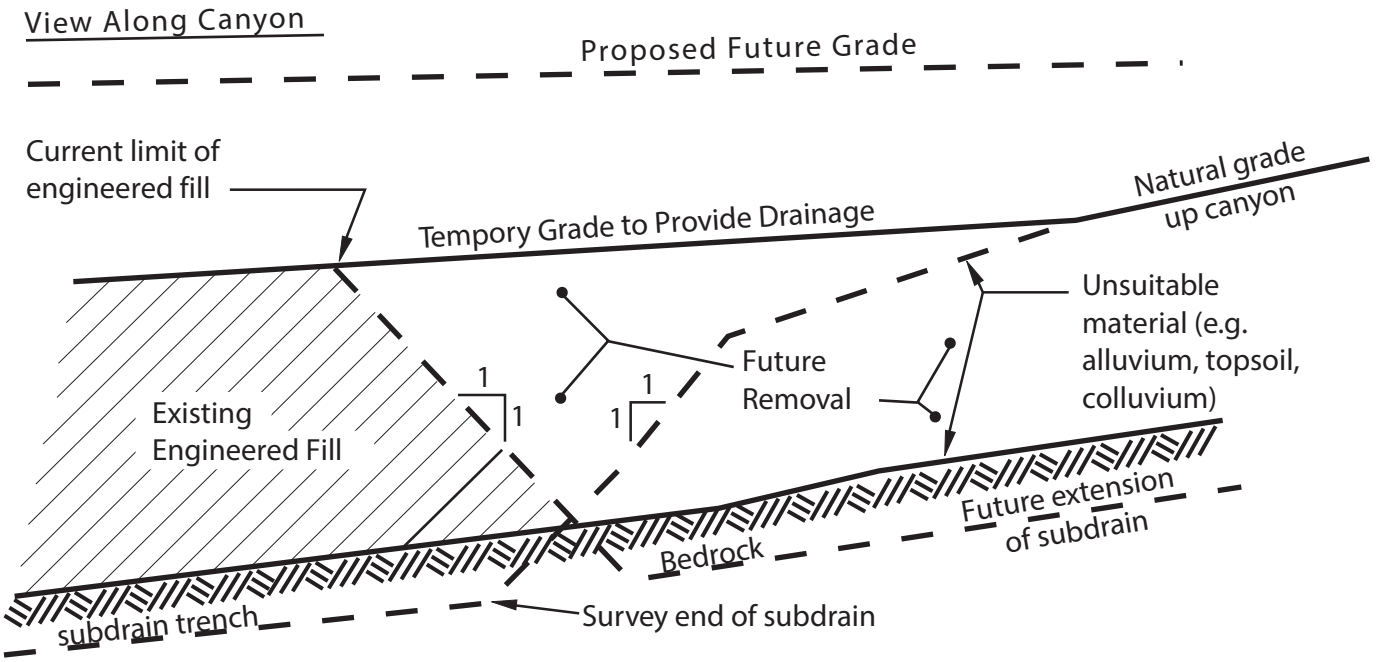

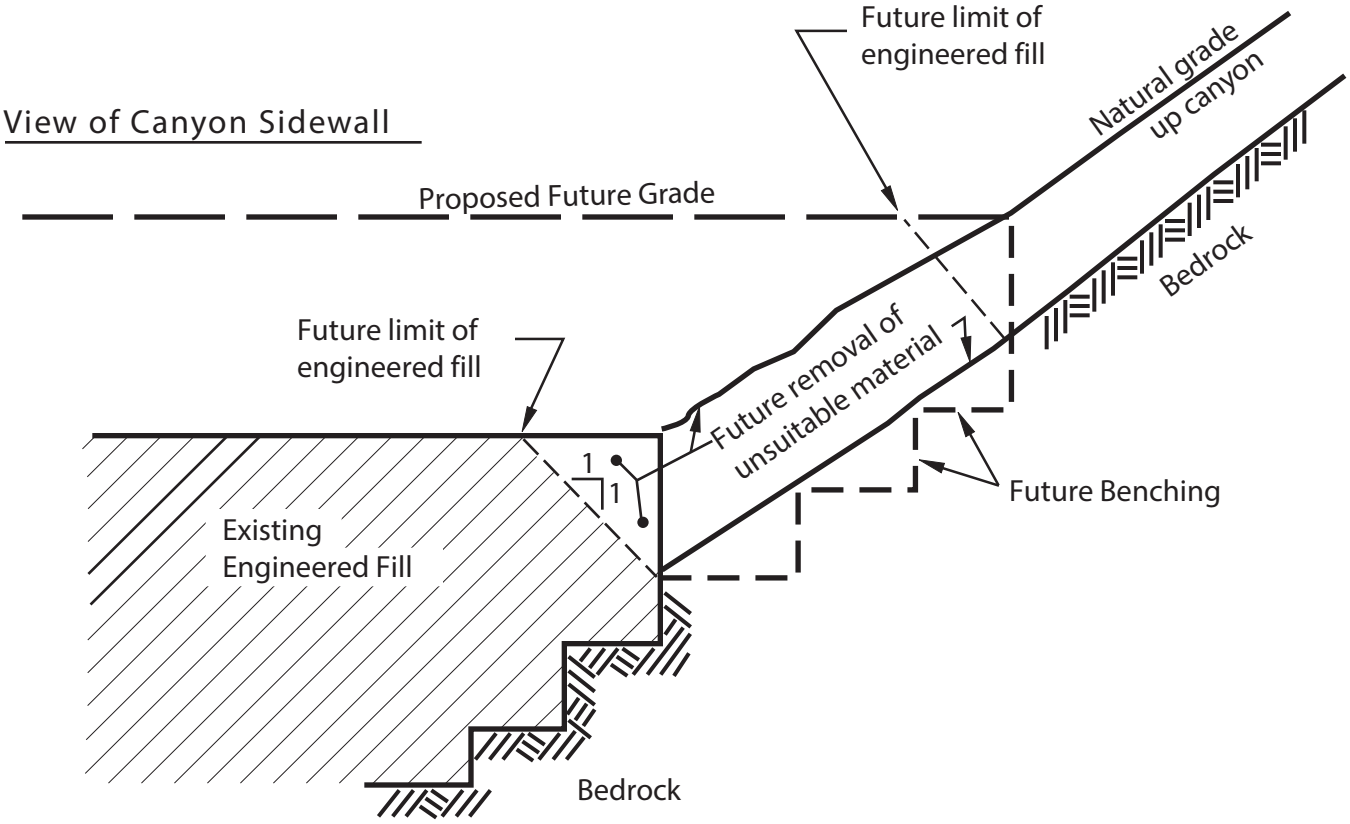

STANDARD DETAIL NO. 5

TRANSITION LOT OVER-EXCAVATION

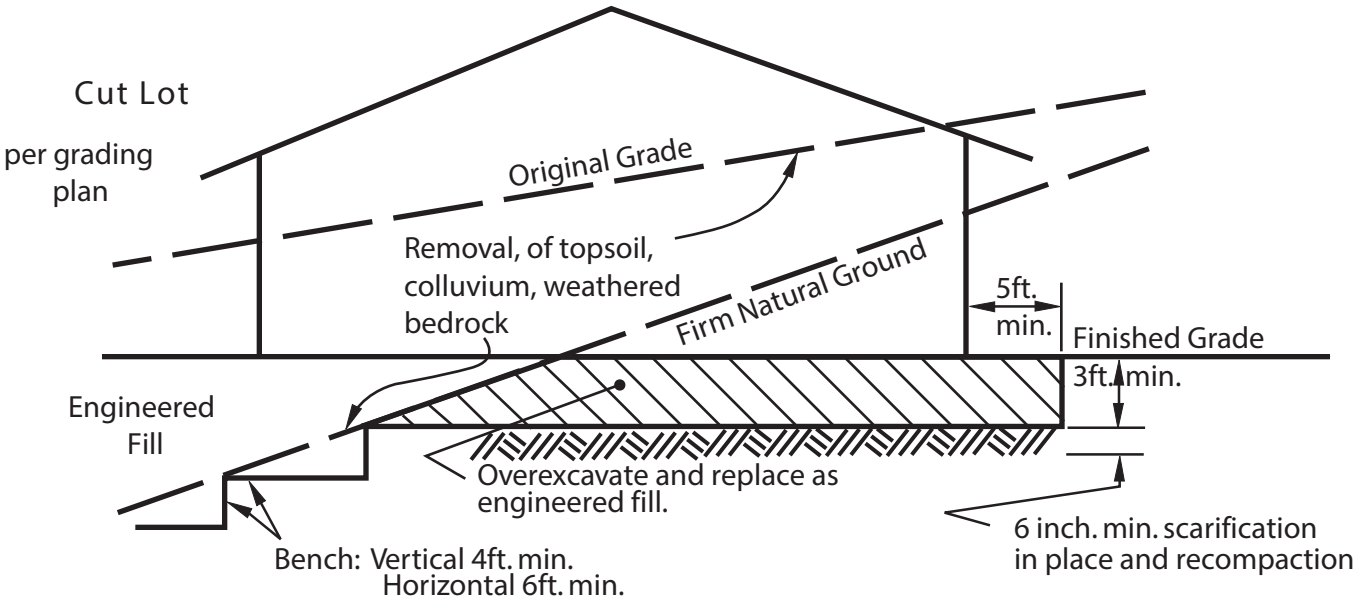

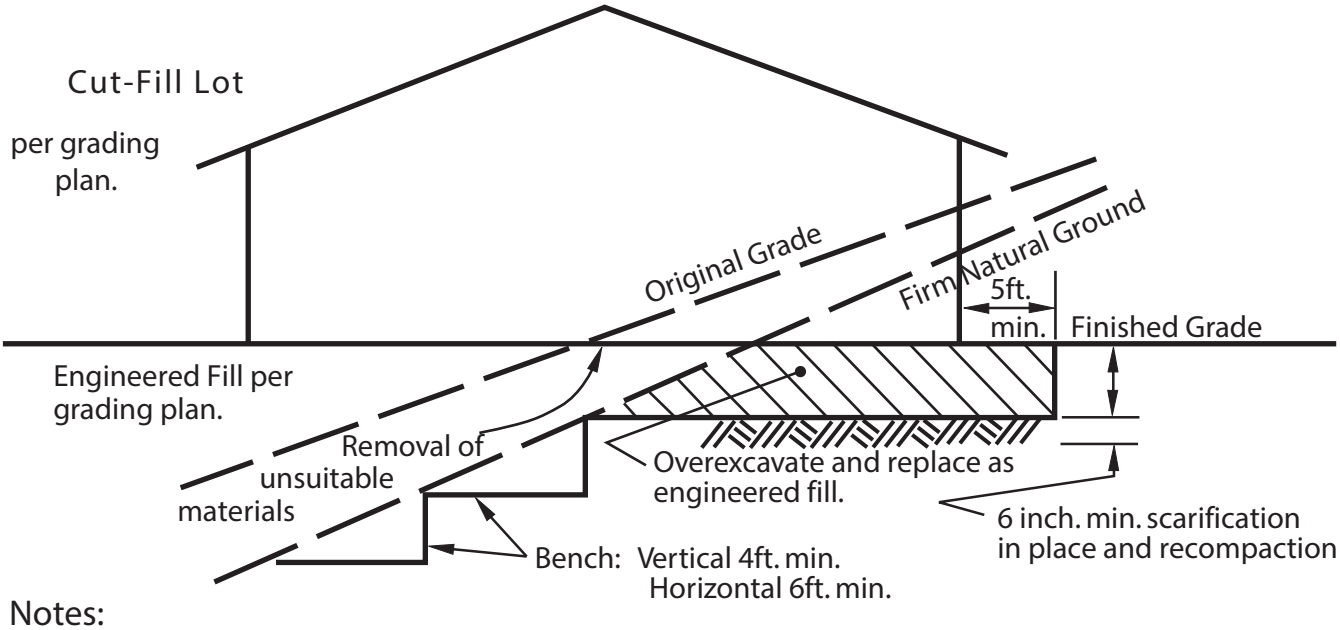

Notes:

1 - Topsoil, colluvium, weathered bedrock and otherwise unsuitable materials should be removed to firm natural ground as identified by the geotechnical consultant.

2 - The minimum depth of overexcavation should be considered subject to review by the geotechnical consultant. Steeper transitions may require deeper overexcavation.

3 - The lateral extent of overexcavation should be 5 feet minimum, but may include the entire lot as recommended by the geotechnical consultant.

4 - The contractor should notify the geotechnical consultant in advance of achieving final grades (i.e. within 5 ft.) in order to evaluate overexcavation recommendations. Additional staking may be requested to aid in the evaluation of overexcavations.

STANDARD DETAIL NO. 6

ROCK DISPOSAL

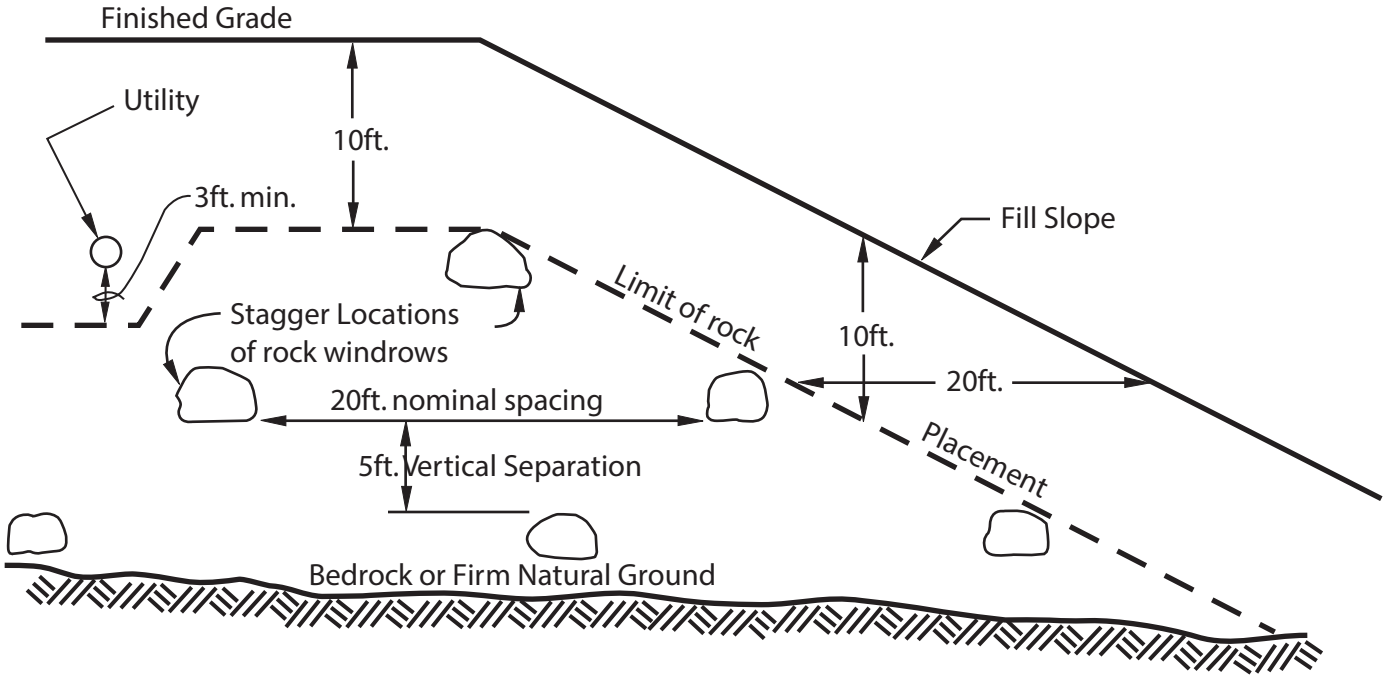

Windrow Section

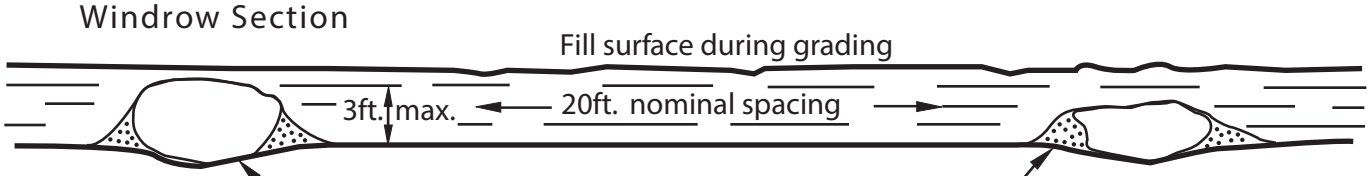

Dozer V-ditch or fill thoroughly compacted to a smooth unyielding condition (e.g. by wheel rolling.) Place rock on 3 to 6 inches granular as recommended for flooding *

* clean grandular material (S.E. ≥30) should be thoroughly flooded to fill voids around rock.

Windrow Profile

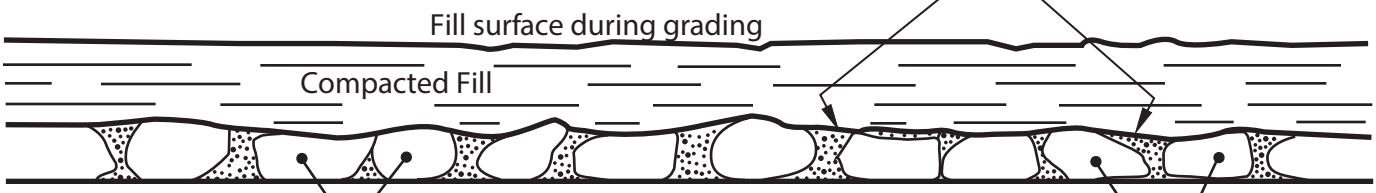

Rock should be placed end to end.
Rock should not be nested.

Notes:

1 - Following placement of rock, flooding of granular material, and placement of compacted fill adjacent to windrow, each windrow should be thoroughly compacted from the surface.
2 - The contractor should provide to the geotechnical consultant plans prepared by survey documenting the location of buried rock.
3 - Disposal in streets may be subject to more restrictive requirements by the governing authorities.

STANDARD DETAIL NO. 7

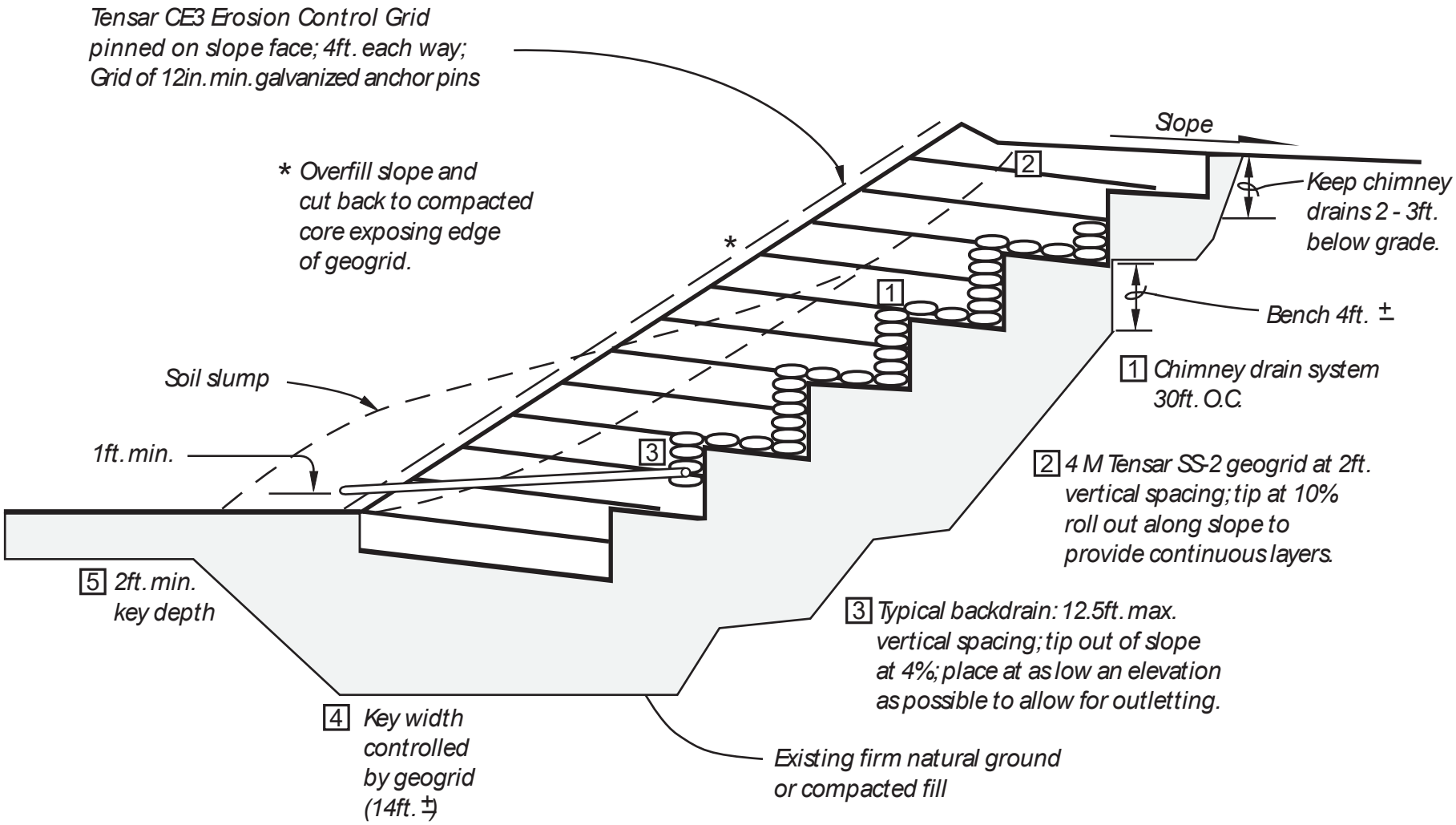

MINOR SLOPE REPAIR

STANDARD DETAIL NO. 8

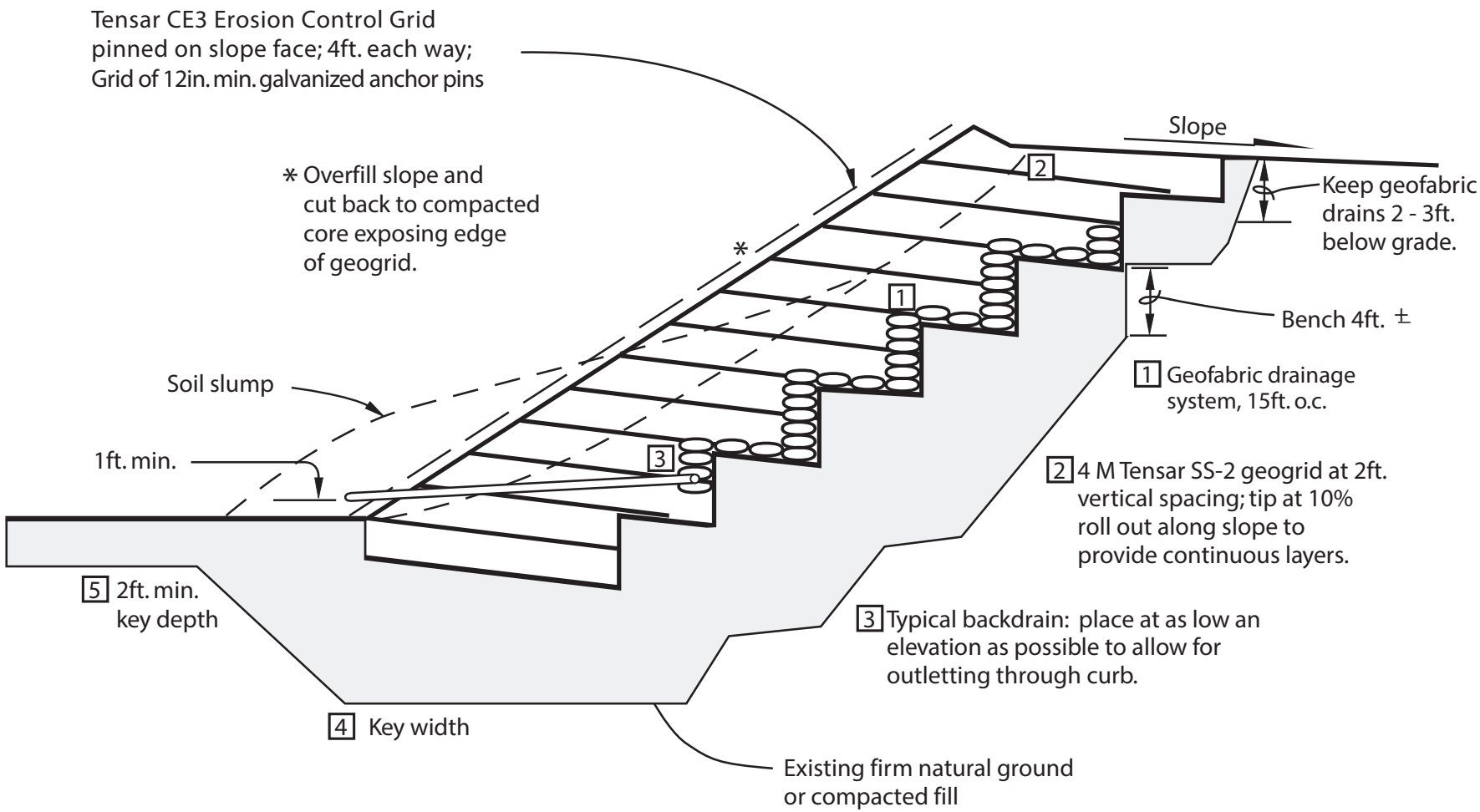

MINOR SLOPE REPAIR

STANDARD DETAIL NO. 8A

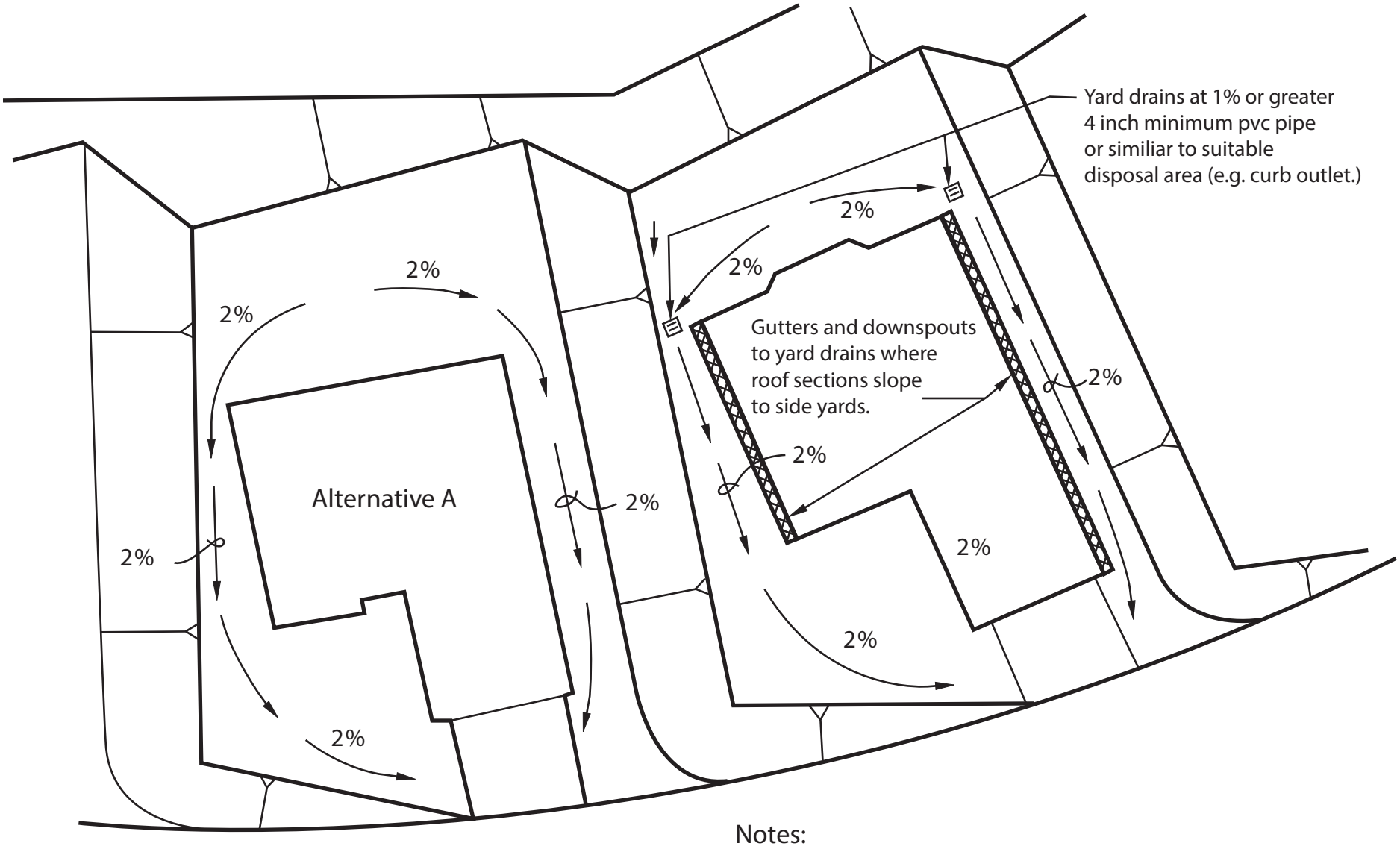

Notes:

1 - Drainage into swale areas should be at 2% gradient.
Directly away from buildings drainage should be at 5%.

LOT DRAINAGE

STANDARD DETAIL NO. 9

EXHIBIT B

Site Aerial and C&DMMP Form

EXHIBIT B - SITE AERIAL

P2021 - NHP POOL PUMP ROOM

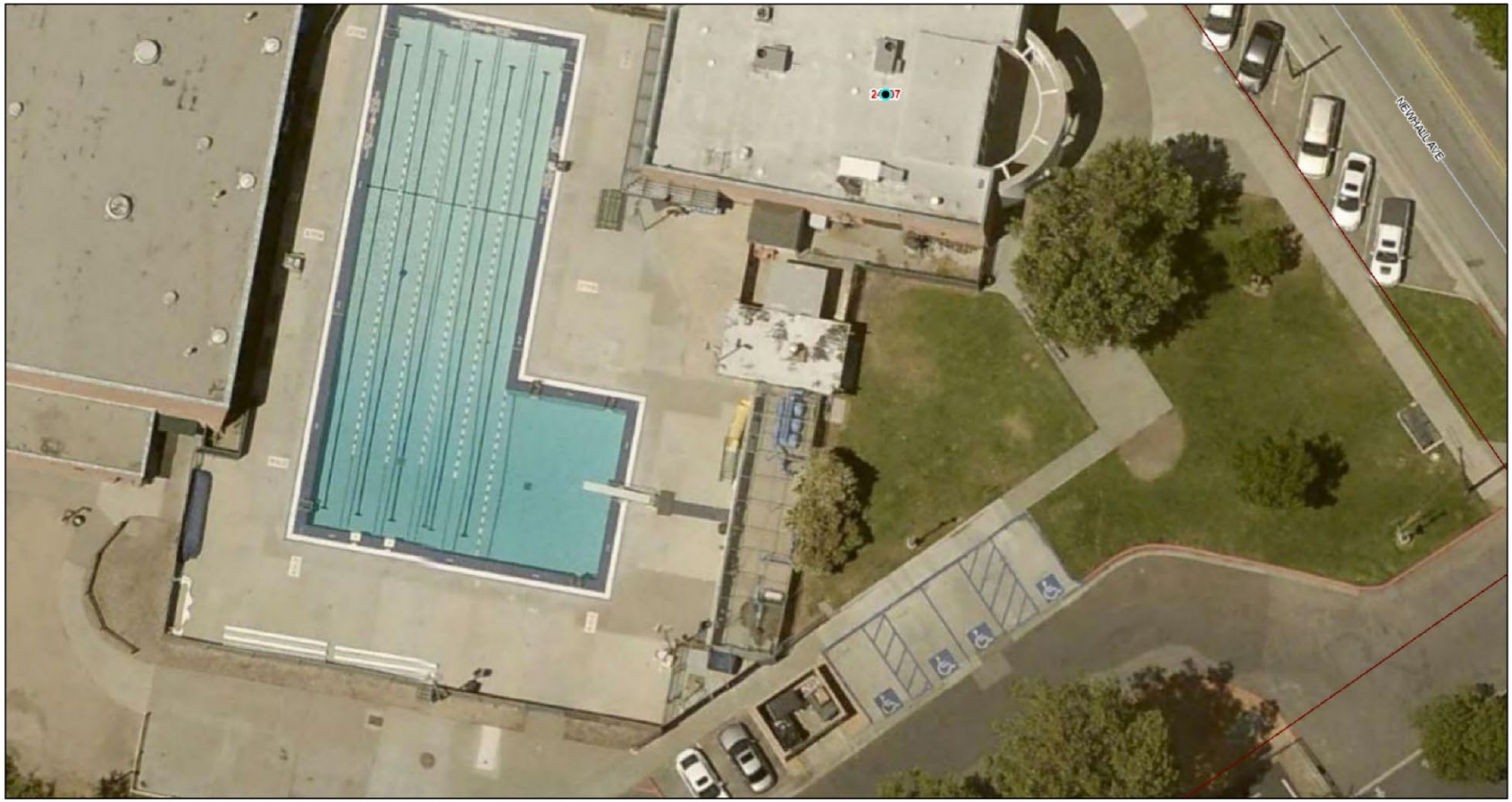

7/23/2025, 1:14:42 PM

Parcel Outlines

Site Address

Street Centerlines

Secondary

1:282

0 0 0.01 0.01 mi

0 0 0.01 0.02 km

Bureau of Land Management, Esri, HERE, Garmin, INCREMENT P, NGA, USGS

Data layers that appear on this map may or may not be accurate, current, or otherwise reliable. The City of Santa Clarita does not warrant the accuracy of the data and assumes no liability for any errors or omissions.

P2021 - NHP POOL PUMP ROOM

Attachment C

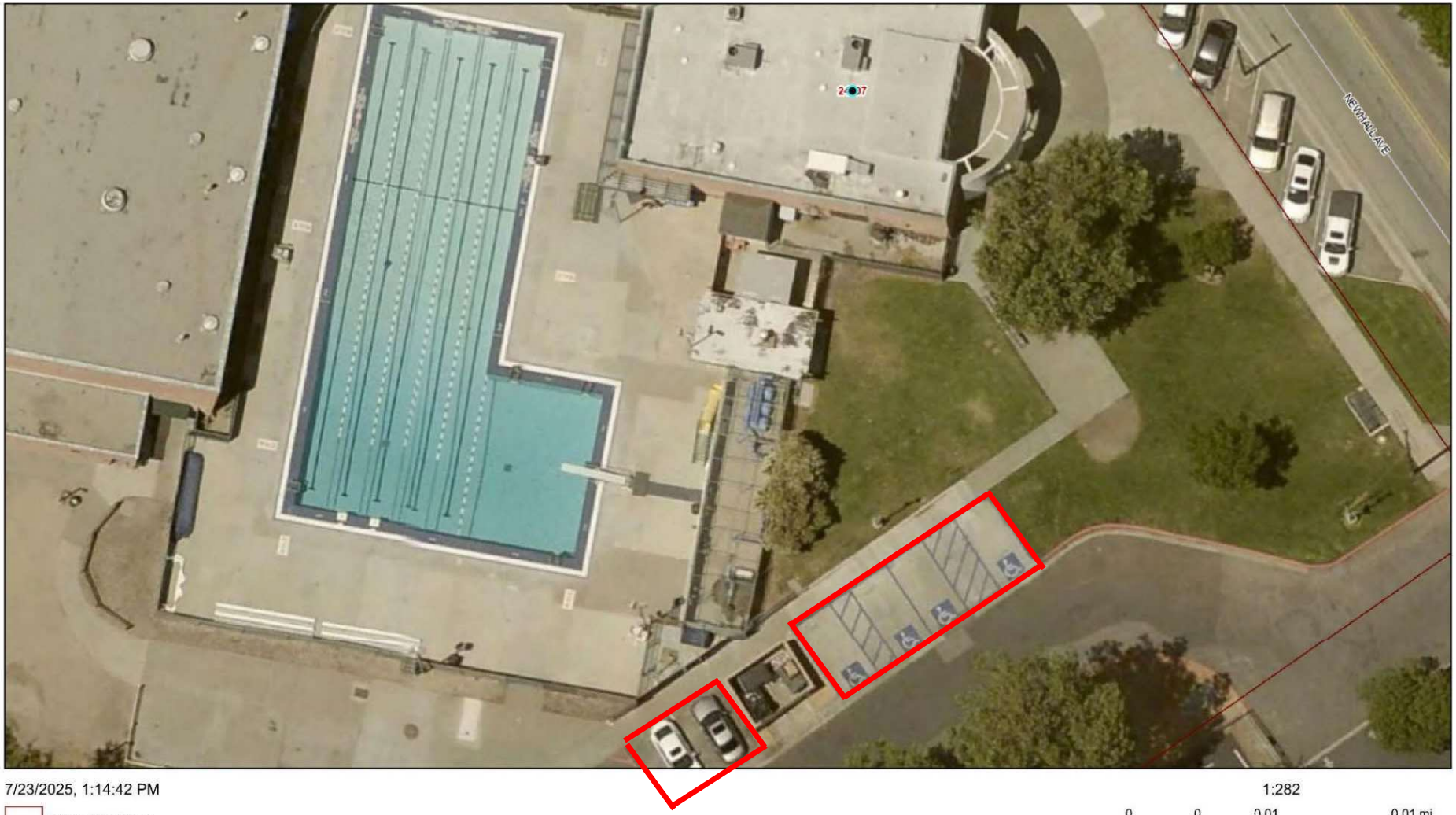

7/23/2025, 1:14:42 PM

Parcel Outlines

Site Address

Street Centerlines

Secondary

1:282

0 0 0.01 0.01 mi

0 0 0.01 0.02 km

Bureau of Land Management, Esri, HERE, Garmin, INCREMENT P, NGA, USGS

Data layers that appear on this map may or may not be accurate, current, or otherwise reliable. The City of Santa Clarita does not warrant the accuracy of the data and assumes no liability for any errors or omissions.

Attachment B

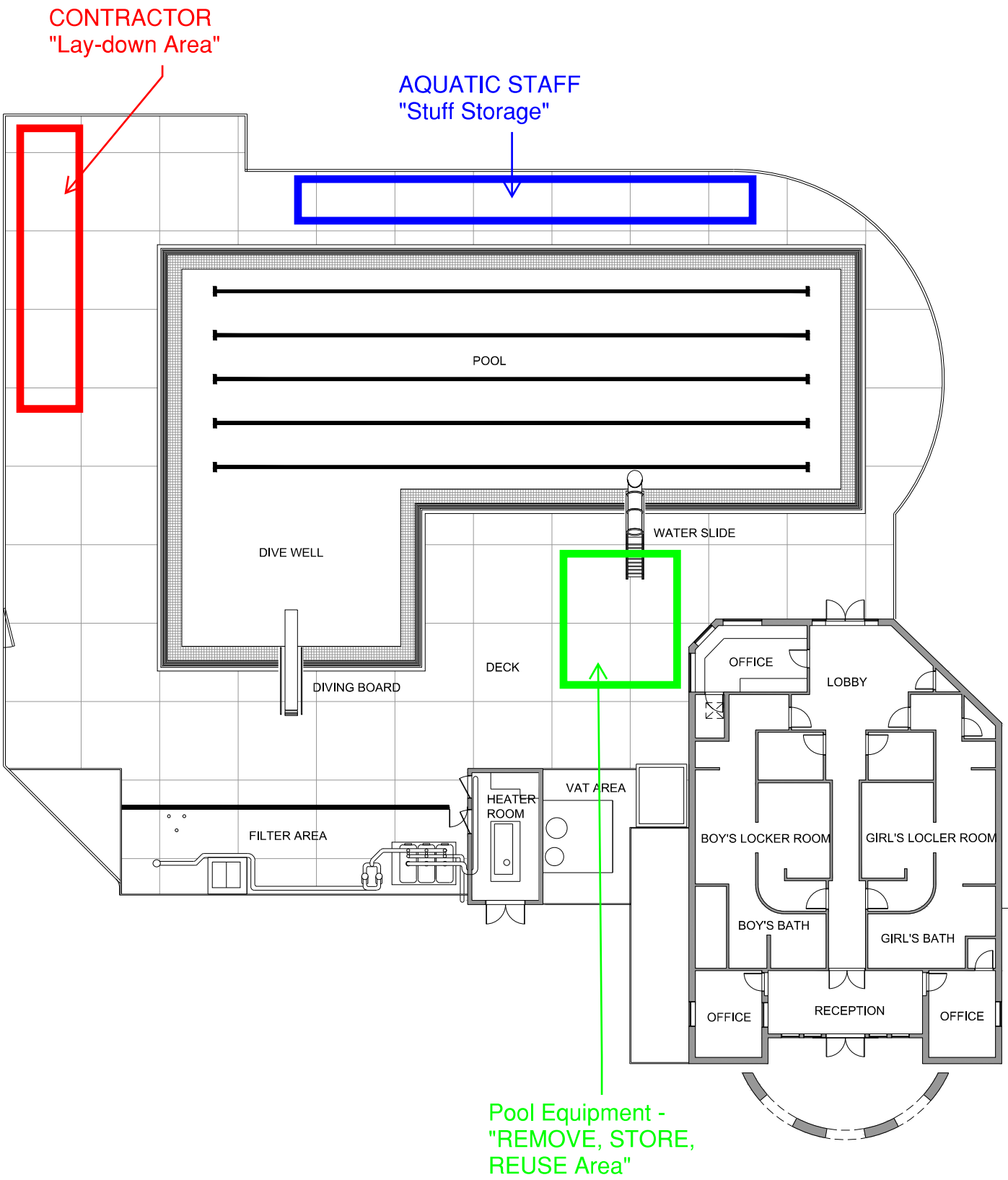

CONSTRUCTION AND DEMOLITION MATERIALS MANAGEMENT PLAN FORM

For questions, please contact the Environmental Services Division at (661) 286-4098

Project Information

Project Name: _____

Permit (BLD#): _____

Project Address: _____

Contact Information

Name: _____

Phone: _____

Email: _____

Construction and Demolition Materials (wood, metal, drywall, carpet, cardboard, etc.)	**Est. Qty. (tons)**	**Franchised Hauler/Self-Haul**
Total		

Inert Materials (concrete, sand, dirt, rock, gravel, clean fill, trees, stumps, etc.)*	**Est. Qty. (tons)**	**Franchised Hauler/Self-Haul/Reuse**
Total		

*Pursuant to 2022 California Green Building Standards Code, 100 percent of trees, stumps, rocks, and associated vegetation and soils resulting primarily from land clearing shall be reused or recycled. For a phased project, such material may be stockpiled on site until the storage site is developed. * If contamination by disease or pest infestation is suspected, contact the County Agricultural Commissioner and follow its direction for recycling or disposal of the material.

Learn more about Santa Clarita's C&D Ordinance by visiting city.sc/cdmpp or by scanning the QR code on the right

City of Santa Clarita Franchised Haulers

Temporary Bin and Roll-Off Box Service

All temporary bin and roll-off box services in the City of Santa Clarita are franchised by the following companies. If you are not self-hauling, you **must** use one of the haulers listed below:

America's Bin Company	(888) 500-9007	8832 Bradley Ave, Sun Valley
American Reclamation	(888)999-9330	4560 Doran St, Los Angeles
Athens Services	(888) 274-2074	9189 DeGarmo Ave, Sun Valley
Burrtec Waste Industries	(661) 222-2249	26000 Springbrook Ave, Ste 101, Santa Clarita
Consolidated Disposal Service, LLC DBA Republic Services	(562) 360-3932	9200 Glenoaks Blvd, Sun Valley
Rent-A-Bin	(818) 709-5599	20833 Santa Clara St, Santa Clarita
Triscenic Production Services, Inc	(818) 367-0243	27615 Ave Hopkins, Santa Clarita
Waste Management (WM)	(661) 259-2398	25772 Springbrook Ave, Santa Clarita

For Film and Television Production Services Only

Reel Waste and Recycling	(877) 588-7335 or (818) 361-2200	550 Glenoaks Blvd, San Fernando

Self-Haul

Contractors may self-haul their waste and recyclable materials if they possess a valid California contractor's license for their scope of work. For example, in order for a demolition contractor to self-haul, the demolition contractor shall be licensed with the California State Licensing Board to conduct demolition services. Waste hauling services may **not** be subcontracted.

General contractors who subcontract service shall ensure all subcontractors are either using a City franchised hauler or are eligible to self-haul. If you choose to self-haul, a separate self-haul verification form will be requested upon project finalization and submitted alongside all applicable weight tickets, scale reports and/or diversion reports. The self-haul verification form can be found at city.sc/cdmmp.

The City of Santa Clarita's Construction & Demolition Recycling Ordinance (05-09) requires all demolition projects, all commercial construction projects of new construction or additions over 1,000 square feet and all tenant improvements, alterations or new construction valued over $200,000, all new residential construction projects, and all residential additions and improvements that increase building area, volume, or size to recycle a minimum of 65 percent (65%) of all materials. There is a deposit required which is calculated at two percent (2%) of the highest valuation or $15,000 (whichever is less) for construction projects, and ten percent (10%) or $15,000 (whichever is less) for demolition projects.

It is the responsibility of the applicant to ensure the recycling requirements are met by working closely with the approved waste hauler(s). Please make sure you keep records from your waste hauler(s) or weight tickets from the C&D recycling center/landfill. These records will be necessary to prove your recycling tonnages and will be required to have your deposit returned at the end of the project. Please note deposits take up to three weeks to be refunded.

By signing below, you are certifying you have read and understand this requirement:

Applicant Signature _____ **Date** _____

Contractor Signature _____ **Date** _____
(if different than applicant above)